CITY OF FRISCO, TEXAS

SUBDIVISION ORDINANCE

Adopted July 7, 2009
Ordinance No. 09-07-38
Amended June 19, 2012
Ordinance No. 12-06-42

FRISCO
PROGRESS IN MOTION

City of Frisco
Subdivision Ordinance
Adoption and Summary of Amendments

Ordinance Number	Date of Adoption	Summary
09-07-38	July 7, 2009	New Subdivision Ordinance; repealed all previous Subdivision Ordinances and amendments
12-06-42	June 19, 2012	Ordinance amended in its entirety by incorporating new Engineering Standards as an Appendix. The terms, "Engineering Design Standards and Construction Details" and "Thoroughfare and Circulation Design Requirements" were replaced throughout the ordinance by the term, "Engineering Standards." Subsections 8.13 (a) through (d) and (f) through (j) were deleted; Subsection 8.13 (e) Private Streets was moved to Section 8.04 as a new subsection (c)

(This page intentionally left blank.)

Table of Contents

Section 1: General Subdivision Authority of the City 1-1

Section 1.01 Authority, Purpose & Applicability 1-1

Section 2: Authority of Decision-Makers 2-1

Section 2.01 General Provisions 2-1

Section 2.02 Responsible Official Assigned 2-2

Section 2.03 Director of Development Services 2-3

Section 2.04 Director of Engineering Services 2-3

Section 2.05 Director of Parks & Recreation 2-4

Section 2.06 City Manager & Other Officials 2-4

Section 2.07 Planning & Zoning Commission 2-5

Section 2.08 City Council 2-5

Section 3: Development Application Submittal & Processing Procedures 3-1

Section 3.01 Pre-Submittal Meeting 3-1

Section 3.02 General Application Contents 3-1

Section 3.03 Initiation, Complete Application & Expiration 3-2

Section 3.04 Application Processing, Action, and Notification Following Decision 3-4

Section 3.05 Public Hearings 3-5

Section 3.06 Amendments & Expiration 3-5

Section 3.07 Expiration for Projects Approved Prior to September 1, 2005 3-6

Section 4: Subdivision Procedures 4-1

Section 4.01 General Subdivision & Platting Procedures 4-1

Section 4.02 Preliminary Plats 4-2

Section 4.03 Final Plats 4-7

Section 4.04 Conveyance Plats 4-10

Section 4.05 Minor Plats 4-11

Section 4.06 Replats and Amending Plats – General Requirements 4-13

Section 4.07 Replats 4-14

Section 4.08 Amending Plats 4-15

Section 4.09 Plat Vacation 4-18

Section 5: Construction Plans & Procedures 5-1
Section 5.01 Construction Plans 5-1
Section 5.02 Pre-Construction Meeting 5-3
Section 5.03 Timing of Public Improvements 5-3
Section 5.04 Improvement Agreements and Security for Completion 5-4
Section 5.05 Inspection, Maintenance & Acceptance of Public Improvements 5-6

Section 6: (Reserved for Future Use) 6-1

Section 7: Special Extraterritorial Jurisdiction Policies & Regulations 7-1
Section 7.01 General Policies in the Extraterritorial Jurisdiction (ETJ) 7-1
Section 7.02 Collin & Denton County Regulations 7-2
Section 7.03 City Participation in Improvements in the Extraterritorial Jurisdiction (ETJ) 7-3

Section 8: Subdivision Requirements 8-1
Section 8.01 General Policies 8-1
Section 8.02 Water & Wastewater Requirements 8-5
Section 8.03 Drainage and Environmental Standards 8-11
Section 8.04 Street Requirements 8-16
Section 8.05 Alleys 8-21
Section 8.06 Thoroughfare Screening 8-21
Section 8.07 Sidewalks 8-25
Section 8.08 Driveways, Fire Lanes and Access Easements 8-25
Section 8.09 Easements, Lot & Block Design, Monuments, Subdivision Names, Franchise Utilities 8-26
Section 8.10 Subdivision Amenities 8-29
Section 8.11 Homeowners' Association (HOA) Requirements 8-30
Section 8.12 Parks & Open Spaces 8-35

Section 9: Relief Procedures 9-1
Section 9.01 Petition for Waivers 9-1
Section 9.02 Proportionality Appeal 9-4
Section 9.03 Vested Rights Petition 9-8

Section 10: Definitions 10-1

Section 10.01 Usage & Interpretation 10-1

Section 10.02 Definitions 10-1

Section 11: Amendments; Fees; Violations; Conflicts 11-1

Section 11.01 Amendments 11-1

Section 11.02 Filing Fees & Charges 11-1

Appendix: Diagrams & Tables

Table 2.01-1: Responsible Officials, Initial Decision-Makers & Appellate Decision-Makers A-1

Diagram 8.01-1: Median & Cross Access A-3

Diagram 8.03-1: Major Creeks - Map A-4

Diagram 8.03-2: Major Creek – Cross Section A-5

Diagram 8.03-3: Streets Adjacent to Major Creeks A-6

Diagram 8.03-4: Cul-de-Sacs Adjacent to Major Creeks A-7

Diagram 8.03-5: Fencing Options for Lots Abutting Major Creeks A-8

Table 8.06-1: Thoroughfare Screening Options A-9

Diagram 8.06-1: Thoroughfare Screening Option 1 ..... A-10

Diagram 8.06-2(a): Thoroughfare Screening Option 2(a) A-11

Diagram 8.06-2(b): Thoroughfare Screening Option 2(b) A-12

Diagram 8.06-2(c): Thoroughfare Screening Option 2(c) A-13

Diagram 8.06-3: Thoroughfare Screening Option 3 ..... A-14

Diagram 8.06-4(a): Thoroughfare Screening Option 4(a) A-15

Diagram 8.06-4(b): Thoroughfare Screening Option 4(b) A-16

Diagram 8.09-1: Flag Lots A-17

Diagram 8.09-2: Determining Lot Depth on an Irregular-Shaped Lot A-18

Diagram 8.09-3: Lot Street Frontage – Curved Streets A-19

Diagram 8.09-4: Lot Street Frontage – Cul-de-Sac & Eyebrow Lots A-20

Diagram 8.10-1: Centrally Located Amenity Center A-21

Diagram 8.12-1: Access & Lot Orientation to Parks and/or Open Space A-22

Table 9.01-1: Minor Waivers – Initial Decision-Makers & Appellate Decision-Makers A-23

Engineering Standards A-24

(This page intentionally left blank.)

SECTION 1: GENERAL SUBDIVISION AUTHORITY OF THE CITY

SECTION 1.01 AUTHORITY, PURPOSE & APPLICABILITY

(a) Authority. The regulations of this Subdivision Ordinance are authorized under the authority of Texas Local Government Code, Chapter 212 (including Subchapter B) and the City's charter. The provisions of this Subdivision Ordinance expressly extend to all areas inside the City limits and throughout the City's extraterritorial jurisdiction (ETJ), as either may be adjusted in the future, and as provided in the City's interlocal agreements with Collin and Denton Counties in accordance with Chapter 242 of the Texas Local Government Code.

(b) Purpose.

(1) The development and subdivision of land, as they affect a community's quality of life, are activities for which regulation is a valid function of municipal government. The regulations contained within this Subdivision Ordinance are intended to protect the interests of the public and of private parties by granting certain rights and privileges. The requirements in this Ordinance are also intended to establish a fair and rational procedure for developing and subdividing land such that land will be developed in accordance with existing physical, social, economic and environmental conditions.

(2) The provisions of this Ordinance are intended to implement standards and requirements provided for herein, and shall be requirements for the platting and developing of subdivisions within the City and its ETJ.

(3) The provisions of this Ordinance are intended to implement the following objectives:

a. Promote the development and the utilization of land in a manner that provides an attractive and high-quality community environment in accordance with the Comprehensive Plan and the Zoning Ordinance of the City;

b. Guide and assist property owners and applicants in the correct procedures to be followed, and to inform them of the required standards;

c. Protect the public interest by having standards for, but not limited to, the location, design, class and type of streets, sidewalks, trails, alleys, utilities and essential public services;

d. Assist orderly, efficient and coordinated development within the City's limits and its ETJ;

e. Integrate the development of various tracts of land into the community, and coordinate the future development of adjoining tracts;

h. Promote the most efficient and beneficial provision of public facilities and services for each tract being subdivided;

i. Provide for compatible relationships between land uses and buildings;

j. Provide for efficient traffic circulation throughout the municipality;

k. Provide for pedestrian circulation that is appropriate for the various uses of land and buildings;

l. Minimize pollution of the air, streams, bodies of water, and aquifers; promote the adequacy of storm drainage facilities; minimize erosion; safeguard both surface and groundwater supplies, as well as natural resources and endangered or threatened plant and animal life; and encourage the wise use and management of natural resources throughout the municipality in order to preserve the integrity, stability and beauty of the community and the value of the land;

m. Preserve the natural beauty and topography of public and private properties by encouraging where possible that natural features and land forms are incorporated into developments as amenities;

n. Establish adequate and accurate records of land subdivision;

o. Provide for public or private facilities that are available and will have sufficient capacity to serve proposed and future developments and citizens within the City and its ETJ;

p. Provide for adequate light, air and privacy; secure safety from fire, flood and other dangers; and prevent overcrowding of the land and undue congestion of population;

q. Encourage the development of residential areas that incorporate a range of housing and lifestyle choices.

(c) Applicability.

(1) The provisions of this Subdivision Ordinance apply to any non-exempt (see Section 4.01(c)) division of land, combination of separate land parcels, and/or development of land within the corporate boundaries of the City and within its ETJ.

(2) No permit shall be issued for any building or structure on a property until a plat has been approved and filed for record unless specifically exempted herein (see Sections 4.01(c) and 5.02).

(d) Subdivision Rules. The provisions of this Subdivision Ordinance, the standards governing constructed facilities applicable to plats in other portions of the Municipal Code of Ordinances, and the technical standards contained in the *Engineering Standards*, constitute the subdivision rules of the City, which apply to applications for plat approval inside City limits and within the City's ETJ.

(e) Engineering Standards. The City Council hereby delegates all future authority to draft, amend, approve and/or adopt any and all Engineering Standards to the City Manager, or his/her designee, subsequent to the adoption of the Engineering Standards in Ordinance No. 12-06-42.

The Engineering Standards may be drafted, amended, approved and/or adopted, from time to time, at the discretion and determination of the City Manager, or his/her designee. As Engineering Standards are drafted, amended, approved and/or adopted by the City Manager, or his/her designee, said standards shall be included and substituted for the existing Engineering Standards,

and shall thereafter have the same force of law and effect as if originally adopted hereby. Prior to the adoption of any new or amended provision within the Engineering Standards, such new or amended provision shall be posted on the Department of Engineering Services web site for a minimum of thirty (30) calendar days. The Department of Engineering Services shall also provide notice of any new or amended provision within the Engineering Standards on the City's website for a minimum of thirty (30) calendar days prior to the enforcement of such new or amended provisions. Any individual may request to receive written notice of any new or amended provision to the Engineering Standards by providing said request in writing to the Director of Engineering. A copy of the current Engineering Standards shall be kept on file and available for review with the Department of Engineering office and on the Department of Engineering website.

(f) Compliance with City Plans and Ordinances Required. Compliance with all City ordinances pertaining to the subdivision and development of land, and the Comprehensive Plan (where applicable), shall be required prior to approval of any application pursuant to this Ordinance. All such ordinances and the Comprehensive Plan shall be construed to mean those documents as they exist or may be amended. It is the property owner's responsibility to be familiar with, and to comply with, City ordinances, the Comprehensive Plan, and the provisions of this Ordinance. Applicable City ordinances and plans with which all applications must comply include, but are not limited to, the following:

1. Comprehensive Plan (including all associated maps and plans);
2. Zoning Ordinance;
3. Building Codes;
4. Flood Damage Prevention Ordinance *(Ord. No. 12-06-42)*;
5. International Fire Code;
6. Other Applicable portions of the Municipal Code of Ordinances;
7. Impact Fee Ordinance;
8. Park Dedication Ordinance;
9. Engineering Documents including:
    - *Engineering Standards,* and
    - Other development-related engineering standards.
10. Federal, State and Local Environmental Regulations.

(This page intentionally left blank.)

SECTION 2: AUTHORITY OF DECISION-MAKERS

SECTION 2.01 GENERAL PROVISIONS

(a) Source of Authority. Authority under this Subdivision Ordinance shall be vested in and delegated to the officials and decision-makers designated in this Section 2 and under the City's charter, the constitution and laws of the State of Texas, and the Municipal Code. This authority shall be deemed supplemental to any other authority lawfully conferred upon the officials and decision-makers. The omission of a citation in this Subdivision Ordinance to any authority conferred upon the officials and decision-makers under the City's charter, the constitution or laws of the State of Texas, or the Municipal Code, or the failure to identify in this article authority conferred by other provisions of this Subdivision Ordinance, shall not be construed as limiting the actions of such officials and decision-makers taken in accordance with and in reliance upon such authority.

(b) Implied Authority. The officials and decision-makers shall have all implied authority necessary to carry out the duties and responsibilities expressly delegated by Chapter 212 of the Texas Local Government Code and this Subdivision Ordinance, to the extent that the implied authority is not in conflict with the expressly delegated authority.

(c) Limitation on Authority.

(1) City Policy. It is the policy of the City that the standards and procedures applicable to development of property within the City limits and within the City's ETJ are as stated in this Subdivision Ordinance, notwithstanding any representation by any City official summarizing, paraphrasing or otherwise interpreting such standards to the contrary, whether generally or as applied to development of specific property.

(2) Representations. The applicant shall not rely on any representation made by an employee of the City, a member of an appointed board or commission, or a member of the City Council concerning the likelihood of an outcome of that official's decision or the decision of an appointed board or commission or the City Council, on any application that has yet to be filed or is pending before the City. An official may, however, convey information concerning that official's position on a pending application in accordance with his/her role as the responsible official (Section 2.02) for such application or as the City staff contact person.

(3) Effect of Comprehensive Plan, Ordinance or Development Standard on Liability Claims. The City's approval of an application under the standards and procedures of this Subdivision Ordinance does not guarantee or ensure that development of the property in accordance with the standards will prevent, minimize or mitigate harm to adjoining property. A person who undertakes development activities shall not rely on the City's approval of an application as ensuring that the development activities will not result in harm to adjoining property. The regulations contained in this Subdivision Ordinance constitute an exercise of the City's governmental authority, and approval of an application shall not give rise to any liability on the part of the City or its officers, agents and employees, nor will an approval release the

applicant from any liability for harm arising out of development of the property under applicable law.

(4) No Waivers. Except as expressly provided for in this Subdivision Ordinance, no official, board or commission of the City, or the City Council, shall have authority to waive any requirement or standard for an application. Any attempted waiver of a requirement or standard for an application in contravention of this Section shall hereby be deemed null and void, and, upon discovery, shall be grounds for revocation of a permit or approved application.

(d) **Conflict in Authority.** If any of the provisions of this Subdivision Ordinance are in apparent conflict, the Director of Development Services shall, after due consideration as to the purpose and intent of each conflicting provision, make a determination as to which provision shall apply. The Director of Development Services shall make every effort to be fair and consistent in such interpretations, and his/her decision may be appealed to the City Manager (see Section 2.06), unless otherwise noted within.

SECTION 2.02 RESPONSIBLE OFFICIAL ASSIGNED

(a) **Responsible Official.** The responsible official shall be the Director of a designated City department who is assigned responsibility under this Subdivision Ordinance for taking the following actions with regard to a particular type of application authorized under this Subdivision Ordinance:

(1) Accepting the application for filing, and processing the application;

(2) Reviewing and making recommendations concerning the application;

(3) Seeking advice of other City departments, and coordinating any recommendations from such departments concerning the application;

(4) Determining a request for exemption;

(5) Preparing reports to and advising any board, commission or the City Council that has responsibility for making recommendations on or deciding the application;

(6) Promulgating additional or modified policies, standards and administrative rules for adoption by the City Council that apply to the application;

(7) Initiating enforcement actions concerning compliance with the standards applicable to the application and the conditions imposed thereon; and

(8) Taking all other actions necessary for administration of the provisions of this Subdivision Ordinance with respect to the application or petition.

(b) **Delegation.** The responsible official may delegate the official's authority under this Subdivision Ordinance to subordinate officials, who shall thereupon be deemed the responsible official for purposes of carrying out the delegated duties.

SECTION 2.03 DIRECTOR OF DEVELOPMENT SERVICES

(a) **Responsible Official.** The Director of Development Services is the responsible official for the following types of applications, waivers and petitions:

(1) Review and approval for any type of plat;

(2) Waiver of Right to 30-Day Action;

(3) Extension of a plat approval;

(4) Major and Minor Waivers related to an application;

(5) Appeal of a decision on any application for which the Director of Development Services is the responsible official;

(6) Appeal of a decision on any application for which the Commission is the initial decision-making body; and

(7) Vested rights petition for any application when the Director of Development Services is the responsible official.

(b) **Initial Decision-Maker.** The Director of Development Services is the initial decision-maker for the following types of applications (subject to any appeal):

(1) Minor Plat, as outlined in Section 4.05;

(2) Amending Plat, as outlined in Section 4.08;

(3) Extension for a Preliminary Plat approval, as outlined in Section 4.02(j);

(4) Certain types of Minor Waivers, as outlined in Section 9.01;

(5) Vested rights petition for an application for which the Director of Development Services is the initial decision-maker;

(6) Building Permit; and

(7) Certificate of Occupancy.

SECTION 2.04 DIRECTOR OF ENGINEERING SERVICES

(a) **Responsible Official.** The Director of Engineering Services is the responsible official for the following types of applications:

(1) Review of Construction Plans, including all engineering plans and related construction tasks, including approval of contracts for public improvements, as outlined in Section 5.01;

(2) Extension for Construction Plans, as outlined in Section 5.01(h);

(3) Construction Release, as outlined in Section 5.01(i);

(4) Improvement Agreement, as outlined in Section 5.04;

(5) Appeal related to an application for which the Director of Engineering Services is the responsible official;

(6) Certain types of Minor Waivers (related to construction requirements), as outlined in Section 9.01;

(7) Vested rights petition for an application for which the Director of Engineering Services is the responsible official; and

(8) Petition for a proportionality appeal, as outlined in Section 9.02.

(b) Initial Decision-Maker. The Director of Engineering Services is the initial decision-maker for the following types of applications (subject to any appeal):

(1) Approval of Construction Plans, including all engineering plans and related construction management tasks, including approval of contracts for public improvements;

(2) Construction Release;

(3) Extension for Construction Plans approval;

(4) Certain types of Minor Waivers (related to construction requirements), as outlined in Section 9.01; and

(5) Vested rights petition for an application for which the Director of Engineering Services is the initial decision-maker.

SECTION 2.05 DIRECTOR OF PARKS & RECREATION

(a) Responsible Official and Initial Decision-Maker. The Director of Parks & Recreation is the responsible official for the review and recommendation to the Parks & Recreation Board, and for carrying out the Parks & Recreation Board's decisions, on the following types of applications:

(1) Acceptance of fees in lieu of parkland dedication;

(2) The portion of an application showing where park land, including trails, is to be dedicated, and whether such dedication is acceptable;

(3) Any other portions of applications showing items required by Section 8.12.

SECTION 2.06 CITY MANAGER & OTHER OFFICIALS

(a) City Manager.

(1) Appeals. The City Manager is the appellate decision-maker for any appeal for which a City staff person is the initial decision-maker, subject to further appeal as may be provided for in any subsequent sections of this Subdivision Ordinance.

(b) Fire Chief. No provision contained in this Subdivision Ordinance shall be deemed or interpreted as a limitation on the Fire Chief's exclusive authority as set forth in the International Fire Code.

(c) Other City Officials. The City Attorney and any other official delegated responsibilities under this Subdivision Ordinance or other provisions of the Municipal Code are authorized to take all actions

necessary to carry out their responsibilities in accordance with the requirements and limitations prescribed herein.

SECTION 2.07 PLANNING & ZONING COMMISSION

(a) **Organization, Powers & Duties.** The Planning & Zoning Commission (also referred to as Commission) shall hold meetings and have the powers and duties as provided for in the Municipal Code of the City (Part One, Article IX. Planning & Zoning Commission), and as authorized by Chapter 211 or 212 of the Texas Local Government Code. Such powers and duties shall include exercising all the authority and control conferred by law relating to platting.

(b) **Duties of the Director of Development Services.** The Director of Development Services shall act as the staff liaison to the Commission, and shall abide by the City's usual record-keeping and retention policies for boards and commissions, as amended, in maintaining records of the Commission's meetings and actions.

(c) **Authority for Deciding Applications.** The Commission shall have the authority to act on the following types of applications:

(1) Preliminary Plat;

(2) Final Plat;

(3) All other types of plats, with the exception of Minor Plats and Amending Plats (which may be decided by the Director of Development Services unless deferred to the Commission).

(d) **Authority for Deciding Appeals.** The Commission shall hear and decide the following appeals:

(1) Any Major Waiver petition on an application for a Preliminary Plat, Final Plat or Replat, except when such Waiver is a proportionality appeal, in which case Section 9.02 of this Subdivision Ordinance shall apply;

(2) Minor Plat or Amended Plat that is deferred by the Director of Development Services, as outlined in Section 4.05(h) or Section 4.08(i), as applicable;

(3) A vested rights petition that is deferred by the Director of Development Services or the Director of Engineering Services, as outlined in Section 9.03(g)(3);

(4) Any other appeal so authorized by this Ordinance.

SECTION 2.08 CITY COUNCIL

(a) **Authority for Deciding Applications and Appeals.** The City Council shall hear and decide appeals from decisions made by the Commission when such appeals are authorized by this Ordinance.

(This page intentionally left blank.)

SECTION 3: DEVELOPMENT APPLICATION SUBMITTAL & PROCESSING PROCEDURES

SECTION 3.01 PRE-SUBMITTAL MEETING

(a) **Option to Meet With City Staff.** Prior to the official submission of an application for review and consideration, the applicant(s) has the option to request and attend a Pre-Submittal Meeting with City staff.

(b) **Meeting Request.** To schedule a Pre-Submittal Meeting, the applicant shall make a request for a Pre-Submittal Meeting with Development Services, and such request shall describe the type of development desired and/or the type of application that the applicant intends to submit. The applicant shall then be notified by Development Services of the meeting time and place for the requested meeting.

(c) **Vested Rights.** There shall be no vested rights based on a Pre-Submittal Meeting.

(d) **Effect.** Following the Pre-Submittal Meeting, the applicant may proceed with the submittal of an application.

SECTION 3.02 GENERAL APPLICATION CONTENTS

(a) **Application Contents Generally.** All applications shall be submitted on a form supplied by Development Services with the required information as stated on the application form. Incomplete applications shall not be accepted for filing and shall not be considered officially filed.

(1) Application Timing.

a. Development Services shall establish submittal deadlines for all applications decided by the Director of Development Services and by the Commission.

b. An application must be considered complete and officially filed in accordance with Section 3.03 of this Subdivision Ordinance prior to being processed for review and consideration.

(2) Fees Required. Every application shall be accompanied by the prescribed fees set forth in the City's fee schedule, as approved by City Council and as may be amended from time to time. The prescribed fee is not refundable.

(3) Delinquent City Taxes on Property. An application shall not be deemed complete, nor shall it be approved, if there are delinquent City taxes on the subject property.

(b) **Modification of Applications Prior to Approval.** The applicant may modify any complete application following its filing and prior to the expiration of the period during which the City is required to act on the application.

(1) Modifications Requested by the City. If the modification is for revisions requested by the City, and the modification is received at least eleven (11) calendar days prior to the time scheduled for decision on the application, the application shall be decided within the original period for decision (from the original official filing date) prescribed by this Subdivision Ordinance.

(2) Other Modifications In all other instances (e.g., when the applicant chooses to submit a revised application on his own accord because of a change in development decisions), submittal of a modified application shall be accompanied by a properly executed Waiver of Right to 30-Day Action (see Section 3.03(e)) in order to allow City staff adequate time to review the new information and modifications, and shall extend the time for deciding the application for a period equal to the time specified in this Subdivision Ordinance to decide the original application, commencing on the official filing date of the modified application.

SECTION 3.03 INITIATION, COMPLETE APPLICATION & EXPIRATION

(a) **Initiation by Owner.** An application required under this Subdivision Ordinance may be initiated only by the owner of the land subject to the application, or by the owner's duly authorized representative. If the applicant is a representative of the property owner, the application shall include a written and Notarized statement from the property owner, such as a duly executed "Power of Attorney", authorizing the representative to file the application on the owner's behalf.

(b) **Applicability.** The procedures within this Section 3 shall apply to all applications that are required by the City and submitted in accordance with this Subdivision Ordinance.

(c) **Determination of Completeness.** Every application shall be subject to a determination of completeness by the responsible official for processing the application. An application must be complete in order to be accepted for review by the City.

(1) The application shall only be accepted by the responsible official for processing when it is accompanied by all documents required by, and prepared in accordance with, the requirements of this Subdivision Ordinance. A typographical error shall not, by itself, constitute an incomplete application.

(2) A determination of completeness shall not constitute a determination of compliance with the substantive requirements of this Subdivision Ordinance.

(3) A determination of completeness of an application shall be conducted in accordance with the following procedures:

a. The applicant shall be notified in writing within ten (10) business days if the submitted application is incomplete. Such notice shall be served by depositing it in the U.S. Postal Service, or by electronic mail transmission, before the tenth (10th) business day following submission of the application.

b. If the application is determined to be incomplete, the notification shall specify the documents or other information needed to complete the application, and shall state the date the application will expire (see Section 3.03(f)) if the documents or other information are not provided to the City.

c. An application shall be deemed complete on the eleventh (11th) business day after the application has been received if notice is not served in accordance with Section 3.03(c)(3)a.

d. If the application is determined to be complete, the application shall be processed as prescribed by this Subdivision Ordinance.

(4) It is not guaranteed that an accepted, complete application will be approved, if after the application is deemed complete it is determined that the application does not comply with this Subdivision Ordinance.

(d) Re-Submittal After Notification of Incompleteness. If the application is re-submitted after a notification of incompleteness, the application shall be processed upon receipt of the re-submittal. An additional determination of completeness shall be made thereafter as described in Section 3.03(c). The statutory 30-day time frame for plat approvals shall begin when the City deems the application is complete (see Section 3.03(g)).

(e) Waiver of Right to 30-Day Action. The Director of Development Services shall be the responsible official for a Waiver of Right to 30-Day Action.

(1) Request. An applicant may submit in writing a Waiver of Right to 30-Day Action in relation to the decision time for plats of thirty (30) days, as mandated by State law.

(2) Received. If the applicant is requesting Waiver of Right to 30-Day Action, such Waiver of Right to 30-Day Action must be received by the Director of Development Services on or before the seventh (7th) calendar day prior to the Planning & Zoning Commission meeting at which action would have to be taken (based on the 30-day requirement in State law) on the application. Waiver requests that are not received by that day shall not be considered properly submitted, and action shall be taken on the application at such meeting as scheduled.

(3) Requirements Maintained. Submission of a Waiver of Right to 30-Day Action, and acceptance of such Waiver by the City as part of an application, shall not be deemed in any way a Waiver to any requirement within this Subdivision Ordinance. A Waiver from requirements herein is a separate and distinct process (see Section 9.01).

(f) Expiration of Application.

(1) The application shall automatically expire at the close of business on the forty-fifth (45th) calendar day after the date the application is received, and it will be returned to the applicant together with any accompanying documents and materials, if:

a. The City provides to the applicant, not later than the tenth (10th) business day after the date the application is filed, written notice that specifies the necessary documents or other information, and the date the application will expire if the documents or other information is not provided; and

b. The applicant fails to provide the specified documents or other information necessary to comply with the City's requirements relating to the application within the time provided in the notification.

(2) An accepted application for which there has been no action taken by an applicant for ninety (90) calendar days shall be deemed expired and closed on the City's initiative.

a. If the application is of a type that can be administratively approved or denied, the responsible official shall notify the applicant in writing that the application is officially denied due to inaction.

b. If the application is of a type that must be acted upon by the Commission, the responsible official shall coordinate the application being placed on the agenda of the Commission, as applicable, and the application shall then be formally denied by an official action of the Commission, as applicable. The responsible official shall notify the applicant in writing that the application has been officially denied by the Commission due to inaction.

(g) Official Filing Date. The 30-day time period established by State law, and by this Subdivision Ordinance, for processing and deciding an application shall commence on the official filing date. The official filing date shall be defined as the date the application is deemed complete by the responsible official in the manner prescribed by Section 3.03(c).

SECTION 3.04 APPLICATION PROCESSING, ACTION, AND NOTIFICATION FOLLOWING DECISION

(a) Action By Responsible Official. The responsible official for an application shall initiate internal (i.e., City) review and assessment of the application following the City's development review procedures. The responsible official shall also, to the extent possible, work with the applicant by advising on and communicating revisions that may be necessary to bring the application into compliance with City regulations in preparation for consideration by the appropriate decision-maker.

(b) Decision. The decision-maker for the application shall approve, approve with conditions, or deny the application within the time period prescribed by this Subdivision Ordinance.

(c) Conditions Attached. The decision-maker may attach such conditions to the approval of an application as are reasonably necessary to ensure compliance with all applicable requirements of this Subdivision Ordinance.

(d) Notification of Decision. The City shall send written notice within fourteen (14) calendar days following the date of a decision on an application.

(e) Notification of Appeal. Whenever appeal is taken from a final decision on an application following a public hearing, or whenever the City is to consider revocation of an application which was obtained following a public hearing, personal notice of the appeal or revocation proceeding shall be provided to the applicant.

SECTION 3.05 PUBLIC HEARINGS

(a) **Setting the Hearing.** When the responsible official determines that an application is complete and that a public hearing is required by this Subdivision Ordinance (see Sections 4.07(b) and 4.09(c)) or by State law, the official shall cause notice of such hearing to be prepared and made in accordance with State law. The time set for the hearing shall conform to the time periods required by Sections 4.07(b) and 4.09(c) in this Subdivision Ordinance and by State law.

(b) **Conduct of the Hearing.** The public hearing shall be conducted in accordance with State law. Any person may appear at the public hearing and submit evidence, either individually or as a representative of an organization. Each person who appears at a public hearing shall state his or her name and address, and if appearing on behalf of an organization, state the name of the organization for the record.

(c) **Record of Proceedings.** The board/commission conducting the hearing shall record the proceedings using standard municipal record-keeping procedures.

SECTION 3.06 AMENDMENTS & EXPIRATION

(a) **Amendments/Revisions to an Approved Application.** Unless another method is expressly provided by this Subdivision Ordinance, any request to amend or revise an approved application shall be considered a new application, which must be decided in accordance with the procedures governing the original application and the standards in effect at the time such new application is filed with the City.

(b) **Time of Expiration.**

(1) Unless otherwise expressly provided by this Subdivision Ordinance, an approved application shall automatically expire two (2) years following the approval date of the application (see Section 5.01(g) for expiration of Construction Plans), and shall become null and void, and all activities under the application thereafter shall be deemed in violation of this Subdivision Ordinance, if:

a. The applicant fails to satisfy any condition that was imposed by this Subdivision Ordinance or as part of the approval of the application or that was made under the terms of any Development Agreement, within the time limits established for satisfaction of such condition or term; or

b. The applicant fails to submit a subsequent complete application required by this Subdivision Ordinance within the time so required; or

c. An Improvement Agreement (Section 5.04) is not approved for the development.

(2) If no time limit for satisfaction of conditions is specified in the decision on the application, the time shall be presumed to be two (2) years following the date the application was approved, except as provided in Section 3.07.

(3) Except as provided in Section 3.07, or upon a different date being determined pursuant to a vested rights petition, an application approved prior to the effective date of this Subdivision Ordinance shall expire in accordance with the terms of the regulations in effect at the time the application was filed.

(c) **Effect of Expiration.** Upon the expiration of an approved application, all previously approved applications for the same land shall also expire on the expiration date if the filing of an application was required to avoid expiration for the previously approved application(s), except as provided in Section 3.07. Thereafter, a new application must be submitted for consideration and approval subject to regulations in effect at the time the new application is filed.

SECTION 3.07 EXPIRATION FOR PROJECTS APPROVED PRIOR TO SEPTEMBER 1, 2005

(a) **Two-Year Expiration Established.** Notwithstanding any other provision of this Subdivision Ordinance, for any approved application for which no expiration date was in effect on September 1, 2005, an expiration date of two (2) years following the date of approval of the application shall apply, unless the applicant files a written petition before such date for a vested rights determination pursuant to Section 9.03 alleging that progress has been made toward completion of the project for which the application subject to expiration was filed. If a vested rights petition is timely filed and subsequently approved, the City Council shall determine the expiration date of the application in deciding the petition.

(b) **Five-Year Expiration Established.** Notwithstanding any other provision of this Subdivision Ordinance, once an application has expired under Section 3.07(a), all previously approved applications for the same land also shall expire no later than five (5) years following the date of filing of the first application for the project for which the expired application was filed, unless the applicant files a written petition before such date for a vested rights determination pursuant to Section 9.03. If a vested rights petition is timely filed and subsequently approved, the City Council shall determine the expiration date of the previously approved applications in deciding the petition.

SECTION 4: SUBDIVISION PROCEDURES

SECTION 4.01 GENERAL SUBDIVISION & PLATTING PROCEDURES

(a) Types of Plats Required. A Final Plat or a Minor Plat shall be approved prior to any land division that is subject to these regulations and prior to commencement of any new development or construction project.

(b) Replat. A Replat in accordance with State Law and the provisions of Sections 4.06 and 4.07 shall be required any time a platted, recorded lot is further divided or expanded, thereby changing the boundary and dimensions of the property. In the case of minor revisions to recorded plats or lots, a Minor Plat or Amending Plat may also be utilized if allowed by State Law and if in accordance with Section 4.05 and Sections 4.06 and 4.08, respectively.

(c) Exemptions. The following land divisions are exempt from the requirements of this Subdivision Ordinance that apply to plats:

(1) Use of existing cemeteries complying with all State and local laws and regulations; and

(2) A division of land created by order of a court of competent jurisdiction, provided however, that prior to construction of improvements, a plat meeting the requirements of this Ordinance shall be approved and recorded prior to the issuance of permits.

(d) Zoning. Inside the City limits of the City, the following shall apply:

(1) Conformance with Existing Zoning. All applications shall be in conformance with the existing zoning on the property (if applicable).

(2) Request to Rezone First. If an applicant seeks to amend the zoning for the property, the request to rezone the land shall be submitted and approved prior to acceptance of an application for filing unless as otherwise provided below.

a. The applicant may request approval from the Director of Development Services to submit an application simultaneous with the zoning change request, in which case the application for the zoning amendment shall be acted upon first, and provided that the application is accompanied by a properly executed Waiver of Right to 30-Day Action (due to the more lengthy time frame necessary to advertise and process zoning applications).

b. In the event that the requested zoning amendment is denied, the application shall also be rejected or denied.

(3) Site Plan Approval. Where Site Plan approval is required by the Zoning Ordinance prior to development, no application for a Final Plat approval shall be accepted for filing until a Preliminary Site Plan has been approved for the land subject to the proposed plat.

(e) General Stages of Plat Approval & Staff Review.

(1) Two-Stage Process. The platting process typically involves two approval stages: Submission and approval of a Preliminary Plat (refer to Section 4.02), and subsequent submission and approval of a Final Plat (refer to Section 4.03). However:

a. An applicant may proceed with a Final Plat without an approved Preliminary Plat whenever:

1. A Minor Plat (Section 4.05) is submitted; or
2. A Preliminary Site Plan for a multi-family, single-family attached or nonresidential development is submitted and approved in accordance with the Zoning Ordinance.

b. An applicant may submit Construction Plans and a Final Plat simultaneously in lieu of a Preliminary Plat if an Improvement Agreement and appropriate surety (see Section 5.04) are submitted along with the application.

(2) Staff Review. Unless otherwise specified under the regulations for a specific type of plat:

a. The Director of Development Services shall be the responsible official for a plat, and shall be responsible for the initial review of a plat for conformance with this Subdivision Ordinance and any other applicable ordinances of the City.

b. The Director of Development Services, and/or other City staff at the direction of the Director of Development Services, shall review all applications for completeness (refer to Section 3.01) based on a checklist supplied by Development Services.

c. The Director of Development Services, and/or other City staff at the direction of the Director of Development Services, shall then review all applications that are deemed complete for conformance with this Subdivision Ordinance and with other applicable City regulations.

SECTION 4.02 PRELIMINARY PLATS

(a) Purpose. The purpose of a Preliminary Plat shall be to determine the general layout of the subdivision, the adequacy of public facilities needed to serve the intended development, and the overall compliance of the land division with applicable requirements of this Subdivision Ordinance.

(b) Exceptions.

(1) A Preliminary Plat is not required when a Minor Plat is submitted (refer to Section 4.05).

(2) A Final Plat in accordance with Section 4.03, along with Construction Plans in accordance with Section 5.01, may be submitted in lieu of a Preliminary Plat if an Improvement Agreement and appropriate surety (see Section 5.04) are submitted along with the application.

(c) Accompanying Applications.

(1) An application for a Preliminary Plat shall be accompanied by a Preliminary Drainage Plan, a Preliminary Utility Plan, and other plans if deemed necessary for thorough review by the

Director of Development Services or the Director of Engineering Services. However, approval of each shall be separate and in accordance with this Section 4.02 for Preliminary Plats and with Section 5.01 for Construction Plans.

(2) The applicant shall furnish with the application to the City a current title commitment issued by a title insurance company authorized to do business in Texas, a title opinion letter from an attorney licensed to practice in Texas, or some other acceptable proof of ownership, identifying all persons having an ownership interest in the property subject to the Preliminary Plat.

(d) **Review by Director of Development Services.** The Director of Development Services shall:

(1) Initiate review of the plat and materials submitted (including the required Preliminary Drainage Plan and Preliminary Utility Plan).

(2) Request written comments from other City departments, such as Engineering Services, Fire Department, Public Works, Parks and Recreation, if deemed necessary.

(3) Make available plats and reports to the Commission for review.

(4) Upon determination that the application is ready to be acted upon, schedule the Preliminary Plat for consideration on the agenda of the next available meeting of the Planning & Zoning Commission.

(e) **Action by Planning & Zoning Commission.** The Commission shall:

(1) Review the Preliminary Plat application, the findings of the Director of Development Services, and any other information available. From all such information, the Commission shall determine whether the Preliminary Plat conforms to the regulations of this Subdivision Ordinance.

(2) Act within thirty (30) calendar days following the official filing date of the Preliminary Plat application (unless the applicant submits a Waiver of Right to 30-Day Action as outlined in Section 3.03(e)). If no decision is rendered by the Commission within the thirty (30) day period described above or such longer period as may have been agreed upon, the Preliminary Plat, as submitted, shall be deemed to be approved.

(3) Take one of the following actions:

a. Approve the Preliminary Plat;

b. Approve the Preliminary Plat with conditions, which shall mean that the Preliminary Plat shall be considered to have been approved once such conditions are fulfilled; or

c. Deny the Preliminary Plat.

(f) **Criteria for Approval.** The following criteria shall be used by the Commission to determine whether the application for a Preliminary Plat shall be approved, approved with conditions, or denied:

(1) The Preliminary Plat is consistent with all zoning requirements for the property, including any applicable Planned Development zoning standards, and with any approved Improvement Agreement if applicable;

(2) The proposed provision and configuration of public improvements including, but not limited to, roads, water, wastewater, storm drainage, park facilities, open spaces, habitat restoration, easements and rights-of-way are adequate to serve the development, meet applicable standards of this Subdivision Ordinance, and conform to the City's adopted master plans for those facilities;

(3) The Preliminary Plat is in accordance with the City's interlocal agreements with Collin and Denton Counties if the proposed development is located in whole or in part in the ETJ of the City;

(4) The Preliminary Plat has been duly reviewed by applicable City staff;

(5) The Preliminary Plat conforms to design requirements and construction standards as set forth in the *Engineering Standards*; and

(6) The Preliminary Plat is consistent with the Comprehensive Plan, except where application of the Plan may conflict with State law (e.g., land use in the ETJ).

(7) The proposed development represented on the Preliminary Plat does not endanger public health, safety or welfare.

(g) Effect of Approval. The approval of a Preliminary Plat shall allow the applicant to proceed with the development and platting process by submitting Construction Plans (Section 5.01) and a Final Plat (Section 4.03). Approval of the Preliminary Plat shall be deemed general approval of the subdivision's layout only, and shall not constitute approval or acceptance of Construction Plans or a Final Plat.

(h) Appeal of the Decision on a Preliminary Plat Application.

(1) Initiation of an Appeal. The applicant or no less than four (4) voting members of City Council may appeal the decision of the Commission by submitting a written notice of appeal to the Director of Development Services within fourteen (14) calendar days following the date of the Commission's decision.

a. For a City Council-initiated appeal, the Council shall consider and act on whether it will appeal the Commission's decision at its first regular meeting (for which there is time to include such appeal on its posted agenda, as required by State law) that occurs after the Commission meeting at which the decision was made.

b. Written notice of the City Council's vote to appeal shall be submitted to the Director of Development Services within seven (7) calendar days following the City Council's vote to appeal the decision.

c. For an applicant-initiated appeal, a letter stating the reasons for the appeal, citing the specific applicable section(s) of the Subdivision Ordinance, shall be submitted by the applicant.

d. The Director of Development Services may, on his/her own initiative, appeal the decision of the Commission by scheduling an appeal on the City Council's next regular meeting (for which there is time to include such appeal on its posted agenda as required by State law) that occurs after the Commission meeting at which the decision was made.

(2) Council Decision. The City Council shall consider the appeal at a public meeting no later than thirty (30) calendar days after the date on which the notice of appeal is submitted to the Director of Development Services. The City Council may affirm, modify or reverse the decision of the Commission by simple majority vote. The decision of the City Council is final.

(i) Expiration.

(1) Two-Year Validity. The approval of a Preliminary Plat shall remain in effect for a period of two (2) years following the date of approval, during which period the applicant shall submit and receive approval for Construction Plans and a Final Plat for the land area shown on the Preliminary Plat. If Construction Plans and a Final Plat application have not been approved within the two (2)-year period, the Preliminary Plat shall expire.

(2) Phased Developments - Partial Construction Plans & Final Plat. If Construction Plans and a Final Plat for only a portion of the land area shown on the Preliminary Plat are approved by the end of the two (2)-year period, the Preliminary Plat for the remainder of the land not included on the Construction Plans or Final Plat shall expire on such date.

(3) Relationship to Construction Plans. A Preliminary Plat shall remain valid for the period of time in which approved Construction Plans are valid.

(4) Action on Final Plat. Should a Final Plat application be submitted within the two (2)-year period, but not be acted upon by the Commission within the two (2)-year period, the Preliminary Plat shall expire unless an extension is granted as provided in Section 4.02(j).

(5) Void If Not Extended. If the Preliminary Plat is not extended as provided in Section 4.02(j), it shall expire and shall become null and void.

(j) Extension. A Preliminary Plat may be extended for a period not to exceed one (1) year beyond the Preliminary Plat's expiration date. A request for extension shall be submitted to Development Services in writing at least thirty (30) calendar days prior to expiration of the Preliminary Plat, and shall include reasons why the Plat should be extended.

(1) Decision by the Director of Development Services.

a. The Director of Development Services will review the extension request and shall approve it, approve it with conditions, or deny the extension request within thirty (30) calendar days following the official filing date of the request.

b. Should the Director of Development Services fail to act on an extension request within thirty (30) calendar days, the extension shall be deemed to be approved.

(2) Considerations. In considering an extension, the Director of Development Services shall consider whether the following conditions exist:

a. A Final Plat has been submitted and/or approved for any portion of the property shown on the Preliminary Plat;

b. Construction Plans have been submitted and/or approved for any portion of the property shown on the Preliminary Plat;

c. Construction is occurring on the subject property;

d. The Preliminary Plat complies with new ordinances that impact the health, safety and general welfare of the community; and/or

e. If there is a need for a park, school or other public facility or improvement on the property.

(3) Conditions. In granting an extension, the decision-maker may impose such conditions as are needed to ensure that the land will be developed in a timely fashion and that the public interest is served. Any extension may be predicated upon compliance with new development regulations and/or the applicant waiving any vested rights.

(4) Appeal of Denial for Extension.

a. *Appeal of the Director's Decision.* The denial of an extension by the Director of Development Services may be appealed to the Commission. A written request for such appeal shall be received by Development Services within fourteen (14) calendar days following the denial. The Commission shall hear and consider such an appeal within thirty (30) calendar days following Development Services' receipt of the appeal request.

b. *Appeal of the Commission's Decision.* The denial of an extension by the Commission may be appealed to the City Council. A written request for such appeal shall be received by the Director of Development Services within fourteen (14) calendar days following the denial. The City Council shall hear and consider such an appeal within thirty (30) calendar days following Development Services' receipt of the appeal request. The decision of the City Council is final.

(k) Amendments to Preliminary Plat Following Approval.

(1) Minor Amendments. Minor amendments to the design of the subdivision subject to an approved Preliminary Plat may be incorporated in an application for approval of a Final Plat without the necessity of filing a new application for re-approval of a Preliminary Plat. Minor amendments may only include minor adjustments in street or alley alignments, lengths and paving details, and minor adjustments to lot lines that do not result in creation of additional lots or any non-conforming lots (such as to Zoning standards), provided that such amendments are consistent with applicable approved prior applications.

(2) Major Amendments. All other proposed changes to the design of the subdivision subject to an approved Preliminary Plat shall be deemed major amendments that require submittal and approval of a new application for approval of a Preliminary Plat (including new fees, new reviews, new official filing date, etc.) before approval of Construction Plans and/or a Final Plat.

(3) Determination. The Director of Development Services shall make a determination of whether proposed amendments are deemed to be minor or major, thereby requiring new submittal of a Preliminary Plat.

SECTION 4.03 FINAL PLATS

(a) Purpose. The purpose of a Final Plat is to ensure that the proposed subdivision and development of the land is consistent with all standards of this Subdivision Ordinance pertaining to the adequacy of public facilities, that public improvements to serve the subdivision or development have been installed and accepted by the City or that provision for such installation has been made, that all other requirements and conditions have been satisfied or provided for to allow the Final Plat to be recorded.

(b) Exceptions. A Final Plat is not required when a Minor Plat is submitted (refer to Section 4.05).

(c) Ownership.

(1) The applicant shall furnish with the application to the City a current title commitment issued by a title insurance company authorized to do business in Texas, a title opinion letter from an attorney licensed to practice in Texas, or some other acceptable proof of ownership, identifying all persons having an ownership interest in the property subject to the Final Plat.

(2) The Final Plat shall be signed by each owner, or by the representative of the owners authorized to sign legal documents for the owners, effectively denoting that they are consenting to the platting of the property and to the dedications and covenants that may be contained in the Final Plat. Such consent shall be subject to review and approval by the City Attorney, and the applicant shall reimburse the City for all related legal costs for review. This reimbursement shall be paid in full prior to filing of the Final Plat.

(d) Complete Applications for Final Plats in the Extraterritorial Jurisdiction (ETJ). Where the land to be platted lies within the ETJ of the City in a county with which the City has an interlocal agreement under Texas Local Government Code, Chapter 242, a complete application shall be submitted to the City.

(e) Accompanying Applications. An application for a Final Plat may be accompanied by Construction Plans if also accompanied by an Improvement Agreement and appropriate surety in accordance with Section 5.04. However, approval of each shall be separate and in accordance with this Section 4.03 for Final Plats and with Section 5.01 for Construction Plans.

(f) Prior Approved Preliminary Plat. The Final Plat and all accompanying data shall conform to the Preliminary Plat as approved by the Commission, or as the Preliminary Plat may have been amended subsequently (Section 4.02(k)), if applicable, incorporating all conditions imposed or required by the Commission, if applicable.

(g) Review by Director of Development Services. The Director of Development Services shall:

(1) Initiate review of the plat and materials submitted.

(2) Request written comments from other City departments, such as Engineering Services, Fire Department, Public Works and Parks & Recreation, if deemed necessary.

(3) Make available plats and reports to the Commission for review.

(4) Upon determination that the application is ready to be acted upon, schedule the Final Plat for consideration on the agenda of the next available meeting of the Commission.

(h) **Action by Planning & Zoning Commission.** The Commission shall:

(1) Review the Final Plat application, the findings of the Director of Development Services, and any other information available. From all such information, the Commission shall determine whether the Final Plat conforms with the regulations of this Subdivision Ordinance.

(2) Act within thirty (30) calendar days following the official filing date of Final Plat (unless the applicant submits a Waiver of Right to 30-Day Action as outlined in Section 3.03(e)). If no decision is rendered by the Commission within the thirty (30) day period described above or such longer period as may have been agreed upon, the Final Plat, as submitted, shall be deemed to be approved.

(3) Take one of the following actions:

a. Approve the Final Plat;

b. Approve the Final Plat with conditions, which shall mean that the Final Plat shall be considered to have been approved once such conditions are fulfilled; or

c. Deny the Final Plat.

(i) **Criteria for Approval.** The following criteria shall be used by the Commission to determine whether the application for a Final Plat shall be approved, approved with conditions, or denied:

(1) <u>Prior Approved Preliminary Plat.</u>

a. The Final Plat conforms to the approved Preliminary Plat except for minor amendments that are authorized under Section 4.02(k) and that may be approved without the necessity of revising the approved Preliminary Plat;

b. All conditions imposed at the time of approval of the Preliminary Plat, as applicable, have been satisfied;

c. The Construction Plans conform to the requirements of Section 5.01 and have been approved by the Director of Engineering Services;

d. Where public improvements have been installed, the improvements conform to the approved Construction Plans and have been approved for acceptance by the Director of Engineering Services;

e. Where the Director of Engineering Services has authorized public improvements to be deferred, an Improvement Agreement has been executed and submitted by the property owner in conformity with Section 5;

f. The final layout of the subdivision or development meets all standards for adequacy of public facilities contained in this Ordinance;

g. The Final Plat meets all applicable County standards to be applied under an interlocal agreement between the City and the County under Texas Local Government Code, Chapter 242, where the proposed development is located in whole or in part in the ETJ of the City and in the applicable County;

h. The plat conforms to design requirements and construction standards as set forth in the *Engineering Standards*; and

i. The plat conforms to the Development Services' subdivision application checklists.

(2) No Prior Approved Preliminary Plat.

a. The Final Plat conforms to all criteria for approval of a Preliminary Plat;

b. The Construction Plans conform to the requirements of Section 5.01 and have been approved by the Director of Engineering Services;

c. An Improvement Agreement or surety for installation of public improvements have been prepared and executed by the property owner in conformance with Section 5;

d. The final layout of the subdivision or development meets all standards for adequacy of public facilities contained in this Ordinance;

e. The Final Plat meets all applicable County standards to be applied under an interlocal agreement between the City and the County under Texas Local Government Code, Chapter 242, where the proposed development is located in whole or in part in the ETJ of the City and in the applicable County; and

f. The Final Plat conforms to the Development Services' application checklist.

(j) Procedures for Recordation Upon Approval. The applicant shall supply to Development Services the required number of signed and executed copies of the Final Plat that will be needed to file the Plat, upon approval, at the applicable County (in the County's required format) at least seven (7) calendar days prior to the Planning & Zoning Commission meeting at which it will be considered for approval.

(1) General.

a. *Signatures.* After approval of the Final Plat, the Director of Development Services shall procure the appropriate City signatures on the Final Plat.

b. *Recording Upon Performance.* The Final Plat shall be recorded after:

1. The Final Plat is approved by the City;

2. All required public improvements have been completed and accepted by the City (or an Improvement Agreement has been executed and appropriate surety provided in accordance with Section 5.04);

3. All County filing requirements are met.

(2) Submittal of Final Plat Where Improvements Installed. Where all required public improvements have been installed prior to recording of the Final Plat, the applicant shall meet all requirements in accordance with Section 5.

(3) Submittal of Final Plat Where Improvements Have Not Been Installed. Where some of or all required public improvements are not yet completed in connection with an approved Final Plat, the applicant shall submit the Final Plat as approved by the Commission, revised to reflect any conditions imposed by the Commission as part of approval.

(4) Update of Proof of Ownership. If there has been any change in ownership since the time of the Proof of Ownership provided under Section 4.03(c), the applicant shall submit a new consent agreement executed by each owner consenting to the platting of the property and the dedications and covenants contained in the plat. The title commitment or title opinion

letter and consent agreement shall be subject to review and approval by the City Attorney, and the applicant shall reimburse the City for all related legal costs for review. This reimbursement shall be paid in full prior to filing of the Final Plat.

(k) **Effect of Approval.** The approval of a Final Plat:

(1) Supersedes any prior approved Preliminary Plat for the same land.

(2) Authorizes the applicant to install any improvements in public rights-of-way in conformance with approved Construction Plans and under an Improvement Agreement (refer to Section 5), if applicable,

(3) Authorizes the applicant to seek Construction Release (refer to Section 5.01(i)) and/or issuance of a Building Permit.

(l) **Appeal of Decision of Final Plat Application.** Appeal of a decision on a Final Plat application shall be as outlined in Section 4.02(h).

(m) **Revisions Following Recording/Recordation.** Revisions may only be processed and approved as a Replat or Amending Plat, as applicable.

SECTION 4.04 CONVEYANCE PLATS

(a) **Purpose.** The purpose of a Conveyance Plat is to subdivide land and to provide for recordation of same, for the purpose of conveying (i.e., selling) the property without developing it. A Conveyance Plat may be used to convey the property or interests therein; however, a Conveyance Plat does not constitute approval for any type of development on the property. A Conveyance Plat is an interim step in the subdivision and development of land.

(b) **Applicability.** A Conveyance Plat may be used in lieu of a Final Plat to record the subdivision of property in the following instances:

(1) To record the remainder of a tract that is larger than five (5) acres, and that is created by the final platting of a portion of the property, provided that the remainder is not intended for immediate development.

(2) To record the subdivision of property into parcels, five (5) acres or smaller in size, that are not intended for immediate development, provided all required public improvements exist to the City's current standards prior to approval and minimum frontage requirements are met. All public rights-of-way must be dedicated and all abutting streets and utilities must be installed and accepted by the City. Installation of on-site improvements may be delayed if development of other tracts is not affected.

(c) **Review and Consideration.** Unless otherwise specified within this Section 4.04 for specific requirements for a Conveyance Plat, a Conveyance Plat shall be processed and approved using the same timing and procedures, including recordation, as specified for a Final Plat; refer to Section 4.03. Procedures to appeal a decision on a Conveyance Plat shall also be processed and considered the same as a Final Plat (Section 4.03).

(d) **Subsequent Filing of a Final Plat.** No Final Plat processed and approved in association with a Conveyance Plat shall be filed without the concurrent or prior filing of the associated approved Conveyance Plat for the remainder of the subject property.

(e) **Conveyance Plat Requirements.**

(1) No building or development permits shall be issued nor permanent utility service provided for land that has only received approval as a Conveyance Plat; a Final Plat must be filed for building and development permits and for utility service. Notwithstanding the above, the Chief Building Official may authorize temporary building permits, temporary occupancy permits, and temporary utility service.

(2) A Conveyance Plat may be superseded by a revised Conveyance Plat or a Final Plat in total or in part through compliance with the procedures and requirements of this Ordinance.

(f) **Standards for Approval.**

(1) Access – All lots created by a Conveyance Plat shall have frontage and access to an existing or proposed public street, defined on the Major Thoroughfare Plan, or an existing standard street meeting City construction standards and accessing the existing City street system. All lots created by a Conveyance Plat shall provide points of access as required by the Zoning Ordinance and/or by this Ordinance.

(2) Dedication of Rights-of-Way – Dedication of rights-of-way shall be required in accordance with the *Engineering Standards*.

(g) **Effect of Approval.** The approval of a Conveyance Plat authorizes conveyance of the lot(s) created thereon, but does not authorize any type of development on the property. The applicant and future owner(s) of the property remain obligated to comply with all provisions in this Ordinance upon future development of the property including, but not limited to, all requirements for platting, required public improvements, utility extensions, street improvements or assessments, right-of-way and easement dedications, and all other requirements in this Ordinance.

SECTION 4.05 MINOR PLATS

(a) **Purpose.** The purpose of a Minor Plat is to simplify divisions of land under certain circumstances outlined in State law.

(b) **Applicability.** An application for approval of a Minor Plat may be filed only in accordance with State law, when all of the following circumstances apply:

(1) The proposed division results in four (4) or fewer lots;

(2) All lots in the proposed subdivision front onto an existing public street and the construction or extension of a street or alley is not required to meet the requirements of this Subdivision Ordinance; and

(3) Except for right-of-way widening and easements, the plat does not require the extension of any municipal facilities to serve any lot within the subdivision.

(c) **Application Requirements.** The requirements for the submittal of a Minor Plat shall be the same as the requirements for a Final Plat, as outlined in Section 4.03.

(d) **Review by Director of Development Services.** The Director of Development Services shall:

(1) Initiate review of the plat and materials submitted.

(2) Request written comments from other City departments, such as Engineering Services, Fire Department, Public Works and Parks & Recreation, if deemed necessary.

(e) **Action by Director of Development Services.** The Director of Development Services shall:

(1) Determine whether the Minor Plat meets the regulations of this Subdivision Ordinance.

(2) Act within thirty (30) calendar days following the official filing date of a completed application for a Minor Plat (unless the applicant submits a Waiver of Right to 30-Day Action as outlined in Section 3.03(e)). If no decision is rendered by the Director of Development Services, or if the Director has not deferred the application to the Planning & Zoning Commission for decision, within the thirty (30) day period described above or such longer period as may have been agreed upon, the Minor Plat, as submitted, shall be deemed to be approved.

(3) Take one of the following actions:

a. Approve the Minor Plat;

b. Approve the Minor Plat with conditions, which shall mean that the Minor Plat shall be considered to have been approved once such conditions are fulfilled; or

c. Defer the Minor Plat to the Commission for consideration prior to expiration of the required 30-day approval period unless a Waiver of Right to 30-Day Action is submitted in accordance with Section 3.03(e).

(f) **Criteria for Approval.** The following criteria shall be used by the Director of Development Services to determine whether the application for a Minor Plat shall be approved, approved with conditions, or denied:

(1) The Minor Plat is consistent with all zoning requirements for the property (if applicable), any approved Improvement Agreement (if applicable), and all other requirements of this Subdivision Ordinance that apply to the plat;

(2) All lots to be created by the plat already are adequately served by improved public street access and by all required City utilities and services and by alleys, if applicable;

(3) The ownership, maintenance and allowed uses of all designated easements have been stated on the Minor Plat; and

(4) Except for right-of-way widening and easements, the plat does not require the extension of any municipal facilities to serve any lot within the subdivision.

(g) **Procedures for Recordation Following Approval.** The procedures for recordation of a Minor Plat shall be the same as the procedures for recordation of a Final Plat, as outlined in Section 4.03.

(h) Appeal of Decision on Minor Plat Application.

(1) Commission Decision. If the Director of Development Services defers the Minor Plat application to the Planning & Zoning Commission, the Commission shall consider the application at a regular meeting no later than thirty (30) calendar days after the date on which the Director of Development Services deferred the application to the Commission. The Commission shall, upon simple majority vote, take one of the following actions:

a. Approve the Minor Plat;

b. Approve the Minor Plat with conditions, which shall mean that the Minor Plat shall be considered to have been approved once such conditions are fulfilled; or

c. Deny the Minor Plat.

(2) Appeal. The decision of the Commission may be appealed to the City Council in accordance with the procedures for an appeal on a Final Plat decision, which are outlined in Section 4.03. The City Council decision is final.

(i) Revisions Following Approval. Revisions may only be processed and approved as a Replat or Amending Plat, as applicable.

SECTION 4.06 REPLATS AND AMENDING PLATS – GENERAL REQUIREMENTS

(a) Applicability and Terminology.

(1) The procedures outlined in this Section and in subsequent Sections 4.07, 4.08 and 4.09 shall apply only if a property owner seeks to change any portion of a plat that has been filed of record with the appropriate County.

(2) The term "Replat" includes changes to a recorded final plat, whether the change is effected by replatting without vacation (Section 4.07), replatting by vacating the recorded plat and approving a new application (Section 4.09), or approving an Amending Plat (Section 4.08).

(b) City Action Required. Unless otherwise specified, any change to a recorded plat shall be subject to approval by the Commission.

(c) Construction Management. If the subdivision as replatted requires construction of additional improvements, the provisions of Section 5 shall apply. If the subdivision as replatted does not require any appreciable alteration or improvement of utility installations, streets, alleys, building setback lines, etc., then no Construction Plans shall be required.

(d) Application and Approval Procedures. Unless otherwise specified, application and all related procedures and approvals, including recordation, for a Replat or Amending Plat shall be the same as specified for a Final Plat, as outlined in Section 4.03.

SECTION 4.07 REPLATS

(a) **Purpose & Applicability.** A Replat of all or a portion of a recorded plat may be approved in accordance with State law without vacation of the recorded plat, if the Replat:

(1) Is signed and acknowledged by only the owners of the property being replatted;

(2) Is approved after a public hearing; and

(3) Does not propose to amend or remove any covenants or restrictions previously incorporated in the recorded plat.

(b) **General Notice and Hearing Requirements.** Published notice of the public hearing on the Replat application shall be given in accordance with Section 3.05 and State law, if applicable (also see specific notice and hearing requirements for special replats in Section 4.07(d)(3)). The public hearing shall be conducted by the Commission.

(c) **Partial Replat Application.** If a Replat is submitted for only a portion of a previously platted subdivision, the Replat must reference the previous subdivision name and recording information, and must state on the Replat the specific lots which are being changed along with a detailed "Purpose for Replat" statement.

(d) **Special Replat Requirements.**

(1) Applicability. A Replat without vacation of the preceding plat, in accordance with State law, must conform to the requirements of this Section 4.07(d) if:

a. During the preceding five (5) years, any of the area to be replatted was limited by an interim or permanent zoning classification to residential use for not more than two (2) residential units per lot; or

b. Any lot in the preceding plat was limited by deed restrictions to residential use for not more than two (2) residential units per lot.

(2) Exception. The requirements of this Section 4.07(d) shall not apply to any approval of a Replat application for a portion of a recorded plat if all of the proposed area sought to be replatted was designated or reserved for usage other than for single- or duplex-family residential usage. Such designation must be noted on the recorded plat or in the legally recorded restriction applicable to such plat.

(3) Notice and Hearing. Notice of the required public hearing shall be given before the fifteenth (15th) calendar day before the date of the hearing by:

a. Publication in an official newspaper or a newspaper of general circulation in the applicable City or unincorporated area (as applicable) in which the proposed replat property is located; and

b. By written notice, with a copy of Section 212.015(c) of the Texas Local Government Code (as amended) attached, forwarded by the City to the owners of lots that are in the original subdivision and that are within two hundred feet (200') of the lots to be replatted, as indicated on the most recently approved municipal tax roll or in the

case of a subdivision within the ETJ, the most recently approved applicable county tax roll of the property upon which the replat is requested. The written notice may be delivered by depositing the notice, properly addressed with postage prepaid, in a post office or postal depository within the boundaries of the City.

(4) Protest. If the Replat application is accompanied by a Waiver petition (per Section 9.01) and is protested in accordance with this Section 4.07(d)(4), approval of the Replat shall require the affirmative vote of at least three-fourths of the voting members of the Commission present at the meeting. For a legal protest, written instruments signed by the owners of at least twenty percent (20%) of the area of the lots or land immediately adjoining the area covered by the Replat application and extending two hundred feet (200') from that area, but within the original subdivision, must be filed with the Commission prior to the close of the public hearing. The area of streets and alleys shall be included in the area computations.

(e) **Review and Consideration.** The review and approval processes for a Replat shall be the same as the review and approval processes for a Final Plat (except for the public hearing and notice requirements described in Section 4.07(d)(3)), which are outlined in Section 4.03. The Director of Development Services shall be the responsible official and the Commission shall be the initial decision-maker for a Replat application. Procedures to appeal a decision on a Replat shall also be processed and considered the same as a Final Plat (Section 4.03).

(f) **Effect.** Upon approval and recording of the Replat, it is controlling over the previously recorded plat for the portion replatted.

SECTION 4.08 AMENDING PLATS

(a) **Purpose.** The purpose of an Amending Plat shall be to provide an expeditious means of making minor revisions to a recorded plat consistent with provisions of State law.

(b) **Applicability.** The procedures for an Amending Plat shall apply only if the sole purpose of the Amending Plat is to achieve one or more of the following:

(1) Correct an error in a course or distance shown on the preceding plat;

(2) Add a course or distance that was omitted on the preceding plat;

(3) Correct an error in a real property description shown on the preceding plat;

(4) Indicate monuments set after the death, disability or retirement from practice of the engineer or surveyor responsible for setting monuments;

(5) Show the location or character of a monument that has been changed in location or character or that is shown incorrectly as to location or character on the preceding plat;

(6) Correct any other type of scrivener or clerical error or omission previously approved by the municipal authority responsible for approving plats, including lot numbers, acreage, street names, and identification of adjacent recorded plats;

(7) Correct an error in courses and distances of lot lines between two adjacent lots if:

a. Both lot owners join in the application for amending the plat;
b. Neither lot is abolished;
c. The amendment does not attempt to remove recorded covenants or restrictions; and
d. The amendment does not have a material adverse effect on the property rights of the other owners in the plat;

(8) Relocate a lot line to eliminate an inadvertent encroachment of a building or other improvement on a lot line or easement;

(9) Relocate one or more lot lines between one or more adjacent lots if:
a. The owners of all those lots join in the application for amending the plat;
b. The amendment does not attempt to remove recorded covenants or restrictions; and
c. The amendment does not increase the number of lots;

(10) Make necessary changes to the preceding plat to create six (6) or fewer lots in the subdivision or a part of the subdivision covered by the preceding plat if:
a. The changes do not affect applicable zoning and other regulations of the municipality;
b. The changes do not attempt to amend or remove any covenants or restrictions; and
c. The area covered by the changes is located in an area that the municipal planning commission or other appropriate governing body of the municipality has approved, after a public hearing, as a residential improvement area; or

(11) Replat one or more lots fronting on an existing street if:
a. The owners of all those lots join in the application for amending the plat;
b. The amendment does not attempt to remove recorded covenants or restrictions;
c. The amendment does not increase the number of lots; and
d. The amendment does not create or require the creation of a new street or make necessary the extension of municipal facilities.

(c) **Certificates of Correction.** Certificates of Correction are prohibited.

(d) **Notice.** In accordance with State law, the approval and issuance of an Amending Plat shall not require notice, hearing or approval of other lot owners.

(e) **Review by Director of Development Services.** The Director of Development Services shall:

(1) Initiate review of the plat and materials submitted.

(2) Request written comments from other City departments, such as Engineering Services, Fire Department, Public Works and Parks & Recreation, if deemed necessary.

(f) **Action by Director of Development Services.** The Director of Development Services shall:

(1) Determine whether the Amending Plat meets the regulations of this Subdivision Ordinance.

(2) Act within thirty (30) calendar days after the application is deemed complete per Section 3.03(g)

(3) Take one of the following actions:

a. Approve the Amending Plat;

b. Approve the Amending Plat with conditions, which shall mean that the Amending Plat shall be considered to have been approved once such conditions are fulfilled; or

c. Defer the Amending Plat to the Commission for consideration prior to expiration of the required 30-day approval period unless a Waiver of Right to 30-Day Action is submitted in accordance with Section 3.03(e).

(g) **Procedures for Recordation Following Approval.** The procedures for recordation of an Amending Plat shall be the same as the procedures for recordation of a Final Plat, as outlined in Section 4.03.

(h) **Effect.** Upon approval, an Amending Plat shall be recorded and is controlling over the previously recorded plat without vacation of that plat.

(i) **Appeal of Decision on Amending Plat Application.**

(1) Commission Decision. If the Director of Development Services defers the Amending Plat application to the Planning & Zoning Commission, the Commission shall consider the application at a regular meeting no later than thirty (30) calendar days after the date on which the Director of Development Services deferred the application to the Commission. The Commission shall, upon simple majority vote, take one of the following actions:

a. Approve the Amending Plat;

b. Approve the Amending Plat with conditions, which shall mean that the Amending Plat shall be considered to have been approved once such conditions are fulfilled; or

c. Deny the Amending Plat.

(2) Appeal. The decision of the Commission may be appealed to the City Council in accordance with the procedures for an appeal on a Final Plat decision, which are outlined in Section 4.03. The City Council decision is final.

SECTION 4.09 PLAT VACATION

(a) **Purpose.** The purpose of a Plat Vacation is to provide an expeditious means of vacating a recorded plat in its entirety, consistent with provisions of State law.

(b) **Initiation of a Plat Vacation.**

(1) By Property Owner. The property owner of the tract covered by a plat may submit an application to vacate the plat at any time before any lot in the plat is sold.

(2) By All Lot Owners. If lots in the plat have been sold, an application to vacate the plat must be submitted by all the owners of lots in the plat.

(3) City Council. If the City Council, on its own motion, determines that the plat should be vacated in the interest of and to protect the public's health, safety and welfare; and:

a. No lots within the approved plat have been sold within five (5) years following the date that the Final Plat was approved by the City; or

b. The property owner has breached an Improvement Agreement, and the City is unable to obtain funds with which to complete construction of public improvements, except that the vacation shall apply only to lots owned by the property owner or its successor; or

c. The plat has been of record for more than five (5) years, and the City Council determines that the further sale of lots within the subdivision or addition presents a threat to public health, safety and welfare, except that the vacation shall apply only to lots owned by the property owner or its successors.

(c) **Notice.** Published notice of the public hearing on the Plat Vacation application shall be given in accordance with Section 3.05 and State law. The hearing shall be conducted by the City Council.

(d) **Review by Director of Development Services.** The Director of Development Services shall:

(1) Initiate review of the Plat Vacation application and materials submitted.

(2) Request written comments from other City departments, such as Engineering Services, Fire Department, Public Works and Parks & Recreation, if deemed necessary.

(e) **Action by the City Council.** The City Council shall:

(1) Review the Plat Vacation application, the findings of the Director of Development Services, and any other information available. From all such information, the City Council shall make a finding as to whether or not the plat should be vacated. The City Council's decision on a Plat Vacation shall be final.

(2) Take one of the following actions:

a. Approve the Plat Vacation;

b. Approve the Plat Vacation with conditions, which shall mean that the Plat Vacation shall be considered to have been approved once such conditions are fulfilled; or

c. Deny the Plat Vacation.

(f) Procedures for Recordation Following Approval. If the City Council adopts a resolution vacating a plat in whole, it shall record a copy of the resolution in the County Clerk's Office. If the City Council adopts a resolution vacating a plat in part, it shall cause a revised Final Plat to be recorded along with the resolution which shows that portion of the original plat that has been vacated and that portion that has not been vacated.

(g) Effect.

(1) On the execution and recording of the vacating instrument, the previously filed plat shall have no effect. Regardless of the City Council's action on the petition, the property owner(s) or developer will have no right to a refund of any monies, fees or charges paid to the City nor to the return of any property or consideration dedicated or delivered to the City except as may have previously been agreed to by the City Council.

(2) The plat is vacated when a signed, acknowledged instrument declaring the plat vacated is approved and recorded in the manner prescribed for the original plat.

(3) The City Council, at its discretion, shall have the right to retain all or specific portions of road rights-of-way or easements shown on the plat being considered for vacation. However, the City Council shall consider plat vacation upon satisfactory conveyance of easements and/or rights-of-way in a separate legal document using forms provided by the City Attorney's office.

(This page intentionally left blank.)

SECTION 5: CONSTRUCTION PLANS & PROCEDURES

SECTION 5.01 CONSTRUCTION PLANS

(a) **Purpose.** To require that required public improvements be installed to serve a development in accordance with all the Subdivision Ordinance standards.

(b) **Submitting Plans.** Plans shall be submitted in accordance with Engineering Services requirements, as provided in the Development Application Handbook. Incomplete plans shall not be accepted and such plans shall be returned to the applicant.

(c) **Responsible Official and Decision.** The Director of Engineering Services shall be the responsible official for review and approval of Construction Plans. The Director of Engineering Services shall also be the initial decision-maker for Construction Plans. In this capacity, therefore, the Director of Engineering Services shall approve, approve subject to modifications, or deny the Construction Plans.

(d) **Approval Required & Timing of Construction.** Construction Plans must be approved in accordance with this Section prior to the approval and/or recordation of the Final Plat, unless otherwise stated within the Subdivision Ordinance.

(e) **Criteria for Approval.** The Director of Engineering Services shall approve Construction Plans if:

(1) The plans are consistent with the approved Preliminary Plat, or the proposed Final Plat; and

(2) The plans conform to the subject property's zoning and Planned Development standards (including zoning design standards), and to the standards for adequate public facilities, contained in this Subdivision Ordinance and all other applicable municipal codes.

(f) **Effect.** Approval of Construction Plans authorizes the applicant to schedule a Pre-Construction Meeting in accordance with Section 5.02 and apply for Construction Release in accordance with Section 5.01(i).

(g) **Expiration.** The approval of Construction Plans shall remain in effect for a period of one (1) year from the date of approval, or for the duration of construction of the project, provided that progress toward completion of the project continues to be demonstrated, unless the Plans are extended in accordance with Section 5.01(h).

(h) Extension. Construction Plans may be extended for a period of six (6) additional months beyond the expiration date. A request must be made in writing to Engineering Services for such extension prior to expiration of the plans, and shall include reasons why the plans should be extended.

(1) Decision by the Director of Engineering Services.

a. The Director of Engineering Services will review the extension request, and shall approve, approve with conditions, or deny the extension request within thirty (30) calendar days following the official filing date.

b. Should the Director of Engineering Services fail to act on an extension request within thirty (30) calendar days, the extension shall be deemed to be approved.

(2) Consideration. The Director of Engineering Services shall extend Construction Plans approval for a period of six (6) additional months beyond the Plans' expiration date if:

a. A Final Plat has been submitted, approved or filed of record for any portion of the property shown on the Construction Plans;

b. The Construction Plans comply with new ordinances that impact the health, safety and general welfare of the community;

c. Demonstrable forward progress has been made to proceed with construction or required improvements; and

d. An Improvement Agreement (Section 5.04), if applicable, is still valid and in full effect.

(3) Conditions. In granting an extension, the Director of Engineering Services may impose such conditions as are needed to ensure that the land will be developed in a timely fashion and that the public interest is served. Any extension may be predicated upon compliance with new development regulations and/or the applicant waiving any vested rights.

(4) Total Extension. A second, six (6) month extension may be requested using the same process outlined above.

(i) Construction Release. Upon approval of the Preliminary Plat and the Construction Plans, receipt of all documentation (e.g., insurance information, bonds, etc.) and fees required by Engineering Services, and after the Pre-Construction Meeting with City staff (Section 5.02), the Director of Engineering Services shall release the plans for construction if all City requirements pertaining to construction have been met. The Construction Release shall remain in effect for a period of one (1) year from the date of issuance, or for the duration of construction of the project, provided that progress toward completion of the project continues to be demonstrated. Expiration, and possible extension, of the Construction Release shall be the same as for the Construction Plans (see Sections 5.01(g) and 5.01(h)).

SECTION 5.02 PRE-CONSTRUCTION MEETING

(a) **Requirement.** The applicant(s) shall attend a Pre-Construction Meeting with Engineering Services following the approval of Construction Plans and prior to commencement of any construction on the property.

(b) **Purpose.** The purpose of the Pre-Construction Meeting is to discuss administrative, communication, and operating procedures for project construction prior to Construction Release (refer to Section 5.01(i)) or issuance of a Building Permit. A list of typical inspection items, procedures and acceptance criteria for items in public right-of-way and easements will also be furnished to the applicant.

(c) **Notice.** The applicant shall receive written notice from the Director of Engineering Services that Construction Plans have been approved and that the project is eligible for a Pre-Construction Meeting.

(d) **Effect.** Following the Pre-Construction Meeting and upon approval of the Construction Plans and full compliance with all pre-construction requirements, the Director of Engineering Services shall authorize Construction Release (see Section 5.01(i)), allowing the applicant to commence with construction of the project. The applicant may also be issued a Building Permit, if appropriate, provided that a Building Permit application has been submitted and approved and all other Building Permit requirements have also been met.

SECTION 5.03 TIMING OF PUBLIC IMPROVEMENTS

(a) **Completion Prior to Final Plat Approval & Recordation.** Completion of all required public improvements, in accordance with the approved Preliminary Plat and the approved Construction Plans, shall occur prior to Final Plat approval and recordation. A Final Plat shall not be accepted for filing, nor shall it be considered for approval, prior to completion of such improvements except as provided in Section 5.03(b).

(b) **Completion After Final Plat Approval & Recordation.** The Director of Engineering Services, upon written request by the applicant, may allow construction of public improvements after Final Plat approval and recordation. Such postponement shall be conditioned on execution of an Improvement Agreement and provision of security, in accordance with Section 5.04. It shall be at the Director's discretion to determine whether postponing construction of public improvements until after Final Plat approval and recordation is appropriate, and therefore, whether financial guarantee is acceptable through an Improvement Agreement.

(c) **Deferral of Obligation.** The Director of Engineering Services may defer the developer's obligation to dedicate rights-of-way for, or to construct, public improvements to serve a new development upon execution of an Improvement Agreement and upon provision of adequate security (see Section 5.04).

(d) Phased Development. If the development is being platted and constructed in phases, improvements shall be completed as platted areas are approved and phases are constructed. Also refer to Section 4.02(i) for details regarding phased development and Preliminary Plat validity.

(e) Easements for Utility Providers. The applicant is responsible for contacting all utility providers prior to beginning construction, and for securing all necessary easements for same prior to Final Plat approval and recordation. The applicant's engineer shall provide the Director of Engineering Services with written certification that all necessary easements are secured for the various utility providers, and such easements shall be shown on the Final Plat with the recording information for each.

(f) Off-Site Easements. All necessary off-site easements required for installation of required off-site public improvements to serve the development shall be acquired by the applicant prior to the Pre-Construction Meeting (see Section 5.02), or prior to approval and recordation of the Final Plat, whichever occurs first. Off-site easements shall be conveyed and recorded at the County by an instrument approved by the City. If the property on which the off-site easement is required has been platted, a replat is required to dedicate the easement.

SECTION 5.04 IMPROVEMENT AGREEMENTS AND SECURITY FOR COMPLETION

(a) Improvement Agreement and Security for Completion. When any of the required public improvements will be postponed and constructed after Final Plat approval and recordation, the Final Plat shall not be accepted for filing, nor shall it be approved, unless and until the applicant enters into an Improvement Agreement by which the applicant:

(1) Will complete the improvements;

(2) Warrants the improvements for a period of two (2) years following final acceptance by the City;

(3) Provide a maintenance bond in the amount of one hundred and ten percent (110%) of the costs of the improvements for such period;

(4) Provides provisions for securing the obligations of the agreement consistent with Section 5.04(e); and

(5) Outlines other terms and conditions as are agreed to by the applicant and the City, or as may be required by this Subdivision Ordinance.

(b) Agreement to Run with the Land. The Improvement Agreement shall provide that the covenants and other items of agreement contained therein shall run with the land and shall bind all successors, heirs and assignees of the applicant. All existing owners shall be required to execute the agreement or provide written consent to the covenants and other items contained in the agreement.

(c) Decision by the Director of Engineering Services. The Director of Engineering Services shall review the Improvement Agreement, and shall approve it, approve it with conditions, or deny it. The agreement shall also be subject to review by the City Attorney prior to any approval by the Director

of Engineering Services, and the applicant shall reimburse the City for all related legal costs for review. This reimbursement shall be paid in full prior to filing of the Final Plat.

(d) Appeal of Decision. The applicant may appeal the Director of Engineering Services' decision on the Improvement Agreement to the City Council by submitting written notice of appeal to the Director of Engineering Services within fourteen (14) calendar days following the date of such decision. The City Council shall hear and decide the appeal within thirty (30) calendar days following receipt of the notice of appeal. The City Council may only overturn the Director of Engineering Services' decision upon a favorable vote of at least four (4) of the Council's voting members, and the Council's decision shall be final.

(e) Security for Completion of Improvements.

(1) Type of Security. When any of the required public improvements will be constructed after approval and recordation of the Final Plat, the applicant shall guarantee proper construction of such postponed improvements, in accordance with the City's design standards and with this Subdivision Ordinance, by a bond executed by a surety company holding a license to do business in the State of Texas, and acceptable to the City, on the form provided by the City. The performance bond shall be approved as to form by the City Attorney;

(2) Estimated Cost & Security Approval. Security shall be issued in the amount of one hundred and ten percent (110%) of the cost to construct and complete all required public improvements to the City's standards as estimated by the applicant's professional engineer, and as approved by the Director of Engineering Services. Security shall be subject to the review and approval of the City Attorney. The applicant shall reimburse the City for all related legal costs for review (this reimbursement shall be paid in full prior to filing of the Final Plat).

(3) Security for Construction in Extraterritorial Jurisdiction (ETJ). Where all or some portion of the proposed development is located in the City's ETJ, the security shall be in a form and shall contain such terms as are consistent with the City's interlocal agreements with Collin and Denton Counties (as applicable) under Texas Local Government Code, Chapter 242. In cases where the requirements governing the form and terms of the security are defined in such an agreement, they will supersede any conflicting provisions within this Subdivision Ordinance.

(f) Escrow Policies and Procedures.

(1) Request for Escrow. The City may require or the developer may petition the City to defer required improvements in exchange for a deposit of escrow. An example may include a timing issue due to pending street improvements by another agency such as TxDOT. The Director of Engineering Services may require studies and other information to support the developer's request to escrow.

(2) Escrow Deposit With the City. When the Director of Engineering Services requires or agrees to accept escrow deposits, the developer shall deposit in escrow with the City an amount equal to one hundred and ten percent (110%) of the total "turnkey" costs including, but not limited to, the design, permitting, acceptance and inflation costs related to the

improvement(s). The Director of Engineering Services shall review and approve the amount, which shall be approved and paid prior to recordation of the Final Plat.

(3) City Usage of Escrowed Funds. The City may also use the escrowed funds in participation with another entity (such as TxDOT, Collin or Denton County, etc.) to jointly construct the public improvement(s).

(4) Termination of Escrow. Escrows, or portions of escrowed amounts, which remain unused after a period of ten (10) years following the date of such payment shall, upon written request, be returned to the developer. Such return of escrowed funds does not remove any obligations of the developer for construction of the required improvement(s).

(5) Refund. If all or a portion of a street or other type of public improvement for which escrow is deposited is constructed by a party other than the City, the remaining unused escrowed funds, upon written request, be refunded to the developer after completion and City acceptance of the street or public improvement.

(6) Interest on Escrowed Funds. When escrowed funds are returned or refunded to the escrowing developer, the City shall retain all of the interest accrued by the funds.

(7) Escrow Fee Agreement. The Director of Engineering Services, at his/her discretion, may require an escrow fee agreement be executed.

SECTION 5.05 INSPECTION, MAINTENANCE & ACCEPTANCE OF PUBLIC IMPROVEMENTS

(a) Inspections.

(1) The Director of Engineering Services shall inspect the construction of improvements while in progress, as well as upon completion. The applicant, or his contractor, shall maintain contact with the Director of Engineering Services during construction of improvements.

(2) Construction shall be in accordance with the approved Construction Plans. Any significant change in design required during construction shall be made by the applicant's engineer, and shall be subject to approval by the Director of Engineering Services.

(3) If the Director of Engineering Services finds, upon inspection, that any of the required public improvements have not been constructed properly and in accordance with the approved Construction Plans, the applicant shall be responsible for completing and/or correcting the public improvements to bring such into compliance.

(b) Maintenance During Construction. The applicant shall maintain all required public improvements during construction of the development.

(c) Submission of Record Drawings. The City shall accept required public improvements when the applicant's engineer has certified to the Director of Engineering Services, through submission of detailed “record” drawings of the project and filed copies of any off-site easements, unless otherwise noted within the Subdivision Ordinance, that the public improvements have been built in accordance with the approved Construction Plans. The City shall not accept improvements until the Final Plat is approved by the City and recorded at the County. Each record drawing sheet shall show all changes made in the plans during construction, and on each sheet, there shall be a

"record" stamp bearing the signature of the engineer and date. Detailed requirements for such drawings are available in Engineering Services.

(d) Acceptance or Rejection of Improvements by Director of Engineering Services.

(1) Responsible Official. The Director of Engineering Services shall be responsible for inspecting all required public improvements shown in the Construction Plans, and for accepting completed subdivision improvements intended for dedication to the City.

(2) Final Inspection. After completion of all improvements, franchise utilities, grading, and erosion control, the Director of Engineering Services, the Director of Public Works, the Director of Parks & Recreation, and other designated representatives (as applicable) will perform a final inspection before recommending acceptance of the improvements.

(3) Letter of Final Acceptance. If all improvements are completed, inspected, tested (if applicable), and determined by the City to be in conformance with this Subdivision Ordinance and with the City's design standards, then the Director of Engineering Services shall issue a Letter of Final Acceptance to the applicant, thereby notifying the applicant of the City's acceptance.

(4) Meaning of Acceptance. Acceptance of the improvements shall mean that the applicant has transferred all rights to all the public improvements to the City for title, use and maintenance.

(5) Rejection. The Director of Engineering Services shall reject those improvements that fail to comply with the City's standards and specifications. The City shall enforce the guarantee provided by agreement(s).

(e) Disclaimer. Approval of a Preliminary Plat or Final Plat by the Commission, or Construction Plans by the Director of Engineering Services, shall not constitute acceptance of any of the public improvements required to serve the subdivision or development. No public improvements shall be accepted for dedication by the City except in accordance with this Section.

(f) Acceptance of Improvements for Land in Extraterritorial Jurisdiction (ETJ). Where the improvements to be constructed under an Improvement Agreement are located within the City's ETJ and are to be dedicated to a County, the Director of Engineering Services shall inform the County that the public improvements have been constructed in accordance with approved Construction Plans, and are ready for acceptance by the County.

(g) Maintenance Bond Following Acceptance. The applicant shall furnish to the Director of Engineering Services a sufficient maintenance bond with a reputable and solvent corporate surety registered with the State of Texas, in favor of the City, to indemnify the City against any repairs. The bond shall be in effect for two (2) years from the date of final acceptance of the entire project. The bond, which is a part of the requirements for final acceptance, shall be a minimum of one hundred and ten percent (110%) of the value of the work constructed. Final acceptance shall be withheld until said maintenance bond is furnished to the City in a form acceptable by the City Attorney. Once the maintenance bond has been examined and approved by the City Attorney, the City Attorney shall certify the bond is valid and enforceable as provided by law prior to recommending acceptance by the Director of Engineering Services. The applicant shall reimburse

the City for all related legal costs for review (this reimbursement shall be paid in full prior to filing of the Final Plat).

SECTION 6

(Reserved for future use…)

(This page intentionally left blank.)

SECTION 7: SPECIAL EXTRATERRITORIAL JURISDICTION POLICIES & REGULATIONS

SECTION 7.01 GENERAL POLICIES IN THE EXTRATERRITORIAL JURISDICTION (ETJ)

(a) **Application of Requirements.** Unless otherwise stated within this Subdivision Ordinance, all standards, specifications and regulations shall apply to development within the City's extra-territorial jurisdiction (ETJ).

(b) **Extension of Services.** Given that land proposed for development in the City's ETJ must be served adequately by essential public facilities and services, including those related to adequate water distribution, wastewater collection and treatment, streets, pedestrian circulation, storm drainage conveyance, and park and recreational facilities, the following policies for the provision of infrastructure services into the City's ETJ shall apply:

(1) It is in the City's best interest to encourage development in areas adjacent to compatible development already receiving City services, and particularly where those services have excess capacity.

(2) It is in the City's best interest to discourage development in remote areas as well as those areas that exhibit environmental hazards.

(3) It is in the City's best interest to annex areas that:

a. Need to be protected in order to prevent or reduce flood damage in existing urban areas;

b. Possess unique physical characteristics;

c. Have requested City services; or

d. Minimize the City's fiscal liability.

(4) It is in the City's best interest to withhold all water and sewer extensions outside the City's limits except in instances where the extension will serve a large-volume user(s) who has agreed in writing to annexation at a predetermined date, and who has demonstrated that a significant community benefit will accrue to the City if it provides such service outside the City's limits, and where no significant fiscal liabilities will be incurred by the City.

(5) It is in the City's best interest to provide services, other than water and wastewater service, to individual users beyond the City's limits:

a. Upon request and under contracts or cost-sharing arrangements that minimize future City fiscal liability;

b. Upon request and under contracts or cost-sharing arrangements that encourage compact development;

c. Upon request and under contracts or cost-sharing arrangements that ensure compliance with City subdivision, building, electrical, plumbing and fire codes; and

d. When it is not in the City's best interest to annex the areas to be served.

(6) The City shall therefore provide for extension of public facilities and services only under the following circumstances:

a. Such extension is part of an annexation agreement that provides for development consistent with established City objectives and policies, such as the Comprehensive Plan;

b. Such extension allows the City to retain its right under State law to annex the property in the future;

c. The quality of the development that is occurring is consistent with City standards (if applicable);

d. The use or development offers significant public benefits to the City; and

e. The proposed development and land uses comply with City Building and Fire Codes (as agreed to in an annexation agreement with the City).

(c) Design and Construction Standards for Public Improvements in the City's Extraterritorial Jurisdiction (ETJ). All public improvements constructed in conjunction with a new development in the City's ETJ shall be designed, engineered and constructed in accordance with the City's standards as set forth in the *Engineering Standards*, and all other applicable City master plans (e.g., water and wastewater master plans, master storm drainage plans, the *Comprehensive Plan*, etc.).

SECTION 7.02 COLLIN & DENTON COUNTY REGULATIONS

(a) Interlocal Agreements. The City has executed separate interlocal cooperation agreements as authorized under Chapter 242 of the Texas Local Government Code with both Collin County and Denton County.

(1) Collin County has assigned to the City its authority to approve plats in the City's ETJ. The agreement also provides for the City to enforce its subdivision regulations, together with specified regulations of Collin County, within the City's ETJ. (For specific responsibilities, see the separate interlocal agreement, Resolution No. 06-02-28R.)

(2) Denton County has assigned to the City its authority to approve plats in the City's ETJ. The agreement also provides for the City to enforce its subdivision regulations, together with specified regulations of Denton County, within the City's ETJ. (For specific responsibilities, see the separate interlocal agreement, Resolution No. 02-03-66R.)

(b) Conflict of Regulations. In the event that the subdivision rules and regulations of the applicable County provide a more stringent standard than the City's, then the more stringent County standard shall apply.

SECTION 7.03 CITY PARTICIPATION IN IMPROVEMENTS IN THE EXTRATERRITORIAL JURISDICTION (ETJ)

(a) Improvements. The City shall not be required to participate in the cost of any improvements where such improvements required by this Ordinance are outside the corporate limits of the City (i.e., they are within the City's ETJ area).

(b) Certificates of Occupancy/Utility Connections.

(1) A Certificate of Occupancy for non-residential and multifamily projects within the City's ETJ shall not be issued until a Letter of Final Acceptance (refer to Section 5.05(d)) has been issued by the City, and a copy of such Letter has been submitted to the Building Official by the developer, unless otherwise authorized by the City Manager or designee.

(2) Utility connections for all developments in the City's ETJ shall not be issued until a Letter of Final Acceptance (refer to Section 5.05(d)) has been issued by the City, and a copy of such Letter has been submitted to the Building Official by the developer, unless otherwise authorized by the City Manager.

(This page intentionally left blank.)

SECTION 8: SUBDIVISION REQUIREMENTS

SECTION 8.01 GENERAL POLICIES

(a) Conformance to Plans.

(1) Public Improvements. Proposed public improvements serving new development shall conform to and be properly related to the public facilities elements of the Comprehensive Plan, other adopted master plans for public facilities and services, and applicable capital improvements plans, and shall at a minimum meet the service levels specified in such plans.

(2) All Plats within the City and its ETJ, and corresponding Construction Plans, shall provide for thoroughfares as shown in the Comprehensive Plan. The alignment and right-of-way width of all proposed thoroughfares shall be in general conformance with the Comprehensive Plan. Minor adjustments to thoroughfare alignments may be allowed without amending the *Comprehensive Plan* if the Director of Development Services believes the new alignment meets the spirit and intent of the *Comprehensive Plan* and will not compromise public safety or traffic efficiency. The design and construction of all proposed thoroughfares shall be in conformance with the City's *Engineering Standards*, and shall be subject to approval by the Director of Engineering Services. Such approvals shall be required prior to any Plat approval.

Comprehensive Plan Amendment. If a significantly different roadway alignment or type (from what is shown on the *Comprehensive Plan*) is proposed, then the *Comprehensive Plan* shall be amended prior to any Plat approval. Submission of a Traffic Impact Analysis (TIA) of the proposed amendment by the developer may be required if the Director of Development Services and the Director of Engineering Services determine that such an analysis is necessary to fully assess the impact of the proposal upon the City's overall thoroughfare network.

(3) Water and Wastewater Plans. The design and construction of the water system and wastewater system to serve the development shall be in conformance with the City's master plans for water and wastewater facilities, and with the *Engineering Standards*, and shall be subject to approval by the Director of Engineering Services prior to approval of the Construction Plans and the Final Plat.

(4) Storm Drainage Standards. The design and construction of the storm drainage system to serve the development shall be in conformance with but not limited to the City's master plans for storm water drainage, with the City's Storm Drainage Ordinance, and with the *Engineering Standards*, and shall be subject to approval by the Director of Engineering Services prior to approval of the Construction Plans and the Final Plat.

(b) Adequate Public Facilities.

(1) Adequate Services for Areas Proposed for Development. Land proposed for development in the City and in the City's ETJ shall be served adequately by essential public facilities and services, including but not limited to water distribution, wastewater collection and treatment, roadways, pedestrian circulation, storm drainage conveyance, and park and recreational facilities. Land shall not be approved for platting or development until adequate public facilities necessary to serve the development exist or provisions have been made for the facilities, whether the facilities are to be located within the property being developed or offsite.

a. *Street Access.* A Plat will not be approved unless all of the proposed lots have safe and reliable street access for daily use and emergency purposes.

1. A Plat will not be approved unless all of the proposed lots have direct access to an improved public street (or a public street that will be improved during construction of the proposed development) to the City's minimum design and paving standards, or to an approved public way that is connected to an improved public street.
2. Except for lots which are provided access from an approved cul-de-sac, all lots within a development shall have at least two (2) means of access or approach. Where development phasing or constraints of the land prevent the provision of a second, separate means of access, the City may accept a temporary street connection provided that a second permanent access point can be reasonably anticipated with future development of adjacent properties.
3. For properties situated adjacent to an existing or planned median-divided thoroughfare, at least one (1) of the required access points shall occur at, or through access easement connection to, a median opening. (See Diagram 8.01-1)

b. *Water.* A Plat will not be approved unless all of the proposed lots are connected to a public water system which is capable of providing adequate water for health and emergency purposes.

1. Except for lots along an approved cul-de-sac, all lots shall be provided service connections from a looped water main providing water flow from two (2) directions or sources.
2. Water service shall be sufficient to meet the fire flow requirements of the proposed development, except where a suitable alternative means of fire protection is approved by the Fire Chief.
3. The City may require the phasing of development and/or improvements to the water system to ensure adequate fire protection.

c. *Wastewater.* A Plat will not be approved unless all of the proposed lots are served by an approved means of wastewater collection and treatment.

1. The projected wastewater discharge of a proposed development shall not exceed the proposed capacity of the wastewater system.

2. The City may require the phasing of development and/or improvements to the sanitary sewer system so as to maintain adequate wastewater capacity.

d. *Storm Drainage.* Increased storm water runoff attributable to new development shall not cause impacts to adjoining, upstream or downstream properties. Impacts are defined as an increase in runoff between pre and post development. Where the projected runoff from a new development exceeds runoff from pre development conditions, the City may require the phasing of development, the use of control methods such as retention or detention, obtaining off-site drainage easements, and/or the construction of off-site drainage improvements as means of mitigation.

(2) Property Owner's Responsibilities. The property owner shall be responsible for, but not limited to, the following:

a. Dedication and Construction of Improvements. The property owner shall dedicate all rights-of-way and easements for, and shall construct and extend, all necessary on-site and off-site public improvements for water distribution, wastewater collection and treatment, streets, storm drainage conveyance, and other improvements that are necessary to adequately serve each phase of a proposed development at service levels that are consistent with the City's applicable master facilities plans and construction design standards.

b. Abutting Substandard Streets. Where a substandard street abuts or traverses a proposed development, the City may require the property owner to dedicate additional right-of-way and to improve the street to the City's current design and construction standards as set forth in the *Engineering Standards*, and in the *Comprehensive Plan*. Such requirements to improve the substandard street to the City's current standards shall only be imposed following careful review of factors including, but not limited to:

1. The impact of the new development on the street;
2. The timing of the development in relation to need for the street; and
3. The likelihood that adjoining property will develop in a timely manner.

In the case of frontage or service roads for state or federally designated highways, the entire abutting right-of-way shall be dedicated and improved to that agency's applicable construction design standards if such improvement is approved by the agency. (Also refer to Section 8.04 of this Ordinance, and the City's Impact Fee Ordinance.)

c. Facilities Impact Studies. The City may require that a developer prepare a comprehensive Traffic Impact Analysis (TIA), flood or drainage study or downstream assessment, or other facilities impact study(ies) in order to assist the City in determining whether a proposed development will be supported with adequate levels of public facilities and services concurrent with the demand for the facilities created by the development. The study(ies) shall identify, at a minimum:

1. The adequacy and capacities of existing facilities;

2. The nature and extent of any current deficiencies; and
3. The public improvements that will be needed to meet adequate levels of service assuming development at the intensity proposed in the application.

The study(ies) shall be subject to approval by the Director of Engineering Services prior to approval of the Preliminary Plat and the Construction Plans. The City also may require, at the time of approval of a subsequent application (e.g., Final Plat), an update of a facilities impact study(ies) approved in connection with a prior application (e.g., Preliminary Plat).

d. Future Extension of Public Facilities. The property owner shall make provisions for future expansion of the public facilities as needed to serve future developments, subject to the City's oversize participation policies, if applicable;

e. Operations and Maintenance of the Public Facilities. The property owner shall provide for all operations and maintenance of the public facilities, or shall provide proof that a separate entity will be responsible for the operations and maintenance of the facilities;

f. Fiscal Security. The property owner shall provide all fiscal security required for the construction of the public facilities;

g. Approvals from Utility Providers. The property owner shall obtain all necessary approvals from the applicable utility providers other than the City, and shall submit written verification of such approvals to the City with the Construction Plans; and

h. Compliance with Utility Providers. The property owner shall comply with all requirements of the utility providers, including the City and applicable drainage districts.

(3) Rough Proportionality; Fair Share. There is a direct correlation between the increased demand on public facilities and systems that is created by a new development, and the City's requirements to dedicate rights-of-way and easements and to construct a fair and proportional share of public improvements that are necessary to offset such impacts such that new development does not negatively affect the City as a whole. The City desires that a new development project contribute its fair and proportional share of such costs.

SECTION 8.02 WATER & WASTEWATER REQUIREMENTS

(a) Water and Wastewater Basic Policy.

(1) Construction Requirements.

a. All public water and wastewater mains shall be located in the frontage of the property along streets, or in easements adjacent to the development in order to provide service to adjacent property.

b. Public water and/or wastewater mains shall not be located within a private street, drive or access easement unless a public utility easement is provided.

c. The minimum easement width for water or wastewater mains shall be fifteen (15) feet, or as determined by the Director of Engineering Services. Where it is necessary for water and wastewater facilities to be located within the same easement, the easement shall be a minimum of twenty (20) feet in width, or as determined by the Director of Engineering Services.

d. No portion of a structure (including, but not limited to, walls, foundations, porches/patios and porch/patio covers, canopies, roof extensions/overhangs, chimneys, fire flues, etc.) shall encroach over or into any easement, except that wall-attached window awnings, "bay" style windows, and roof eaves shall be allowed to encroach into an easement a maximum of twenty-four inches (24") upon approval of the Director of Engineering Services.

e. A water or wastewater easement between two lots must fall entirely on a single lot.

f. Easements shall be dedicated for exclusive use for water and wastewater facilities and shall be shown on the Final Plat for the specific purpose intended. When it is necessary for additional utilities to be placed within an easement, additional width shall be provided and the easement shall be labeled for its intended purpose on the Final Plat.

g. When it is necessary to relocate or replace an existing water or sewer facility to accommodate a proposed subdivision, the developer is responsible for all costs associated with the relocation, except as agreed to by City Council for oversize participation.

(2) Construction Plans. Plans for construction of all water and wastewater facilities required by these regulations shall be prepared in accordance with the requirements and specifications contained in the *Engineering Standards*, the regulations of the Texas Commission on Environmental Quality (TCEQ), National Sanitation Foundations (NSF), Texas Department of Insurance, Insurance Services Office, and the City's current adopted Fire Code, which are incorporated by reference and made a part hereof. Plans for the improvements must be prepared by a licensed engineer and accepted by the Director of Engineering Services.

(3) Acquisition of Easements. The developer shall be responsible for the acquisition of all required off-site easements. If the developer is unable to acquire the necessary off-site easement, the City shall be provided with easement or right-of way survey documents and exhibits, documentation, including evidence of a reasonable offer made to the affected property owner. Upon receiving a written request for assistance, the City may, at its option, acquire these easements either through negotiations or through condemnation in appropriate situations. The developer shall reimburse the City for the costs of acquiring the necessary easements including but not limited to attorney fees, expert fees and title searches.

(b) Preliminary Utility Plan.

(1) Concurrent with the submission of a preliminary plat, replat or minor plat, the developer shall submit a map or plan showing the location and size of water and wastewater mains, which will be required to provide adequate service and fire protection to the lots specified in the proposed plat. Plans and specifications for fire hydrant systems shall be submitted to the Fire Marshal for review prior to construction.

(2) Plan Document. The plan shall be prepared as noted in the City's Development Application Handbook.

(3) Coordination with other Utility Providers

a. *Preliminary Plat*. When the subdivision is located in an area served by a utility provider other than the City, the developer must provide a water system analysis.

b. *Minor Plat, Replat*. When a subdivision is located in an area served by a utility provider other than the City, the developer must provided a letter from the utility provider stating that facilities existing in the area to provide adequate domestic service and fire protection. If the City has reason to believe that there may be water supply or pressure concerns, a water system analysis may be required.

c. *Final Plat*. The final plat will not be filed with the County until a letter has been provided from the utility provider stating that they have accepted the plans for construction.

(c) Miscellaneous Requirements.

(1) No building shall be constructed over an existing wastewater, lateral, water main or storm drain unless approved in writing by the Director of Engineering Services and approved by the City Council. *(Ord. No. 12-06-42)*

(2) Ownership and maintenance of water and wastewater mains and service connections shall be regulated as follows.

a. The title to all wastewater lines constructed, including wastewater service connections located in a right-of-way or dedicated easement, shall be vested in the City or the applicable utility provider.

b. The developer, or single customer, shall be responsible for all maintenance of the wastewater service connection, unless replacement of the service is required under

the roadway or pavement. When replacement is determined to be necessary by the Director of Engineering Services, the City shall assume the responsibility for replacement of that portion under the pavement.

c. The title to all water mains and water meters constructed, and installed, including the title to service connections, shall be vested in the City or the applicable utility provider.

(3) The City makes no guarantee that water supply or wastewater capacity will be available at any particular time or place.

(4) Water or wastewater service lines shall not cross any adjacent lot. The public main shall be extended so as not to require the service to extend across another lot. Water and wastewater service lines shall be maintained by the property owner.

(5) Public water and wastewater mains adjacent to federal, state, or county roadways shall be constructed outside the right-of-way in a separate easement unless otherwise agreed by those agencies and the City.

(d) Water.

(1) Design & Construction.

a. Installation of Water Facilities. Where water is to be provided through the City system, the property owner shall install adequate water facilities, including fire hydrants, in accordance with the City's *Engineering Standards,* the adopted Fire Code, the current Rules and Regulations for Public Water Systems of the Texas Commission of Environmental Quality (TCEQ), and the firefighting standards of the Texas Board of Insurance. If any such requirements conflict, the most stringent requirement shall apply.

b. Facilities for Health and Safety Emergencies; Alternative Water Sources. All water facilities connected to the City's water system shall be capable of providing water for health and emergency purposes, including fire protection and suppression. Water supply facilities shall be in accordance with the *Engineering Standards*. The design and construction of water system improvements and alternative water sources shall also comply with the following standards:

1. Design and construction of a water source on the site shall be in accordance with applicable regulations of the Texas Commission of Environmental Quality (TCEQ).
2. Design and construction of water service from the City shall be in accordance with the standards in the City's *Engineering Standards*.
3. Design and construction of a fire protection and suppression system shall be in accordance with the standards in the *Engineering Standards*, and in accordance with the City's Fire Department and adopted Fire Code.

(2) Location.

a. Shown on Construction Plans. The location and design of all fire hydrants, all water supply improvements and the boundary lines of special districts, private systems and certified water service areas, indicating all improvements proposed to be served, shall be shown on the Construction Plans.

b. Extension of Lines. Extension of water lines shall be made along the entire frontage of the development adjacent to a street. If the subdivision is not adjacent to a street, the extension of water lines shall be accomplished in such a manner as to allow convenient future connections to said lines by new subdivisions.

c. Waiver for Requirement. If new subdivisions will never be constructed beyond a developing subdivision due to physical constraints, the Director of Engineering Services may approve a Minor Waiver for this requirement in accordance with Section 9.01 of this Ordinance prior to action on the Construction Plans or prior to action on any Plat.

(3) Cost of Installation. The cost of installing all water supply improvements to be made by the developer, including off-site improvements, shall be included in the performance guarantees and Improvement Agreement, if applicable (refer to Section 5.04).

(4) Cost of Extension. Where the City's water distribution system is not planned to be extended in time to serve a proposed new development, all necessary water facilities to serve such development shall be provided by and at the expense of the developer. If oversizing of a water facility is deemed necessary by the Director of Engineering Services for future developments, then the City may participate in such oversizing costs as part of a Development Agreement.

(5) Alternative Water Systems. Developments may be approved with alternative water facilities according to the following criteria:

a. Water well operation and quality shall meet the minimum requirements of the Texas Commission on Environmental Quality, Collin and Denton Counties, City health ordinances, and all other regulatory agencies, if applicable.

b. Water wells may not be used for commercial sale of water.

c. The cost to tie onto the public water system must exceed the certified initial capital cost of a well by twenty-five percent (25%). All costs and engineering designs shall be submitted by a licensed professional engineer. All costs and engineering designs shall be subject to approval by the Director of Engineering Services. If a residence is located within one thousand feet (1,000') of a domestic water supply, that residence must hook up to that service.

(6) Individual Wells.

a. Within the City's Extraterritorial Jurisdiction (ETJ). Individual wells within the City's ETJ shall be subject to approval by the applicable County health official, and this approval shall be documented by the health official's signature on the water system

statement on the Preliminary and Final Plat. The property owner must submit with the Preliminary and Final Plat applications a certificate from a professional engineer who is registered, or a geoscientist who is licensed, to practice in the State of Texas verifying the adequacy of the proposed well water supply and potability prior to Preliminary Plat and Construction Plans approvals.

b. Compliance with Other Regulations. Installation, operations and maintenance of individual wells shall comply with City standards, regulations of the Texas Commission on Environmental Quality (TCEQ), and any other applicable County or State rules and regulations. In the event of conflict among these regulations, whichever is the most stringent shall apply.

(e) Wastewater.

(1) Extension of and Connection to the City's Wastewater Collection System. Extension of, and connection to, the City's sanitary sewer system shall be required for all new developments within the City's limits. Extension of, and connection to, the municipal sewer system shall also be required for new developments within the City's ETJ for any proposed development, lot, tract or parcel that is less than one (1) acre in size. The City is not in any way obligated to allow extension of municipal sewers outside the City's limits. The required extension of, and connection to, the municipal sewer system may be waived as a Minor Waiver, in accordance with Section 9.01, by the Director of Engineering Services if the Director of Engineering Services determines that such extension would require unreasonable expenditures and that an on-site wastewater disposal system (see Section 8.02(e)(5)) will function properly and safely.

(2) Design & Construction. It is the policy of the City to require all wastewater collection lines to have gravity flow. The use of lift stations and force mains is prohibited unless a gravity design is impractical, as determined by the Director of Engineering Services. The location, design and sizing of all wastewater improvements shall be shown on the Construction Plans and are subject to approval by the Director of Engineering Services.

(3) Cost of Installation. The cost of installing all wastewater improvements to be made by the developer, including off-site improvements, shall be included in the performance guarantees and Improvement Agreement, if applicable (refer to Section 5.04).

(4) Extension.

a. Cost. Where the City's wastewater system is not planned to be extended in time to serve a proposed new development, all necessary wastewater facilities to serve such development shall be provided by and at the expense of the developer. If oversizing of a wastewater facility is deemed necessary by the Director of Engineering Services for future developments, then the City may participate in such oversizing costs as part of a Development Agreement.

b. Future Extensions. Pipe stub-outs shall be located in manholes to facilitate the future extension of wastewater lines. The Director of Engineering Services will determine the location and size of the stub-outs.

(5) On-Site Wastewater Disposal Systems.

a. In cases where the Director of Engineering Services determines that extension of, and connection to, the City's sewer system is impractical or not feasible, and where the Director of Engineering Services approves the use of an on-site wastewater disposal system(s), such on-site system(s) shall provide adequate sewage disposal for all lots, tracts, parcels and structures in the development that cannot be connected to the City's sewer system.

b. All on-site wastewater disposal systems shall be designed, permitted, constructed, operated and maintained in compliance with all applicable local, County and State regulations, and a permit for such system shall be acquired prior to Preliminary Plat and Construction Plans approvals.

c. On-site wastewater disposal facilities requiring soil absorption systems may be prohibited where such systems will not function properly due to high ground water, flooding, unsuitable soil characteristics, or other topographical or environmental issue.

d. Each lot, tract, parcel and structure that utilizes an on-site wastewater disposal system shall have a minimum land area of at least one (1) acre.

e. No portion of any on-site wastewater disposal system shall be constructed within a minimum one hundred and fifty foot (150') radius around any water well either on-site or on other properties.

f. All properties and structures that are allowed to utilize an on-site wastewater system shall, at the owner's expense or using funds escrowed by the developer (see below), tie onto the City's sanitary sewer system when such municipal system is extended to the service area as determined by the Director of Engineering Services. Such connection to the City's system shall occur within one (1) year after the system is made available to the area. The developer of any new subdivision shall provide escrow funds, the amount of which shall be subject to approval by the Director of Engineering Services, for this future connection to the City's sanitary sewer system.

g. In order to protect the public health, safety and welfare, an existing on-site wastewater disposal system shall be upgraded, or reconstructed if necessary, to comply with the City's standards by the owner, at the owner's expense, if the operation of the facility does not comply with government regulations or if it causes objectionable odors, unsanitary conditions, pollution, etc.

SECTION 8.03 DRAINAGE AND ENVIRONMENTAL STANDARDS

(a) Drainage and Storm Water Management Policies.

(1) Easements. Drainage easements shall be dedicated for public drainage features in accordance with requirements of this ordinance. Drainage easements and features shall be included as a portion of buildable (habitable structure) lot(s) and not as a lot by itself unless specifically authorized by the Director of Engineering Services. If a large development related feature is authorized on a separate lot, a home owner's association is required. Storm drainage easements shall be located along side property lines, and such easements shall be contained fully on one lot or tract, and shall not be split across the property line between two (2) lots or tracts.

(2) Storm Water Quality. Designs for new development shall manage storm water in a manner that protects water quality by addressing the development's potential to cause erosion, pollution, siltation, and sedimentation in the MS4 and natural Major Creeks. The goal is to maintain after development, to the maximum extent practicable, the predevelopment characteristics in the Major Creek, which ultimately receives storm water runoff from the development. It is the developer's responsibility to ensure that designs for new development meet the storm water management requirements in the General Permit for Storm Water Discharges from Construction Activities issued by the TCEQ and its successor agencies. This permit includes the requirement for measures that will be installed during construction to control pollutants in storm water discharges after construction operations have been completed.

(3) Storm Water Runoff. Storm water runoff shall be calculated anticipating a fully developed watershed. The Comprehensive Plan, existing land use, and zoning maps shall be used to determine fully developed conditions. The Director of Engineering Services reserves the right to review the determination of fully developed conditions and may require revisions.

(4) Minimum Finish Floor Elevations. The Director of Engineering Services may require minimum finish floor elevations (MFF) to provide flood protection on certain lots contained within the subdivision. The MFFs shall be shown on the plat. These elevations shall incorporate the most current floodplain management criteria or other criteria as necessary to avoid damages. The minimum finish floor elevation shall be two feet above the fully developed 100-year water surface elevation where the MFF is associated with a natural Major Creek or open channel. When the MFF is necessitated by situations other than a natural Major Creek or open channel, the MFF shall be set by the developer's engineer and agreed upon by the City.

The following note or an amended version appropriate to the specific plat shall be added to any plat upon which the Director of Engineering Services requires the establishment of minimum finish floor elevations:

"The City reserves the right to require minimum finish floor elevations on any lot contained within this addition. The minimum elevations shown are based on the most current information available at the time the plat is filed and are subject to change."

(5) Off-site Drainage.

a. When any proposed development requires off-site grading where storm water runoff has been collected or concentrated, it shall not be permitted to drain onto adjacent property except in existing Major Creeks, channels, storm sewers or streets unless one of the following is provided:

1. Notarized Letter of Permission. The letter shall state that the permission shall bind the owner of the affected property and be a covenant running with the land. It shall also refer to the plans for the improvements creating the need for the permission. The letter shall be filed with the applicable County.

2. Drainage Easement. A drainage easement shall be dedicated for Major Creeks, ditches, or drainage channels and shall be of a width sufficient to comply with the criteria outlined in the *Engineering Standards*.

b. In the event the developer cannot obtain a notarized Letter of Permission or a drainage easement, the developer shall provide the City with documentation of all efforts, including evidence of a reasonable offer made to the affected property owner, and one of the following:

1. Written Request for Assistance. The City may pursue acquisition of these easements through negotiations. If the negotiations are unsuccessful, the request may, at the developer's option, be submitted to City Council for consideration of acquisition through eminent domain. Any expenses, including attorney's fees, incurred by the City to acquire or attempt to acquire an easement shall be paid by the developer.

2. Notarized Letter. With the concurrence of the Director of Engineering Services, the developer may execute a notarized letter stating the developer shall save and hold harmless the City from any and all claims or suits for damage arising from storm water runoff. The letter shall be in a form approved by the City Attorney.

(b) Preliminary Storm Water Management Plan.

(1) A preliminary storm water management plan (SWMP) shall be prepared for all developments in accordance with the requirements set forth in the City's Development Application Handbook. The purpose of the SWMP is to identify permanent water quality feature opportunities for the development.

(2) The preliminary SWMP shall be prepared in coordination with the preliminary drainage plan on all projects where both are required. The preliminary SWMP and the preliminary drainage plan may be shown on the same sheet. When a preliminary drainage plan is not required, the preliminary SWMP shall indicate the existing drainage patterns and runoff coefficients and the proposed changes to these items.

(3) The preliminary SWMP must comply with the standards and criteria outlined in this ordinance, the *Engineering Standards*, and the Erosion Siltation Control Ordinance. The plan may satisfy the storm water management portion of the Storm Water Pollution Prevention Plan (SWPPP) that is required for construction activities; however, the SWMP is

not a substitution for the SWPPP. The City's review of the preliminary SWMP does not constitute acceptance of the final SWMP or the final development plans.

(4) The developer shall provide a preliminary SWMP for the area proposed for development. For amended plats or plats with a previously accepted preliminary SWMP, the accepted preliminary SWMP shall be enforced unless a revised preliminary SWMP is required.

(5) Three (3) paper copies of the preliminary SWMP plan shall be submitted with the submittal of a preliminary plat, replat, or minor plat for review and acceptance. The plan shall be labeled as "Preliminary." Upon acceptance of the plan, the plan shall be signed, sealed, and dated by the engineer, or shall contain a statement showing the engineer's name and license number and affirming the plan was prepared under the direction of the engineer and that the plan is preliminary.

(c) Preliminary Drainage Plan.

(1) This plan shall show the watershed affecting the development and how the runoff from the fully-developed watershed will be conveyed to, through, and from the development. It must comply with the standards outlined in this Ordinance and the drainage design criteria found in the *Engineering Standards*. The preliminary drainage plan is a guide for the detailed drainage design. The review of the preliminary drainage plan does not constitute final drainage plan approval or authorize a waiver to this Subdivision Ordinance.

(2) For any property involved in the development process, a preliminary drainage plan shall be provided, at the developer's expense, for the area proposed for development. For property with a previously accepted preliminary drainage plan, the accepted preliminary drainage plan may be submitted and enforced unless a revised preliminary drainage plan is required by the City due to lot reconfiguration or other conditions created by the new plat. The Director of Engineering Services may waive the requirement for a preliminary drainage plan if the submitted plat is not anticipated to cause any significant change in runoff characteristics from a previously accepted drainage study or for single residential properties where no drainage problems are anticipated. If the applicant requests a waiver in writing, a copy of any previous drainage plan shall be provided.

(3) Three (3) paper copies of the preliminary drainage plan shall be submitted with the submittal of a preliminary plat, replat, or minor plat for review and acceptance. The plan shall be labeled as "Preliminary." The plan shall be stamped by and dated by the engineer.

(d) Floodplain Development Requirements.

(1) All development proposed adjacent to or within the 100-year floodplain shall be in accordance with the City's Flood Hazard Prevention Ordinance and this Ordinance.

(e) Major Creeks.

(1) 100-Year Floodplain Restrictions. For the health, safety and welfare of the City's residents and for the conservation of water, storm drainage and sanitary sewer facilities, the City prohibits development of any portion of a property that lies within the 100-year floodplain of any Major Creek. Major Creeks shall be protected from destruction or damage resulting from clearing, grading, and dumping of earth, waste or other foreign materials. Clearing, grading, excavation or filling of any area within the 100-year floodplain or within any Major Creek shall be prohibited unless authorized in writing by the City.

(2) Major Creek Restrictions. All Major Creeks (See Diagram 8.03-1) shall be maintained in an open natural condition. Each Major Creek is subject to the following requirements for all types of development:

a. The 100-year floodplain and Erosion Hazard Setback shall be dedicated on the Final Plat to the City as a single lot or may be owned and maintained by an HOA, pursuant to Section 8.11 of this Ordinance. At no time shall any portion of the 100-year floodplain exist or be within any single-family or two-family residential lot. Erosion Hazard Setback requirements are located in the *Engineering Standards.*

b. The Commission may waive any of these dedication requirements for a Replat that was originally platted prior to the adoption of this requirement (i.e., the adoption date of the City's Major Creek Ordinance No. 99-09-25, which was on September 21, 1999).

(3) Access. Access shall be dedicated for maintenance purposes as required by the Director of Engineering Services (See Diagrams 8.03-2 and 8.03-3).

(4) Retaining Wall(s). A retaining wall(s) may be allowed between a house and the Major Creek as approved by the Director of Engineering Services.

(5) Adjacent Street(s) Widths. The size of streets adjacent to a Major Creek shall have a minimum right-of-way width of fifty feet (50'). The City shall participate in fifty percent (50%) of the paving costs when the City determines that a collector-size street, sixty feet (60') of right-of-way width, is necessary for traffic safety, public access, and/or public on-street parking.

(6) Adjacent Street(s) Types (see Diagram 8.03-3).

a. Phases. Street requirements shall be reviewed per development phase.

b. Parallel Streets. A minimum 60% of the linear frontage of the Major Creek shall be adjacent to a parallel street.

c. Cul-de-sac Streets. No more than one cul-de-sacs in a row. Cul-de-sacs shall comply with the following criteria (See Diagram 8.03-4):

1. A minimum 50% of an adjacent cul-de-sac bulb shall be open to the Major Creek and no residential lot shall encroach within the area between this line and the Major Creek.

2. An entry monument(s) or feature(s) as well as landscaping shall be provided at the end of the cul-de-sac and a pathway of a minimum 12 feet in width shall be provided to the Major Creek as approved by the Director of Development Services.

(7) Setbacks. Any side lot line adjacent to a Major Creek shall provide a twenty-five foot (25') building setback (See Diagram 8.03-2).

(8) Fences. Fences adjacent to a Major Creek shall comply with the following criteria (See Diagram 8.03-5):

a. Have a maximum fifty percent (50%) opacity;

b. Have a height of six (6) feet to eight (8) feet as measured from grade at that location;

c. Ornamental metal fences, with either masonry columns or a masonry base of a maximum three (3) feet in height shall be located along the rear and side of the lots, are subject to City review and approval by the Director of Development Services; and

d. The lot owner is responsible for the maintenance of the fence.

(9) Exceptions for Planned Development. For properties which have an approved Concept Plan that is part of a Planned Development Ordinance adopted prior to the effective date of the Major Creek Ordinance (Ordinance No. 99-09-25), Section 8.03(e)(6) shall not apply; provided, however, said properties are subject to the following conditions:

a. Any lot that backs to the 100-year floodplain shall have a minimum rear yard setback of twenty-five feet (25');

b. Any lot that sides to the 100-year floodplain shall have a minimum side yard setback of fifteen feet (15').

c. Alternating cul-de-sacs and looped streets shall be provided at intervals not to exceed twelve-hundred feet (1,200') for access to the 100-year floodplain; and

d. The 100-year floodplain shall be available to public access from the end of a cul-de-sac.

(10) Additional Studies. At the request of the City, the property owner shall submit additional studies, including but not limited to the following, as deemed appropriate and necessary by the City, as part of the Preliminary Plat submittal requirements. These studies shall be considered during review and approval of the Preliminary Plat.

a. Wetland Delineation Study;

b. Habitat Study;

c. Vegetative Study;

d. Erosion Hazard Setback Study;

e. Storm Drainage Study;

f. Riparian (i.e., Tributary) Study;

g. Flood Study; and

h. Downstream Assessment Study.

SECTION 8.04 STREET REQUIREMENTS

(a) Streets Basic Policy.

(1) Street Improvements. In platting a new development, the property owner shall provide additional right-of-way needed for existing or future streets as required by the *Engineering Standards* and as shown on the Comprehensive Plan.

(2) Improvement of Existing Substandard Streets.

a. When a proposed residential or nonresidential development abuts one or both sides of an existing substandard street, the developer shall be required to improve the substandard street and its appurtenances (such as curbs and gutters, sidewalks, barrier-free ramps, street trees, etc.) to bring the same to City standards, or to replace it with a standard City street, at no cost to the City other than as may be provided in the City's cost-sharing policies, including the City's Impact Fee Ordinance that are in effect at the time of Final Plat approval.

b. If the proposed development is located along only one side of a substandard street, and if the City makes a determination that it is not feasible to improve the full width of said substandard street at that time the City may require the developer to pay into escrow, in accordance with Section 5.04, funds for the future improvement of the street as a condition of Final Plat approval for the development.

c. The developer may request a Major Waiver (see Section 9.01) or may file a proportionality appeal (see Section 9.02) if the requirements for improving an existing substandard street imposed by this Section 8.04(a)(2) would result in unnecessary hardship or would be disproportional to the impacts generated by the development on the City's street system.

(3) New Perimeter Streets.

a. When a proposed residential or nonresidential development is developed abutting an existing or planned major thoroughfare, minor thoroughfare or collector street (as shown on the Comprehensive Plan), the developer shall construct a portion of the abutting street and its appurtenances (such as curbs and gutters, sidewalks, barrier-free ramps, street trees, etc.) to the City's design standards for that type of street (per the *Engineering Standards*). If the Director of Engineering Services makes a determination that it is not feasible to construct the abutting street and its appurtenances at that time, the City may require the developer to pay into escrow, in accordance with Section 5.04, funds for the future construction of the street as a condition of Final Plat approval for the development.

(4) New Internal Streets.

a. All new streets and their appurtenances internal to a proposed residential or nonresidential development shall, at a minimum, be built to a width and design which will adequately serve that development, and shall conform to the City's design standards in the *Engineering Standards*. If oversizing of an internal street is deemed necessary by the Director of Engineering Services for traffic safety or efficiency (such as adjacent to a school or park site), then the City and/or the applicable Independent School District may participate in such oversizing costs as part of a Development Agreement with the developer.

b. Streets which temporarily dead end at power lines, railroads or similar rights-of-way shall be constructed for at least one-half the distance across these rights-of-way, or provision shall be made to place the construction cost for said improvements in escrow with the City in accordance with Section 5.04.

c. When, in the Director of Engineering Services' judgment, it is not feasible to construct an internal street or appurtenances to an internal street at the time of development of the subdivision, the City may require the developer to pay into escrow, in accordance with Section 5.04, funds for the future construction of the street or its appurtenances as a condition of Final Plat approval for the development.

(5) Impact Fees. All fees due on the project shall be paid in accordance with the City's Impact Fee Ordinance and/or Development Agreement.

(b) Street Design and Appurtenances.

(1) Application of Requirements. Street design requirements are subject to the provisions included in the *Engineering Standards*, and Planned Development Ordinance (if applicable to the subject property) as well as the regulations contained within this Subdivision Ordinance.

(2) Conformity to the Comprehensive Plan. The general location of streets shall conform to the Comprehensive Plan. For streets that are not shown on the Comprehensive Plan, such as local residential streets, the arrangement of such streets shall:

a. Provide for the continuation or appropriate projection of existing streets or street stubs from or into surrounding areas – refer to street stub requirements outlined in Section 8.04(b)(9) and connectivity requirements in Section 8.04(b)(10);

b. Conform to any plan for the neighborhood approved or adopted by the City to address a particular situation where topographical or other conditions make continuance or conformity to existing streets impractical; and

c. Not conflict with existing or proposed streets or driveway openings, including those on the opposite side of an existing or planned thoroughfare, as described within the *Engineering Standards*. New streets shall align with opposite streets and driveway openings such that median openings can be shared.

(3) Relation to Adjoining Street System. The proposed street system shall extend all existing major streets and such existing secondary and local streets as may be necessary for convenience of traffic circulation and emergency ingress and egress.

(4) Street Widths & Rights-of-Way. Street(s) widths and related rights-of-way shall be designed in accordance with the City's:

a. *Comprehensive Plan*;

b. *Engineering Standards*; and

c. Planned Development Ordinance (if applicable to the subject property).

All streets shall be paved with a permanent type of pavement in accordance with the *Engineering Standards*.

(5) Street Names, Street Name Signs, and Traffic Control Signs.

a. Street Names. New streets shall be named so as to provide name continuity with existing streets, and so as to prevent conflict or "sound-alike" confusion with similar street names. All street names shall be approved by the Director of Development Services prior to any Plat approval, and prior to approval of the Construction Plans.

b. Cost of Signs. The cost of street name signs and traffic control signs shall be paid for, and the signs shall be installed, by the developer.

c. City Standards. All street name signs and traffic control signs shall conform to the City's details for street name sign design and the latest edition of the Texas "Manual of Uniform Traffic Control Devices".

(6) Traffic Studies. The Director of Engineering Services may require a Traffic Impact Analysis (TIA) or other type of engineering study from the developer prior to any approval for plats or construction plans for technical data pertaining to the potential traffic impact of the proposed development on the City's street system.

(7) Street Lengths.

a. See the *Engineering Standards* for street length design requirements.

b. A Preliminary Plat or Final Plat approved prior to the effective date of this Subdivision Ordinance shall be exempted from the street length requirement. However, the City may consider, and shall be authorized to enforce, application of these requirements if major changes to the approved Preliminary Plat or Final Plat are sought by the applicant. Major changes include, but are not limited to:

1. Rerouting of streets; or
2. Increasing the lot count by five percent (5%) or more from the previously approved Preliminary Plat or Final Plat.

(8) Stub Streets.

a. See the *Engineering Standards* for the design requirements.

b. Connections are required to adjacent vacant properties at locations as approved by the Director of Development Services.

c. A note shall be clearly placed on the Final Plat indicating that the stub street will be extended with future development (see requirements for temporary turn-arounds in the *Engineering Standards*).

d. All stub streets shall have a sign prominently posted at the terminus of the street to indicate that the street will be extended in the future.

1. The sign shall comply with standards established by the Director of Engineering Services,

2. Installation and cost of the sign shall be the responsibility of the developer.

(9) Street Connectivity.

a. New developments shall provide street connections to adjacent developments, as determined by the Director of Development Services, allowing access between developments for neighborhood traffic and to enhance pedestrian and bicycle connectivity as recommended in the Comprehensive Plan.

b. The use of cul-de-sac streets shall be limited within new developments to the greatest extent possible. The Fire Chief and the Director of Development Services shall have the authority to determine whether or not the use of cul-de-sacs in a development meets the intent of this Section during City review and consideration of the Preliminary Plat.

(10) Street Lighting. Street lighting shall be provided along all streets and thoroughfares in accordance with the *Engineering Standards*. The Director of Engineering Services shall be the responsible official for decisions related to street lighting, and may authorize a Minor Waiver, in accordance with Section 9.01, for a street lighting requirement if such Waiver will not compromise public health, safety, security and convenience.

(c) Private Streets.

(1) Private Streets. Private streets within the City and/or the ETJ may be allowed in accordance with the Zoning Ordinance. Private streets within the City's ETJ require Commission action and approval. Private streets shall be designed and constructed to the City's standards for public streets, in accordance with the *Engineering Standards*.

(2) City Council Action Required. Dedicated streets and rights-of-way shall not be designated or used as private streets and such use is prohibited, except where specific approval is given by action of the City Council for properties within the City's extraterritorial jurisdiction and upon approval of a Specific Use Permit for properties within the City limits. The City Council may add any conditions as deemed appropriate as part of the approval of a Private Street Development.

(3) Conversion of Private Streets to Public. The City may, but is in no way obligated to, accept private streets for public access and maintenance. Requests to convert Private Streets to Public Streets shall be subject to the following provisions:

a. The homeowners' association (HOA) shall submit a petition signed by at least sixty-seven percent (67%) of its members/lot owners (or a greater number of signatures, if required by the HOA documents or Declaration).

b. All of the infrastructure shall be in a condition that is acceptable to the Director of Engineering Services and the Director of Public Works.

c. All security stations and other structures not consistent with a public street development shall be removed by the HOA, at its cost, prior to acceptance of the streets and appurtenances by the City.

d. All monies in the reserve fund for private street maintenance shall be delivered to the City. Money in the reserve fund in excess of what is needed to bring the streets and appurtenances up to City standards will be refunded to the HOA. Private Street developments that exist as of the adoption of this ordinance are not required to deliver a reserve fund balance to the City.

e. The HOA shall prepare and submit a replat to Development Services for review. Upon approval, the HOA shall file the replat to dedicate the streets and appurtenances to the City.

f. The HOA shall modify and re-file, at its cost, the HOA documents to remove requirements specific to Private Street developments. The City Attorney shall review the modified HOA documents prior to their filing. The HOA shall be responsible for the cost of review by the City Attorney.

(4) HOA Requirements. Private Street developments and the related HOA shall meet all requirements of Section 8.11 of this Ordinance.

SECTION 8.05 ALLEYS

(a) **Alleys Required.** Alleys shall be provided to serve all single-family and two-family residential lots. Alleys shall be constructed according to design criteria in the *Engineering Standards*. The Director of Engineering Services and Director of Development Services may authorize a Minor Waiver, in accordance with Section 9.01, to the requirement for alleys if all of the following conditions are met:

(1) Sufficient on- and off-street parking is provided for each lot in the development;

(2) No lot-to-lot surface storm drainage will occur within the development;

(3) The subdivision design allows for an efficient solid waste collection pattern; and

(4) Adequate area is dedicated for storm drainage facilities and utilities.

(b) **Dead End Alleys.** Permanent dead end and "hammerhead" alleys are prohibited. All alleys shall have adequate turnouts and street entrances such that vehicular traffic flow is continuous and efficient. Where a temporary dead end alley situation is unavoidable (such as due to project phasing), a temporary turn-around bulb or turnout onto a street, either of which will require a temporary alley easement, shall be acquired and shown on the Preliminary and Final Plats. Alleys in new subdivisions shall connect to and/or be aligned with alleys in adjacent subdivisions.

SECTION 8.06 THOROUGHFARE SCREENING

(a) **Required Screening.** Screening is required for all single-family detached, two-family, and townhome lots and subdivisions as follows:

(1) Back of Lots. The rear of all lots that back to a Type D or higher class Thoroughfare;

(2) Side of Lots. The side of all lots that side to a Type D or higher class Thoroughfare, unless a lot sides to a median-divided entry street into a subdivision; and

(3) Between Streets/Alleys. Between any street and an adjoining parallel alley.

(b) **Screening Plan.**

(1) Preliminary Screening Plan. A Preliminary Screening Plan shall be submitted for review and approval with the Preliminary Plat.

(2) Final Screening Plan. A Final Screening Plan, including entry features and showing all elevations and materials, shall be submitted with the Construction Plans. The Screening Plan shall be reviewed and considered for approval by the Director of Development Services prior to approval of the Construction Plans, and prior to scheduling a Pre-Construction Meeting (refer to Section 5.02).

(3) Engineering Standards. Screening walls and fences shall be designed in accordance with the City's *Engineering Standards*. Structural elements shall be sealed by a licensed professional engineer and approved by the City.

(4) Timing of Installation and Inspection. Upon installation of the required screening, the developer shall contact the City's Landscape Architect and the Director of Engineering Services to request final inspections of screening elements. All required screening shall be installed prior to City issuance of a Letter of Final Acceptance (see Section 5.05) unless delayed in accordance with Section 8.06(b)(5).

(5) Surety Provided for Delay. The developer may delay the installation of screening by providing surety to guarantee the installation of required screening. Such surety shall be in an amount and format that is approved by the Director of Development Services and by the Director of Engineering Services. Required screening shall be installed within six (6) months following the date of issuance of the Letter of Final Acceptance (refer to Section 5.05).

(c) Landscape Plan.

(1) Landscape Plan. A Landscape Plan for landscaping that will be installed for the development, including landscaping for common and amenity areas, entryways and thoroughfare screening, shall be submitted with the Construction Plans and shall be approved by the Director of Development Services prior to approval of the Construction Plans and prior to scheduling a Pre-Construction Meeting (refer to Section 5.02).

(2) Standards. Landscape materials and installation shall be in accordance with Landscape Requirements in the Zoning Ordinance.

(3) Timing of Installation and Inspection. Upon installation of all landscaping, including that required for thoroughfare screening, the developer shall request a final inspection of landscaping elements by the Director of Development Services. All required landscaping shall be installed prior to the City's issuance of a Letter of Final Acceptance (see Section 5.05) and Certificates of Occupancy for homes, excluding model homes which may be released early.

(4) Surety Provided for Delay. The developer may delay the installation of landscaping by providing surety to guarantee the installation of required landscaping. Such surety shall be in an amount and format that is approved by the Director of Development Services and by the Director of Engineering Services. Required landscaping shall be installed within six (6) months following the date of issuance of the Letter of Final Acceptance (refer to Section 5.05).

(d) Screening & Landscaping Options. Screening required by Section 8.06(a) shall be installed by the developer in accordance with the approved Screening and Landscaping Plan(s), as applicable. The design of such screening shall conform with one of the options shown in Table 8.06-1 and Diagrams 8.06-1, 8.06-2(a), 8.06-2(b), 8.06-2(c), 8.06-3, 8.06-4(a) and 8.06-4(b).

(1) Landscape Edge. All landscape edges provided for required screening shall be located within a private "non-buildable" lot (shown on the Preliminary and Final Plats) that is dedicated to, owned by, and maintained by the subdivision's Homeowners' Association (HOA). Required landscape edges shall be exclusive of all required street and right-turn rights-of-way, drainage easements, and utility easements.

(2) Screening Walls & Fences. All required screening walls and fences shall be:

a. Located entirely within the required landscape edge (except for at cul-de-sac bulbs, Option 4, where the required ornamental fence shall be located entirely upon the cul-de-sac lots abutting the adjacent street);

b. Subject to the approval of the Director of Development Services;

c. Of the minimum (and maximum) heights as shown in Table 8.06-1;

d. Maintained by the HOA (or by the private lot owners if the HOA is dissolved in the future);

e. The minimum height of required walls and fences shall be measured from the nearest alley edge, rear lot property line (where no alley exists), or street-side sidewalk grade, whichever is higher. The maximum height of columns, including capstones, shall be nine feet (9');

f. Any area between alley paving and a screening wall or fence shall be paved with concrete unless otherwise approved by the Director of Engineering Services; and

g. A minimum five-foot (5') wide wall maintenance easement, dedicated to the HOA, shall be provided on all lots abutting the required screening along the full length of the required screening wall or fence, unless separated by an alley. Such easement shall be shown on the Preliminary and Final Plats.

(3) Trees and Shrub Screens. All required screening trees and shrubs shall be planted within the landscape edge (except for as provided for cul-de-sac bulbs, Option 4). All trees and other landscape materials required for screening shall be of evergreen drought-tolerant species selected from the City's Approved Plant List in the Zoning Ordinance, and shall be subject to approval by the Director of Development Services. Minimum tree size shall be at least three caliper inches (3"), and a single species of tree shall not exceed forty-five percent (45%) of the plantings for all screening options. All trees shall be planted a minimum of four feet (4') from easements, curbs, utility lines, screening walls, fences, sidewalks and alleys, as determined by the Director of Development Services.

a. *Solid Shrub Screens.* For solid shrub screens, evergreen shrubs from the City's Approved Plant List (in the Zoning Ordinance) shall be used that are low-maintenance, drought-tolerant, and insect- and disease-resistant. Shrubs shall be spaced such that they will provide a solid minimum six-foot (6') tall screen upon planting.

(4) Cul-De-Sac Bulbs. For all cul-de-sac bulbs that abut, or "open", onto an adjacent street (Option 4), the following additional screening standards shall apply:

a. All required trees and other landscape materials shall be located within the side yards of the cul-de-sac lots abutting the adjacent street unless a landscape edge, dedicated to and maintained by the HOA, is provided.

b. Trees required for screening do not count toward the number of trees required for residential lots in the Zoning Ordinance.

c. A minimum ten foot (10') separation, or the required landscape edge width, whichever is greater, shall be provided between the right-of-way for the cul-de-sac

and the right-of-way for the adjacent street. A sidewalk shall be provided to connect the sidewalk along the adjacent street to the sidewalk along the cul-de-sac within a twenty foot (20') pedestrian access easement.

(5) Berms. Berms may be used in conjunction with any screening option, subject to approval by the Director of Engineering Services and Director of Development Services. Berms shall be placed within the landscape edge on private property (i.e., not within public right-of-way), shall not exceed a three-to-one (3:1) slope, and shall be designed such that they do not hinder maintenance, storm drainage, accessibility or visibility. Topographic information for berms shall be shown on the Landscape Plan and on the Grading and Drainage Plans for the development.

(e) Wall Elevations & Living Screens.

(1) If the top-of-wall elevation for a required screening wall is less than six feet (6'), as measured in accordance with Section 8.06(d)(2)e, a solid, irrigated living screen shall be used in combination with the screening wall to provide the necessary screening at the appropriate height from grade.

(2) An irrigated living screen consisting of large trees and additional large evergreen shrubs that are appropriate for screening purposes (selected from the City's Approved Plant List in the Zoning Ordinance) shall be planted within the landscape edge where the height deficiency occurs.

(3) The species, sizes, spacing and arrangement of all trees and shrubs that are required for screening shall be subject to the discretion and approval of the City's Landscape Architect and the Director of Development Services. All plant materials used for living screens shall be insect- and disease-resistant, and shall be plant species that are well freeze-hardy, low maintenance, well-adapted to the north central Texas area, and drought-tolerant such that they are self-sustaining with minimal irrigation and care.

(4) When an irrigated living screen is utilized, the Landscape Plan (Section 8.06(c)) shall demonstrate adequate visual screening at the heights required and within required time frames, and such living screen shall be subject to the approval of the Director of Development Services.

(5) Tree and living screen requirements on sites with topography changes are subject to the approval of the City's Landscape Architect and the Director of Development Services.

(f) Irrigation Requirements. An automatic, underground irrigation system shall provide one hundred percent (100%) coverage for all living screens and plantings, and shall conform with the following:

(1) Line Placement. Irrigation lines shall be placed a minimum of two and one-half (2½) feet from the sidewalk. Reduction of this requirement is subject to review and approval by the Director of Development Services. The main irrigation lines, section lines and zone valves for irrigation systems shall be placed outside of required right-of-way corner clips.

(2) Type of Irrigation. Trees and shrubs shall be irrigated by deep-watering bubbler irrigation lines only on a separate line or zone (for targeted irrigation during periods of drought). Other landscaping may be irrigated per the irrigation standards in the Zoning Ordinance.

Separate valves shall be provided to turn off all or some irrigation lines/zones during periods of drought, water conservation or freezing weather temperatures.

(3) Detectors. Evapotranspiration (ET) controllers are required on all irrigation systems.

(4) Water Meter. The developer is responsible for installing irrigation water meter(s). The Director of Engineering Services shall approve all water meter sizes and placement. All water meters shall be easily accessible from the street.

(g) HOA Responsibilities. All developments that have thoroughfare screening, entry features or common amenity areas shall be required to have a mandatory HOA to own and maintain such features (see Section 8.11). If an HOA fails to maintain any required screening device, the Director of Public Works and/or the Director of Development Services, at their discretion, shall have the authority to cause the removal and/or replacement of such required screening at the expense of the HOA.

SECTION 8.07 SIDEWALKS

(a) Sidewalks (and any necessary sidewalk easements on private property) shall be provided according to the standards in the *Engineering Standards*.

SECTION 8.08 DRIVEWAYS, FIRE LANES AND ACCESS EASEMENTS

(a) Standard Requirements. All driveway approaches, curbs, gutters, pavements and appurtenances necessary to provide access to properties shall be provided by the developer, shall be designed, constructed and maintained in accordance with standards in the City's *Engineering Standards*, Zoning Ordinance, and Planned Development Ordinance (if applicable to the subject property), and shall be subject to approval by the Director of Engineering Services.

(b) Fire Lanes. Fire lanes are to be designed in accordance with the City's adopted Fire Code and *Engineering Standards*. Fire lane easements shall be shown on the Preliminary Site Plan (see Zoning Ordinance) and on the Final Plat, and shall be maintained to the City's standards by the property owner. For safety and emergency accessibility reasons during construction, developments other than single-family detached or two-family residential subdivisions shall not be allowed to proceed with vertical structural construction above the foundation prior to:

(1) Completion and City inspection of all fire lanes and fire hydrants on the site (unless otherwise approved by the Fire Chief); and

(2) Issuance of a Building Permit for the structure.

(c) Access Easements. Access easements shall be provided as directed by the Director of Engineering Services and Director of Development Services.

SECTION 8.09 EASEMENTS, LOT & BLOCK DESIGN, MONUMENTS, SUBDIVISION NAMES, FRANCHISE UTILITIES

(a) Easements.

(1) The type, size and location of easements shall be determined by the Director of Engineering Services. All existing and proposed easements shall be shown on the Preliminary and Final Plats. All easements shall be labeled on the Final Plat and dedicated for the specific purpose intended (e.g., "City Utility Easement", "City Drainage Easement", "CoServ Electric Easement", etc.).

(2) Off-site easements that are necessary to fulfill City requirements or are required by the City shall be dedicated to the City by separate instrument (unless the abutting property is platted) and shall be approved by the Director of Engineering Services. If the abutting property is platted, then a Replat of that property shall be required to establish the off-site easement.

(b) Zoning Compliance. All lots shall conform with the zoning district requirements, unless located in the ETJ in which they shall comply with the agreements between the City and the Counties.

(c) Residential Lots Adjacent to Drainage Areas. Lots shall be exclusive of any portion of a natural drainage area (i.e., Major Creek, stream, tributary, etc.), maintenance access, and/or erosion hazard setback (see Major Creek Ordinance). Retaining walls may be allowed on lots adjacent to natural drainage areas as approved by the Director of Engineering Services.

(d) Lot Shape. The City reserves the right to disapprove any lot which, in its opinion, will not be suitable or desirable for the purpose intended, or which is so oddly shaped as to create a hindrance to the logical lot layout of surrounding properties and/or create an irregular building envelope. The following requirements shall also apply.

(1) Lots shall be generally rectangular in shape. Sharp angles between lot lines shall be avoided. Flag lots are prohibited (See Diagram 8.09-1).

(2) Irregularly shaped lots shall have sufficient width at the building line to meet minimum lot width and frontage requirements for the appropriate zoning district (if applicable), and shall provide the minimum building pad required by zoning without encroachment into front, side or rear yard setbacks or into any type of easement (See Diagram 8.09-2).

(e) Lot Lines, Buildability.

(1) Side Lot Lines. Side lot lines shall be at ninety degree (90°) angles or radial to street right-of-way lines to the greatest extent possible (See Diagrams 8.09-3 and 8.09-4). The Director of Development Services may grant a Minor Waiver, in accordance with Section 9.01, if unusual circumstances exist on the subject property or on adjacent property that make it difficult to comply with this requirement.

(2) Lot Lines and Jurisdictional Boundaries. All lot lines shall, to the greatest extent possible, align along county, school district, and other jurisdictional boundary lines such that lots are

fully within one county, school district, or other jurisdiction. The Director of Development Services may grant a Minor Waiver, in accordance with Section 9.01, to this requirement if a county, school district or other jurisdictional boundary line will bisect a lot, provided that the entire residential dwelling or main structure is constructed entirely within one county, school district or other jurisdiction (i.e., the structure does not "straddle" school district or jurisdictional boundary line).

(3) Lot Buildability. Any portion of a lot that is non-buildable for any reason shall be clearly shown as such on the Preliminary and Final Plats. A "Lot Buildability" detail shall be submitted along with the Preliminary and Final Plats, and shall verify that the buildable portion of such a lot can accommodate a dwelling or main structure that complies with applicable City zoning regulations (if located within the City's limits) and building codes.

(f) Lot Orientation Restrictions.

(1) Type A and Type B Thoroughfares. No single-family, two-family, or townhome lot(s) shall front onto or have a driveway onto Type A and Type B thoroughfares, as described within the *Engineering Standards*.

(2) Type E, F or G Thoroughfares. Lots are prohibited from backing to Type E, F or G thoroughfares, as described within the *Engineering Standards*.

(g) Lot Frontages.

(1) Street Frontage.

a. *Adequate Frontage.* Each lot shall have adequate access to a street (or an approved public way) by having frontage on such a street that is not less than forty feet (40') at the street right-of-way line (See Diagram 8.09-3), or as otherwise specified in the Zoning Ordinance or a Planned Development (PD) Ordinance, if applicable. Lots fronting onto an eyebrow or bulb portion of a cul-de-sac shall also have a minimum frontage of forty feet (40') at the street right-of-way line (See Diagram 8.09-4).

b. *Frontage Exception.* For non-residential developments ten (10) acres or greater, the lots may be platted to a public way instead of a dedicated street upon approval by the Director of Development Services

(2) Double Frontage.

a. *Single-Family, Two-Family and Townhome Lot(s).* Double frontage lots are prohibited, except that single-family, two-family or townhome lots may back or side onto a Type D or larger thoroughfare, as described within the *Engineering Standards*, with appropriate screening (see Section 8.06). Where lots back or side onto a Type D or larger thoroughfare, no driveway access is allowed onto the thoroughfare from the rear or side of the lot.

b. *Multi-Family and Non-Residential Lots.* Where lots have frontage on more than one street, a front building line shall be established for each street.

(3) Lots Facing Other Lots. Whenever feasible, each residential lot shall face the front of a similar lot, or shall face a park or open space if one exists or is planned (see Section 8.09(h)), across the street. In general, an arrangement placing adjacent lots at right angles

to each other should be avoided. The Director of Development Services may grant a Minor Waiver, in accordance with Section 9.01, if unusual circumstances exist on the subject property or on adjacent property that make it difficult to comply with this requirement.

(h) Lots in Relation to Parks/Open Space. All lots that are located directly across a street from a park/open space shall face onto the park/open space. Also refer to Section 8.12(b) of this Ordinance.

(i) Large Lots and Tracts. If the lots or tracts of land in a proposed development are large enough to suggest possible further subdivision in the future, or if portions of the property are not subdivided or developed immediately, then the Preliminary Plat shall show how such large tracts or remainder portions of the property can be subdivided into conforming lots at a later time, and shall also show how streets can be extended and how median openings can be aligned and shared in the future.

(j) Lot & Block Numbering. All lots within each phase of a development are to be numbered consecutively within each block. Each block shall have an alpha or numeric, designation (e.g., "Block A", "Block 6", etc.).

(k) Building Lines. Building lines along all streets shall be shown on the Preliminary and Final Plats on lots and shall conform with the minimum setbacks for front, side and rear yards as required by the Zoning Ordinance (if within the City's limits) on the basis of the respective districts (i.e., single-family, two-family/duplex, multi-family, commercial, retail office, mobile home, industrial, etc.).

(l) Block Requirements. See the *Engineering Standards*.

(m) Monuments.

(1) General Placement. Monuments consisting of minimum three-eighths inch (3/8") diameter steel rods, at least twenty-four inches (24") long, shall be placed at all:

a. Lot and block corners (wherever a lot line bearing changes);

b. Intersection points of alley and block lines; and

c. Curve and tangent points along block, lot and right-of-way lines within the subdivision.

(2) Subdivision Monumentation. At least two (2) property corners shall be marked with monuments of three dimensional coordinates established from the City's Monumentation System and using the City's Combined Scale Factor, as necessary. The corners so marked should be at opposing ends of the property unless otherwise approved by the Director of Engineering Services.

(n) Subdivision Names. New subdivisions shall be named so as to prevent conflict or "sound-alike" confusion with the names of other subdivisions. Subdivisions with similar names (e.g., Stonebriar Park Estates and Stonebriar Highlands) shall be located in proximity to each other, not in different areas of the City. A Minor Waiver, in accordance with Section 9.01, may be approved by the Director of Development Services upon a finding that the proposed subdivision name will not cause confusion, especially for emergency responders.

(o) Franchise Utility Policy.

(1) General Requirements. The Director of Engineering Services may require easements for poles, wires, conduits, gas, telephone, cable TV or other utility lines if necessary or advisable in the opinion of the Director of Engineering Services.

(2) Locations. Utility easements may be located as follows.

a. Utilities shall be located in the alley rights-of-way along the rear property lines of lots or tracts whenever an alley is provided.

b. Utilities shall be located in easements provided adjacent to the street rights-of-way along the front of lots or tracts whenever an alley is not provided.

(3) Ground-Mounted Equipment. Ground-mounted equipment shall not be placed in visibility, access or maintenance easements.

a. All ground-mounted equipment within view of a public street right-of-way shall be screened from the adjacent street by minimum five (5) gallon evergreen shrubs, or larger, on three-foot (3') centers on the side facing the right-of-way, as well as along both sides of the equipment such that it will be fully screened from view from the street.

b. Planting materials selected shall be materials that will grow at least to the height of the equipment height, and will provide a continuous and mostly solid/opaque living screen, within two (2) growing seasons from the date planted. The planting material must be selected from the list of materials set forth in the City's Zoning Ordinance.

c. The proposed planting shall be included on the Landscape Plan as required in Section 8.06(c) of this Ordinance.

d. Public-owned ground-mounted equipment (such as City traffic controller boxes, etc.) shall be exempt from the screening requirements in this Section.

SECTION 8.10 SUBDIVISION AMENITIES

(a) Description & Definition. The term "amenity" is described within Section 8.11(c)(1) and defined within Section 10.02 of this Ordinance.

(b) Requirements. Where amenities are proposed in conjunction with a development, such amenities shall be reviewed and approved in accordance with the following:

(1) Preliminary plans and illustrations, along with a written statement of such concepts, shall be submitted for review and approval with the Preliminary Plat.

(2) Plans for amenities shall then be incorporated into the Screening Plan and/or Landscape Plan (refer to Sections 8.06(b) and 8.06(c) of this Ordinance, respectively), as appropriate, for submittal as part of the Construction Plans (see Section 5.01 of this Ordinance).

(3) Structural elements shall be sealed by a licensed professional engineer and shall be considered for approval by the City.

(4) A Site Plan, reviewed and approved in accordance with the Zoning Ordinance, is required for private recreational facilities and parks;

(5) City review and approval of plans for amenities shall be required prior to issuance of a Letter of Final Acceptance for the subdivision improvements (refer to Section 5.05).

(c) Design of Amenities. The design of amenities shall conform to the following:

(1) Entry features shall be constructed entirely on privately owned property (i.e., not within public right-of-way), and shall not suspend over a public right-of-way, unless otherwise approved by the Director of Public Works and the Fire Chief. Minor elements of an entry feature may be placed within an entry street median upon Commission approval, provided that such street median is platted as a non-buildable lot and dedicated to a mandatory HOA for private ownership and maintenance. An entry feature having a water pond, fountain or other water feature shall only be allowed if approved by the Director of Engineering Services and the Fire Chief.

(2) No entry feature, other than screening walls or extensions of screening walls, may be constructed on any portion of a single-family, two-family, or townhome lot(s). All such features shall be constructed on lots that are platted as "non-buildable" lots and dedicated to a mandatory HOA for private ownership and maintenance.

(3) Entry features shall not encroach into visibility easements or otherwise impair pedestrian or vehicular visibility.

(4) The maximum height for entry features and structures shall be the maximum height of the governing zoning district, if applicable, as measured from the nearest street or sidewalk grade, whichever is higher.

(5) Private recreation facilities, if provided in a development, shall, to the greatest extent possible, be centrally located within the overall development. (See Diagram 8.10-1)

SECTION 8.11 HOMEOWNERS' ASSOCIATION (HOA) REQUIREMENTS

(a) Purpose. The purpose for the establishment of an HOA (also referred to as "Association") for residential developments is to create an organization that owns and is responsible for maintaining, among other things, commonly owned properties, amenities, rights-of-way and riparian areas for the communal good of the development's property owners and residents.

(b) Applicability. An HOA shall be established for any development that contains any of the following: an amenity, private street(s), a Major Creek or tributary, or thoroughfare screening. For purposes of this section, the terms "Homeowners' Association" and "Association" are interchangeable with the term "Property Owners' Association" for multi-family and non-residential developments.

(c) Descriptions of Elements Requiring a HOA. Any one (1) or more of the following elements created as part of a development shall require formation and continued operation of a mandatory HOA:

(1) Amenity. Where proposed in conjunction with a development, the word "amenity" shall be as defined in Section 10.02, and shall include, but not be limited to, the following:

a. Amenity center (i.e., private swimming pool, club house, tennis courts, etc.);
b. Private recreational facility;
c. Entry features;
d. Open space - voluntary or as required by zoning or Development Agreement;
e. Ponds;
f. Water fountains;
g. Water features;
h. Hike-and-bike trails; and
i. Other commonly owned facilities.

(2) Major Creek. As defined in Section 10.02, and as generally regulated by Section 8.03 of this Ordinance.

(3) Private Street. As defined in Section 10.02, and as generally regulated by Section 8.04(b)(5) of this Ordinance; this shall include all infrastructure including streets, alleys, sidewalks and other appurtenances within designated access easements, as well as associated structures as follows:

a. Security station structures and equipment (including gates, access card readers, perimeter security fencing, etc.);
b. Greenbelts; and
c. Other infrastructure necessary for vehicular circulation and neighborhood security.

(4) Thoroughfare Screening. As defined in Section 10.02, and as generally regulated by Section 8.06 of this Ordinance.

(d) **Procedure.** The establishment of a required HOA shall occur in conjunction with the recordation of the subdivision Final Plat, and shall generally be established as follows:

(1) Documents Submitted for Review. The Declaration, covenants and other necessary documents establishing the HOA shall be submitted to the City for review by the City Attorney for conformance with this and other applicable ordinances prior to submission of the Final Plat, and prior to issuance of a Letter of Final Acceptance for the development (refer to Section 5.05). HOA documents shall include descriptions of any amenities, private streets, stub streets, thoroughfare screening, Major Creek(s) or tributary(ies), and other areas for which the Association is responsible for maintenance, and shall outline the organization of the Association.

(2) Approval By City Attorney. All HOA documents shall be reviewed by the City Attorney prior to recordation of the Final Plat. The applicant shall reimburse the City for all related legal costs for review of the HOA documents. This reimbursement shall be paid in full prior to recordation of the Final Plat.

(3) Recordation. All HOA documents shall be recorded at the County prior to the recordation of the Final Plat. Two (2) copies of the recorded documents shall be submitted to Development Services for distribution to the Planning Division for City records within five (5) days following recordation.

(4) Additional Phases. An additional phase to an existing subdivision is not required to establish a separate and distinct HOA, provided that:

a. The existing, recorded Association documents are amended to incorporate the area of the new subdivision phase and to adopt the responsibility of its amenities, private streets, Major Creeks and tributaries, thoroughfare screening, and other areas for which the Association is responsible for maintenance.

b. The applicant shall provide a draft of the amended covenants to the City Attorney for review prior to the recordation of the plat.

(e) Notice to Purchasers. The developer shall be required to post notice in a prominent place at all model homes and sales offices stating the following:

(1) That an HOA has been established for the subdivision;

(2) That membership in the HOA is mandatory for all lot owners; and

(3) That the developer is required to provide to any person, upon their request, a complete copy of the Association documents and a five (5)-year projection (at a minimum), of Association dues, income and expenses.

(f) General Requirements. The following shall be set forth in the HOA documents:

(1) A statement that membership in the Association is mandatory for all owners of property within the subdivision;

(2) A listing of all required maintenance responsibilities, and where possible, the lot number(s), legal descriptions, street name(s), etc. as shown on the approved plat for areas to be the responsibility of the Association;

(3) By-laws related to the governance of the Association;

(4) Covenants for maintenance assessments, which shall run with the land;

(5) Responsibility for liability insurance and local taxes;

(6) Statement that the authority for enforcement of Association rules and regulations is solely the responsibility of the Association and is not, in any way, the responsibility of the City;

(7) Authority for the Association to secure funds from its members sufficient to meet its responsibilities. This authority shall include the ability to collect dues, to increase dues, to charge special assessments, and to place liens against property for failing to pay dues and assessments.

a. Dues shall be calculated based on a cost projection for the maintenance of all amenities and based on eventual build-out of the subdivision;

b. Dues shall not be based on calculations which include monies from the developer which will not be provided following the transfer of the Association from the developer to the lot owners.

c. Dues shall be required to be disclosed to all lot owners at the time of property purchase by the lot owners.

(8) Provision that no amendment of the Association documents relating to maintenance of amenities, private streets, Major Creeks and tributaries, thoroughfare screening, any other Association-maintained area or facility, or related reserve funds (as applicable) shall occur without prior City approval;

(9) Written release of liability for maintenance to benefit the City; written indemnification of the City outlining that under no circumstances shall the City be liable to the Association or any property owner or their respective heirs, executors, administrators, devisees, personal representatives, successors or assigns for any damages, injuries (including death), and/or liability resulting from any amenity, on the private streets, within or adjacent to any Major Creek or tributary, associated with any thoroughfare screening or common landscaping, or from any other Association-owned and maintained area or facility;

(10) Written assurance of funds based on an accredited cost projection analysis within a specific reserve account of the Association for the maintenance and removal of amenities as determined by the City; and

(11) Written consent giving the City the authority to take the actions for violations as set forth in Section 8.11(h).

(12) Other City requirements as applicable.

(g) Supplementary Requirements. The HOA shall also comply with the following regulations, where applicable:

(1) Association documents shall not overrule the landscaping or other provisions of the Zoning Ordinance by penalizing or restricting water conserving landscapes, or by requiring landscape materials that do not comply with Zoning Ordinance landscape requirements;

(2) Amenities. The following regulations shall apply to any subdivision that includes an amenity, as described in Section 8.11(c)(1) (and defined in Section 10.02):

a. Where amenities are proposed in conjunction with a development, the applicant shall comply with those regulations outlined in Section 8.10 of this Ordinance.

b. All developments that require the provision of common open space shall submit covenants to maintain open space, recreational areas, and other commonly owned facilities for review with the Final Plat application.

(3) Private Streets. Whenever a public street becomes private following recordation, an HOA is required to be established, if not already in existence, that would be responsible for owning and maintaining the converted streets and rights-of-way. The following regulations shall apply to any subdivision that includes private streets, except those that exist as of the effective date of this Ordinance.

a. The Association shall own and be responsible for the maintenance of private streets and appurtenances (such as alleys, storm sewers, sidewalks, barrier-free ramps, street lights and signs, etc.) and shall provide for the payment of dues and assessments required to maintain the private streets and appurtenances.

b. The Association documents shall state that if the specific approval or the Specific Use Permit for the Private Street Development is revoked or the private streets are

otherwise converted to public streets, the reserve fund shall become the property of the City (see the City's *Engineering Standards* for conversion process).

c. In addition to any other requirements set forth in this Section, the HOA's documents shall specify the following:
    1. That the streets within the development are private, that they are owned and maintained by the Association, and that the City has no obligation to maintain, repair or reconstruct the private streets.
    2. A statement that the City may, but is not obligated to, inspect private streets and require repairs necessary to insure that the same are maintained to City standards.
    3. A statement that the Association may not be dissolved without the prior written consent of the City Council, which consent shall not be withheld by the City if it determines that an adequate reserve fund exists, and the streets and alleys are in satisfactory condition as determined by the Director of Public Works.
    4. That failure to bring the subdivision into compliance with the regulations may cause the City to revoke the specific approval or the Specific Use Permit for the Private Street Development and take appropriate action.

d. The HOA's documents shall note that certain City services may not be provided in Private Street Developments. The services that may not be provided include, but are not limited to: police enforcement of traffic and parking ordinances and preparation of accident reports. Depending on the characteristics of the proposed development other services may not be provided.

e. The HOA's documents shall contain a provision that requires the Association to provide unrestricted access to emergency vehicles, utility personnel, the U.S. Postal Service, and governmental employees, agents or representatives in the performance of their official duties. All access gates shall be designed and constructed in accordance with emergency access design standards in the *Engineering Standards*, and shall be equipped with an Opticom gate opening system or with another opening system that is acceptable to the Fire Chief.

(4) <u>Major Creeks, Tributaries, Ponds and Water Features (100-Year Floodplain)</u>. For single-family and two-family residential developments, the 100-year floodplain may be owned and maintained by a Homeowners' Association subject to City approval. The Final Plat shall reflect, and the Association's documents shall provide:

a. City access for emergency vehicles, equipment and personnel and for the improvement and maintenance of the 100-year floodplain in the event they are not being properly maintained, as determined by the Director of Engineering Services; and

b. That the Association shall reimburse the City for all costs incurred by the City for maintenance.

(5) Thoroughfare Screening. All subdivisions that are required to provide thoroughfare screening per Section 8.06 of this Ordinance shall comply with the following:

a. The Homeowners' Association shall own and be responsible for the maintenance of all required screening walls and fences, landscaping, landscape edges, and landscape irrigation systems, and shall provide for the payment of dues and assessments required to maintain such improvements.

b. The Association documents shall state that the City has no obligation to maintain or reconstruct the screening walls and fences, landscaping, landscape edges, and landscape irrigation systems in the event of damage to such improvements.

c. The Association documents shall state that the City may, but is not obligated to, inspect screening walls and fences, landscaping, landscape edges, and landscape irrigation systems, and that the City may require maintenance and repairs necessary to ensure that such improvements are maintained to City standards.

(h) Violations, Revocations & Liens.

(1) The City will notify the Homeowners' Association of violations of any of the regulations specified within this Section.

(2) Failure to bring the subdivision into compliance with these regulations may cause the City to revoke the specific approval of the Association or take other remedies as outlined in this Section 8.11(h).

(3) The City shall have all lien, assessment and enforcement rights granted therein to the Association, and the City shall have the ability to enforce the liens and assessments, and avail itself of any other enforcement actions available to the City pursuant to State law and/or City regulations.

(4) Should the Association fail to carry out its duties as specified in this Ordinance, the City shall have the right and ability, after due notice to the Association, to perform the duties required by this or any other Ordinance, regulation or agreement with the City in order to bring the Association into compliance therewith. The City shall have the right and ability, after due notice to the Association to assess the Association, for the full amount owed and/or assess the property owners on a pro rata basis for all costs incurred by the City in performing said duties if the Association fails to do so. Said assessment shall constitute a lien, in favor of the City, upon the property for which the assessment is made.

SECTION 8.12 PARKS & OPEN SPACES

(a) Applicability. This section shall not apply to Major Creeks as set forth in Section 8.03 of this Ordinance, unless otherwise noted.

(b) General Requirements. Parks shall be easy to access and open to public view so as to benefit area developments, enhance the visual character of the City, protect public safety, and minimize conflict with adjacent land uses. The following guidelines shall be used in designing development around or adjacent to parks and adjacent development:

(1) Parks and Open Spaces. Parks shall be bounded by a street(s) or by other public uses unless otherwise specified in this Ordinance, the Zoning Ordinance, or a Planned Development (PD) ordinance (e.g. school, library, recreation center).

(2) Residential Lots.

a. Single-family and two-family residential lots shall be oriented such that they front or side onto parks and open spaces and they do not back to them, in accordance with Diagram 8.12-1.

b. Residential lots shall only be allowed to back onto a park or open space when the site's physical character (e.g., shape, topography, drainage) does not reasonably accommodate an alternative design or the layout of the subdivision complements the use of the park or open space (e.g., lots backing to a golf course); lots backing to a park or open space shall only be allowed upon approval from the Director of Development Services and the Director of Parks & Recreation.

(3) Access to Parks and Open Spaces. A proposed development adjacent to a park or open space shall not be designed to restrict public visibility or reasonable public access to the park or open space from other area developments. Street connections to existing or future adjoining subdivisions shall be required to provide reasonable access to parks and open space areas.

(4) Non-Residential Uses Adjacent to Parks. Where a non-residential use must directly abut a park or open space area, the use shall be oriented such that it sides, and does not back, onto the park or open space area if at all possible. The use shall be separated from the park or open space by a minimum six-foot (6') tall decorative metal fence with an irrigated living screen (see Section 8.06) unless otherwise approved as a Minor Waiver, in accordance with Section 9.01, by the Director of Development Services and the Director of Parks & Recreation. Access points to the park or open space area may be required by the City if a public benefit is established.

(5) Alleys Adjacent to Parks. Alleys should not be designed to encourage their use as a means of vehicular, bike or pedestrian travel to the park.

(6) Public Access Points Into Parks. Public access into parks and open spaces shall not be less than fifty feet (50') in width at the public right-of-way line, at the street curb, and at any other public access point (such as along Major Creeks, etc.). Such access shall not be part of a residential lot or other private property, and shall be kept open and unobstructed at all times.

(c) Streets Abutting a Park. Streets abutting a park or open space area shall be built in accordance with the Comprehensive Plan, the standards of this Ordinance, and all other applicable construction standards and/or ordinances. The City may, however, require any residential street built adjacent to a park or open space to be constructed to collector-street width to provide access, to accommodate possible on-street parking for park users, and to prevent traffic congestion.

(1) Abutting Street Oversizing. When park or open space land is acquired by the City, the City shall require at least sixty feet (60') of right-of-way be dedicated to provide for an abutting collector-sized street, unless otherwise approved by the City.

(d) Park Reservation and Dedication. Land for neighborhood and linear parks shall be reserved and dedicated in accordance with the locations recommended by the Parks and Recreation Board. All Preliminary and Final Plats shall be reviewed to determine if land dedications are necessary for neighborhood and linear parks. If land is required to be dedicated for park sites or open spaces, the City shall specify the proposed land requirements, configurations and locations. The Commission shall make the final determination of park land location and configuration during its review and approval of the Preliminary and Final Plats. Specific neighborhood and linear park sites and improvements shall be dedicated to the City upon approval of the Final Plat and upon issuance of a Letter of Final Acceptance (refer to Section 5.05).

(e) Site Criteria. Neighborhood and linear park sites shall be of a suitable size, dimension, topography and general character to meet the design criteria specified in the *Parks, Recreation & Open Space Master Plan.*

(f) Minimum Park Improvements. Unless waived by the Parks & Recreation Board, neighborhood and linear parks shall be improved by the developer prior to a Letter of Final Acceptance being issued by the City (refer to Section 5.05). Minimum park improvements, as determined by the City, shall include:

(1) Grading and clearance of unwanted vegetation, structures or improvements;

(2) Installation of storm drainage and stream erosion controls;

(3) Establishment of turf and planting of trees;

(4) Installation of perimeter streets and street lights; and

(5) Provision of water and sewer service to a location(s) on the park site as determined by the Director of Parks & Recreation and by the Director of Engineering Services.

(g) Additional Voluntary Park Improvements. A developer may request permission to construct, at his or her own expense, additional park improvements. The City may accept or reject voluntary dedications of park land and/or additional park improvements. Such voluntary dedications and/or improvements shall be considered for approval by the Parks & Recreation Board. All improvements in public parks and open spaces shall be consistent with the design criteria and objectives of the *Parks, Recreation & Open Space Master Plan*, and shall, upon installation, become the property of the City. Prior to constructing such additional park improvements, the developer shall enter into a Development Agreement with the City that defines, among other things, the work to be performed, construction schedules, improvement costs, performance surety, the amount to be reimbursed by the City (if any), and the timing of such reimbursement (if any). The City's Parks & Recreation Board shall assess and submit its recommendation to the City Council, and the Council shall consider and decide the proposed Development Agreement for park improvements.

(h) Completion of Land Dedication and Improvements. Park land shall be dedicated to the City concurrently with the filing of an approved Final Plat or Replat. All improvements specified in the Improvement Agreement, if applicable, shall be completed prior to approval of the Final Plat or Replat, except where future performance is provided for in the Improvement Agreement.

(i) Hike-and-Bike Trail Requirements.

(1) *Hike & Bicycle Trail Master Plan.* Hike-and-bike trails shall be constructed in accordance with the *Hike & Bicycle Trail Master Plan*.

(2) Requirements. Hike-and-bike trails, especially those providing access to and along Major Creeks and other open spaces, shall be in accordance with the following design criteria (unless otherwise approved by the Director of Parks & Recreation):

a. A minimum twenty-five foot (25') wide, level ground surface shall be provided for a twelve-foot (12') wide public hike-and-bike trail, where required. The twenty-five foot (25') wide, level ground surface may be provided within and/or outside of the 100-year floodplain (refer to Section 8.03).

b. The parkway of a public street may count towards the twenty-five-foot (25')-wide, level ground surface, upon approval of the Director of Parks & Recreation.

c. Low water crossings for the hike-and-bike trail may be allowed upon approval from the Director of Engineering Services and the Director of Parks & Recreation.

d. The hike-and-bike trail shall be designed so as to minimize visibility blind spots from public streets for public safety purposes.

e. Construction Plans for the development (refer to Section 5.01) shall include engineered drawings of trail cross-sections in accordance with the City's *Engineering Standards*.

(3) Locations. Locations of all trails shall be consistent with the locations designated on the *Hike & Bicycle Trail Master Plan*, and are subject to approval by the Director of Parks & Recreation.

a. The Director of Parks & Recreation shall have the authority to determine the placement of a public hike-and-bike trail at the time of Preliminary Plat review and approval.

b. The location of such trails shall be safe and economical.

c. No development shall interrupt future trail routes or otherwise hinder efficient public access to or from an existing or future planned trail. Gated and other limited access developments shall be designed such that they facilitate, and do not impede, through public access, emergency ingress and egress, usage and enjoyment of public trails.

(4) Trails Along Major Creeks and Greenways.

a. The location of trails within developments adjacent to Major Creeks or greenway trails recognized on the *Hike & Bicycle Trail Master Plan* shall be coordinated with the Parks & Recreation Department, and shall be staked in the field by the developer and approved by the Director of Parks & Recreation prior to the submittal of a Preliminary Plat.

b. The location of the trail shall be specified on the Preliminary Plat as the approved location for the hike-and-bike trail, and an easement for such shall be shown on the Preliminary and Final Plats for any portions of the trail that traverse private property.

(5) Trails in Relation to Golf Courses. When a trail system is extended through a golf course, improvements shall be made to protect and provide separation between users of the trail system and the golfers, at the developer's expense. Such improvements include, but are not limited to, a series of berms and trees to help protect trail users from errant golf balls. Upon approval of the Director of Parks & Recreation, a golf cart path may serve as a trail.

(6) Future Trails and Access for New Developments. When development is adjacent to an undeveloped property, a pedestrian access stub-out in conjunction with a street connection to the edge of the development (refer to Section 8.04(b)(9)) shall be required to allow for future access between developments.

(This page intentionally left blank.)

SECTION 9: RELIEF PROCEDURES

SECTION 9.01 PETITION FOR WAIVERS

(a) Purpose. The purpose of a petition for a Waiver to a particular standard or requirement of this Ordinance, as such are applicable to Plats or Construction Plans for a project, is to determine whether or not such particular standard or requirement should be applied to an application or project.

(b) Definitions. Waivers shall be classified as "minor" or "major", as defined in Section 10.02 (Definitions) of this Ordinance.

(c) Decision-Maker.

(1) Minor Waiver. A Minor Waiver is acted upon by the Director of Development Services or the Director of Engineering Services, as specified in Table 9.01-1.

a. Appeal. An appeal to a decision on a Minor Waiver by the Director of Development Services or the Director of Engineering Services (as applicable) may be considered by the Commission. If further appeal is made, the City Council shall then act on such an appeal. (See Section 9.01(j)).

(2) Major Waiver. A Major Waiver is acted upon by the Commission.

a. Appeal. An appeal to a decision on a Major Waiver by the Commission may be considered by the City Council (see Section 9.01(j)).

(d) Applicability.

(1) An applicant may request a Waiver of a particular standard or requirement applicable to a Preliminary Plat, to Construction Plans, or where no Preliminary Plat application has been submitted for approval, to a Final Plat or a Replat. A Waiver petition shall be specific in nature, and shall only involve relief consideration for one particular standard or requirement. An applicant may, if desired, submit more than one Waiver petition if there are several standards or requirements at issue.

(2) A petition for a Waiver shall not be accepted in lieu of a proportionality appeal (Section 9.02) or a vested rights petition (Section 9.03). If there is a question as to whether a proportionality appeal or vested rights petition is required instead of a petition for a Waiver, such determination shall be made by the Director of Development Services.

(e) Submission Procedures.

(1) A request for a Waiver shall be submitted in writing by the applicant with the filing of a Preliminary Plat, Construction Plans, Final Plat or Replat, as applicable. No Waiver may be considered or granted unless the applicant has made such written request.

(2) The applicant's request shall state the grounds for the Waiver request and all of the facts relied upon by the applicant. Failure to do so, will result in denial of the application unless the applicant submits a Waiver of Right to 30-Day Action in accordance with Section 3.03(e).

(f) Criteria.

(1) A Waiver to regulations within this Ordinance may be approved only when, in the decision-maker's opinion, undue hardship will result from strict compliance to the regulations.

(2) The decision-maker shall take into account the following factors:

a. The nature of the proposed land use involved and existing uses of the land in the vicinity;

b. The number of persons who will reside or work in the proposed development; and

c. The effect such Waiver might have upon traffic conditions and upon the public health, safety, convenience and welfare in the vicinity.

(3) No Waiver shall be granted unless the decision-maker finds:

a. That there are special circumstances or conditions affecting the land involved or other constraints such that the strict application of the provisions of this Ordinance would deprive the applicant of the reasonable use of his or her land; and

b. That the Waiver is necessary for the preservation and enjoyment of a substantial property right of the applicant, and that the granting of the Waiver will not be detrimental to the public health, safety or welfare or injurious to other property in the area; and

c. That the granting of the Waiver will not have the effect of preventing the orderly subdivision of other lands in the area in accordance with the provisions of this Ordinance.

(4) A Waiver may be granted only when in harmony with the general purpose and intent of this Ordinance so that the public health, safety and welfare may be secured and substantial justice done. Financial hardship to the applicant shall not be deemed to constitute undue hardship.

(5) No Waiver shall be granted unless it represents the minimum degree of variation of requirements necessary to meet the needs of the applicant.

(6) The decision-maker shall not authorize a Waiver that would constitute a violation of, or conflict with, any other valid ordinance, code, regulation, master plan or Comprehensive Plan of the City.

(7) Any falsification of information by the applicant shall be cause for the Waiver request to be denied. If the Waiver request is approved based upon false information, whether intentional or not, discovery of such false information shall nullify prior approval of the Waiver, and shall be grounds for reconsideration of the Waiver request.

(g) **Burden of Proof.** The applicant bears the burden of proof to demonstrate that the requirement for which a Waiver is requested, if uniformly applied, imposes an undue hardship or disproportionate burden on the applicant. The applicant shall submit the burden of proof with the original submittal.

(h) **Decision.** The decision-maker shall consider the Waiver petition and, based upon the criteria set forth in Section 9.01(f), shall take one of the following actions:

(1) Deny the petition, and impose the standard or requirement as it is stated in this Subdivision Ordinance; or

(2) Grant the petition, and waive in whole or in part the standard or requirement as it is stated in this Ordinance.

(i) **Notification of Decision on Petition.** The applicant shall be notified of the decision on the Waiver by the applicable decision-maker (e.g., the Director of Development Services, Director of Engineering Services, Commission or City Council, as applicable), within fourteen (14) calendar days following the decision.

(j) **Appeal.**

(1) Initiation of an Appeal. The applicant or four (4) voting members of the Commission may appeal a waiver decision of any Director, as allowed within the Subdivision Ordinance. The written request to appeal shall be submitted to the Director of Development Services within fourteen (14) calendar days following the denial decision. (See Table 9.01-1)

(2) Appeal to Planning & Zoning Commission. The Commission shall consider the appeal at a public meeting no later than thirty (30) calendar days after the date on which the notice of appeal is submitted to the Director of Development Services. At this meeting, new information may be presented and considered, if available, that might alter the previous decision to deny the Waiver. The Commission may affirm, modify or reverse the previous decision by simple majority vote.

(3) Appeal to City Council. The applicant, the Director of Development Services or four (4) voting members of City Council may appeal the Commission's decision by submitting a written notice of appeal to the Director of Development Services within fourteen (14) calendar days following the Commission's decision. The City Council shall consider the appeal at a public meeting no later than thirty (30) calendar days after the date on which the notice of appeal is submitted to the Director of Development Services. The City Council may affirm, modify or reverse the Commission's decision by simple majority vote. The decision of the City Council is final.

(k) **Effect of Approval.** Following the granting of a Waiver, the applicant may submit or continue the processing of a Plat or Construction Plans, as applicable. The Waiver granted shall remain in effect for the period the Plat or Construction Plans are in effect, and shall expire upon expiration of either or both of those applications. Extension of those applications shall also result in extension of the Waiver.

SECTION 9.02 PROPORTIONALITY APPEAL

(a) Purpose and Applicability.

(1) Purpose. The purpose of a petition for relief from a dedication or construction requirement is to ensure that the imposition of uniform dedication and construction standards to a proposed development does not result in a disproportionate burden on the property owner, taking into consideration the nature and extent of the demands created by the proposed development on the City's roadways and public facilities systems.

(2) Applicability. A petition for relief under this Section 9.02 may be filed by the applicant to contest any requirement to dedicate land or to construct public improvements as required by this Ordinance or attached as a condition to approval of the application. A petition under this Section 9.02 shall not be used to waive standards on grounds applicable to any Waiver application, as outlined in Section 9.01.

(b) Petition Requirements.

(1) Form of Petition. The petition for relief from a dedication or construction requirement shall allege that application of the standard relating to the dedication or construction requirement is not roughly proportional to the nature and extent of the impacts created by the proposed development on the City's water, wastewater, storm drainage, parks or roadway system, as the case may be, or does not reasonably benefit the proposed development.

(2) Study Required. The applicant shall provide a study in support of the petition for relief that includes the following information:

a. Total capacity of the City's water, wastewater, storm drainage, parks or roadway system to be utilized by the proposed development, employing standard measures of capacity and equivalency tables relating the type of development proposed to the quantity of system capacity to be consumed by the development. If the proposed development is to be developed in phases, such information also shall be provided for the entire development proposed, including any phases already developed.

b. Total capacity to be supplied to the City's water, wastewater, storm drainage, parks or roadway system by the proposed dedication of an interest in land or construction of public improvements. If the application is part of a phased development, the information shall include any capacity supplied by prior dedications or construction of public improvements.

c. Comparison of the capacity of the City's public facilities system(s) to be consumed by the proposed development with the capacity to be supplied to such system(s) by the proposed dedication of an interest in land or construction of public improvements. In making this comparison, the impacts on the City's public facilities system(s) from the entire development shall be considered.

d. The effect of any City participation in the costs of oversizing the public improvement to be constructed in accordance with the City's requirements.

e. Any other information that shows the alleged disproportionality between the impacts created by the proposed development and the dedication or construction requirement imposed by the City.

(3) Time for Filing Petition and Study. A petition for relief from a dedication or construction requirement shall be filed with the Director of Engineering Services within fourteen (14) calendar days following the Commission's decision to conditionally approve or deny an application for approval of an application. The study in support of the petition shall be filed within sixty (60) calendar days following the initial decision, unless the applicant (petitioner for relief) seeks an extension in writing. The Director of Engineering Services may extend the time for submitting the study for a period not to exceed an additional thirty (30) calendar days for good cause shown.

(4) Land in Extraterritorial Jurisdiction (ETJ). Where land or facilities to be dedicated are located in the ETJ of the City and are to be dedicated to Collin or Denton County, a petition for relief or study in support of the petition shall be accepted as complete for review by the Director of Engineering Services only when such petition or study is accompanied by verification that a copy has been delivered to and accepted by Collin or Denton County, as applicable.

(c) Processing of Petitions and Decision.

(1) Responsible Official. The Director of Engineering Services shall be the responsible official for a petition for relief from a dedication or construction requirement (see Section 2.04(a)(9)). Where the petition is for relief from dedication of rights-of-way or construction of a facility in the City's ETJ that is to be dedicated to Collin or Denton County, the Director of Engineering Services shall coordinate a recommendation with the appropriate County official responsible for reviewing plats.

(2) Evaluation & Recommendation.

a. The Director of Engineering Services shall evaluate the petition and supporting study and shall make a recommendation to the Commission for their consideration and recommendation to the City Council.

b. In evaluating the petition and study, the Director of Engineering Services shall take into account the maximum amount of any impact fees to be charged against the development for the type of public improvement that is the subject of the petition, or similar developments on the City's water, wastewater, roadway, storm drainage or parks systems. The Director of Engineering Services may utilize any reasonable methodology in evaluating the applicant's study, including impact fee methodologies.

c. In order to achieve proportionality between the demands created by a proposed development on public facilities and the obligation to provide adequate public facilities, the City may participate in the costs of public improvements, credit or offset the obligations against payment of impact fees, or relieve the property owner any of the obligations in response to a petition for relief from a dedication or construction requirement pursuant to Section 9.02.

(3) Decision-Maker. The Commission shall decide the petition for relief from a dedication or construction requirement.

(4) Public Hearing. The Commission shall conduct a public hearing within sixty (60) calendar days after the study supporting the petition (refer to Section 9.02(b)) is filed with the Director of Engineering Services.

(5) Burden of Proof. The applicant bears the burden of proof to demonstrate that the application of a dedication or construction requirement that is uniformly applied imposes a disproportionate burden on the applicant.

(6) Decision. The Commission shall consider the petition for relief from a dedication or construction requirement based upon the following criteria:

a. The Commission shall determine whether the application of the standard or condition is roughly proportional to the nature and extent of the impacts created by the proposed development on the City's water, wastewater, storm drainage, parks or roadway system, and whether the application of the standard or condition reasonably benefits the development.

b. In making such determination, the Commission shall consider the evidence submitted by the applicant, the report and recommendation of the Director of Engineering Services and, where the property is located within the City's ETJ, any recommendations from Collin or Denton County, as applicable.

(7) Action. Based on the criteria in Section 9.02(c)(6), the Commission shall take one of the following actions:

a. Deny the petition for relief, and impose the dedication or construction requirement as required by this Ordinance; or

b. Grant the petition for relief, and waive any dedication or construction requirement to the extent necessary to achieve proportionality; or

c. Grant the petition for relief, and direct that the City participate in the costs of acquiring land for or constructing the public improvement under standard participation policies.

(8) Notification of Decision on Petition. The applicant shall be notified of the decision on the petition for relief by the Director of Engineering Services within fourteen (14) calendar days following the Commission's decision.

(d) Appeal of the Decision on a Petition for Relief.

(1) Initiation of an Appeal. The applicant or no less than four (4) voting members of City Council may appeal the decision of the Commission by submitting a written notice of appeal to the Director of Development Services within fourteen (14) calendar days following the date of the Commission's decision.

a. For a City Council-initiated appeal, the Council shall consider and act on whether it will appeal the Commission's decision at its first regular meeting (for which there is time to include such appeal on its posted agenda, as required by State law) that occurs after the Commission meeting at which the decision was made.

b. Written notice of the City Council's vote to appeal shall be submitted to the Director of Development Services within seven (7) calendar days following the City Council's vote to appeal the decision.

c. For an applicant-initiated appeal, a letter stating the reasons for the appeal, citing the specific applicable section(s) of the Subdivision Ordinance, shall be submitted by the applicant.

d. The Director of Development Services may, on his/her own initiative, appeal the decision of the Commission by scheduling an appeal on the City Council's next regular meeting (for which there is time to include such appeal on its posted agenda as required by State law) that occurs after the Commission meeting at which the decision was made.

(2) Council Decision. The City Council shall consider the appeal at a public meeting no later than thirty (30) calendar days after the date on which the notice of appeal is submitted to the Director of Development Services. The City Council may affirm, modify or reverse the decision of the Commission by simple majority vote. The decision of the City Council is final.

(e) Expiration or Failure to File Application. Where an application was denied based upon the imposition of the standard requiring dedication of land or construction of a required public improvement and the Commission's decision (or decision on appeal) is to grant some level of relief, the applicant shall resubmit the application within sixty (60) calendar days following the date the petition for relief is granted, in whole or in part, showing conformity with the Commission's decision (or decision on appeal) on the petition.

(1) If such re-submittal of the application is not made within the sixty-day (60-day) period, the relief granted by the Commission on the petition shall expire.

(2) If the re-submittal of the application is modified in any other way, a new petition for relief may be required by the Director of Engineering Services.

(3) If the application for which relief was granted is denied on other grounds, a new petition for relief may be required by the Director of Engineering Services.

(f) Effect of Relief.

(1) The Director of Engineering Services may require the applicant to submit a modified application or supporting materials consistent with the relief granted by the Commission on the petition.

(2) The relief granted on the petition shall remain in effect for the period the application is in effect, and shall expire upon expiration of the plat or related application.

SECTION 9.03 VESTED RIGHTS PETITION

(a) Purpose. The purpose of a vested rights petition is to determine whether an application should be processed under the terms of a previous ordinance, to provide a process for determination of possible vested status, and to determine when certain permits are subject to expiration.

(b) Applicability.

(1) A vested rights petition may be submitted for any application authorized under this Ordinance.

(2) A vested rights petition cannot be submitted by an applicant along with submission of a request for a text amendment to this Ordinance, a Zoning Map amendment, or any other request for a legislative decision by the City Council.

(c) Submission. A vested rights petition shall be submitted to and officially filed with the City's responsible official (see Section 9.03(g)) in accordance with the Texas Local Government Code, Chapter 245 or successor statute. Submission of a vested rights petition shall be deemed as an automatic waiver of the applicant's right, and the City's obligation, to process and act upon applications as required by State law (Chapter 212 of the Texas Local Government Code), and as provided in Section 3.03(e) of this Ordinance. Submission of such petition shall stay further proceedings on the related application until a final decision is reached on the vested rights petition.

(d) Effect. If a properly submitted vested rights petition is approved in whole or in part, the responsible official shall then process the original application and the decision-maker shall decide the application in accordance with the standards specified in the relief order based on prior ordinance requirements or development standards, or shall extend the validity of the original application that would otherwise be subject to expiration pursuant to this Ordinance.

(e) Form of Petition. The vested rights petition shall allege in writing that the applicant has a vested right for some or all of the land subject to the application under Texas Local Government Code, Chapter 245 or successor statute, or pursuant to Texas Local Government Code, Section 43.002 or successor statute, that requires the City to review and decide the application under standards that were in effect prior to the effective date of the currently applicable standards. The petition shall include the following information and documents:

(1) A written vested rights petition form, with a notarized original signature of the property's owner;

(2) A narrative description of the grounds for the petition, including a statement as to whether the petition asserts a vested right related to a specific standard or to an entire project;

(3) A copy of each approved or pending application which is the basis for the contention that the City may not apply current standards to the application which is the subject of the petition;

(4) The official filing date of the application;

(5) The date the subdivision for which the application was submitted was commenced;

(6) Identification of all standards otherwise applicable to the application from which relief is sought;

(7) Identification of any current standards which applicant agrees can be applied to the application at issue;

(8) A narrative description of how the application of current standards affect proposed landscaping, open space or park dedication, shown on the application for which the petition is filed;

(9) A copy of any prior vested rights determination involving the same land; and

(10) Whenever the applicant alleges that an application subject to expiration should not be terminated, a description of the events constituting progress toward completion of the subdivision for which the application was approved. The applicant shall reimburse the City for all related legal costs for review of the vested rights petition. This reimbursement shall be paid in full prior to any decision on the petition.

(f) Time for Filing Petition. A vested rights petition shall be filed with an application for which a vested right is claimed, except that the petition may be filed before the date of expiration of any already approved application when filed pursuant to Section 9.03(m), *Dormant Projects*. Where more than one application is authorized to be filed simultaneously by this Ordinance, the petition may be filed simultaneously for each application.

(g) Processing of and Decision on Petition.

(1) Responsible Official. The responsible official for a vested rights petition is the same as that for processing the application with which the petition is associated, except where a petition is submitted pursuant to Section 3.07 of this Ordinance, *Expiration for Projects Approved Prior to September 1, 2005*. Where multiple applications are submitted, and there is more than one responsible official, the decision of each responsible official shall be coordinated with that of any other responsible official on the vested rights petition. The City Attorney shall also be notified of the vested rights petition following its filing and acceptance for processing. The applicant shall reimburse the City for all related legal costs for review of a vested rights petition. This reimbursement shall be paid in full prior to filing of the Final Plat.

(2) Action and/or Decision by Responsible Official.

a. If the responsible official is the decision-maker on the original related application, that official shall determine whether the relief requested in the vested rights petition should be granted in whole or in part, and shall formulate a written report summarizing the official's reasoning and recommendation.

b. The applicant shall be notified of the decision within fourteen (14) calendar days following the date the vested rights petition was filed at the City.

c. The responsible official may defer making a decision on the vested rights petition and instead forward the petition to the Commission for a decision, in accordance with the process outlined in Section 9.03(g)(3).

(3) Decision by Planning & Zoning Commission. If the original related application is to be decided by the Commission, or if the responsible official defers making a decision on a vested rights petition pursuant to Section 9.03(g)(2)c., the responsible official for that type of application shall submit a report in the form of a recommendation on the vested rights petition to the Commission. The Commission shall render a decision on the vested rights petition within thirty (30) calendar days following the date the petition was filed at the City. The Commission's decision on a vested rights petition shall be upon a simple majority vote of the full Commission's voting members.

(4) Decision by City Council. Where the City Council is the final decision-maker on the related application, or for any petition submitted pursuant to Section 9.03(m), *Dormant Projects*, the responsible official for that type of application shall submit a report in the form of a recommendation on the vested rights petition to the City Council. The Council shall render a decision on the vested rights petition within thirty (30) calendar days following the date the petition was filed at the City. The City Council's decision on a vested rights petition shall be upon a simple majority vote of the full Council's voting members, and shall be final.

(5) Appeal of Decision on Petition. The applicant may appeal, to City Council, the responsible official's or Commission's decision on the vested rights petition by submitting written notice of appeal to the applicable responsible official within fourteen (14) calendar days following the date of such decision. The City Council shall hear and decide the appeal within thirty (30) calendar days following receipt of the notice of appeal by the City. Approval of an appeal by the City Council shall only be upon a favorable vote of at least four (4) of the Council's voting members, and shall be final.

(6) Effect on Related Applications. A final decision on the vested rights petition or appeal under this Section must be achieved prior to further processing, and prior to any consideration of, or decision on, the related application. Upon such final resolution and decision on a vested rights petition, the responsible official shall commence processing, review and consideration for the related application as provided in this Ordinance.

(h) Criteria for Approval.

(1) Factors. The decision-maker shall decide the vested rights petition based upon the following factors:

a. The nature and extent of prior applications filed for the land subject to the petition;

b. Whether any prior vested rights determinations have been made with respect to the property subject to the petition;

c. Whether any prior approved applications for the property have expired or have been terminated in accordance with State law or local ordinances;

d. Whether current standards adopted after commencement of the project affect proposed use of the land, landscaping or tree preservation, open space or park dedication, lot size, lot dimensions, lot coverage or building size based upon the proposed application;

e. Whether any statutory exception applies to the standards in the current Subdivision Ordinance from which the applicant seeks relief;

f. Whether any prior approved applications relied upon by the applicant have expired;

g. For petitions filed pursuant to Section 3.07 of this Ordinance, *Expiration for Projects Approved Prior to September 1, 2005*, whether any of the events in Section 3.07 have occurred;

h. Any other applicable provisions outlined in Chapter 245 or Section 43.002 of the Texas Local Government Code, or successor statutes.

(2) Conditions. If the claim of vested rights is based upon a pending application, subject to standards that have been superseded by current standards of this Ordinance, the decision-maker may condition any relief granted on the vested rights petition on the approval of the pending application.

(i) Action and Record of Action on the Vested Rights Petition.

(1) Action. The decision-maker may take any of the following actions:

a. Deny the relief requested in the petition, and direct that the application shall be reviewed and decided under currently applicable standards; or

b. Grant the relief requested in the petition, and direct that the related application be reviewed and decided in accordance with the standards contained in identified prior regulations; or

c. Grant the relief requested in part, and direct that certain identified current standards be applied to the related application, while standards contained in identified prior regulations also shall be applied; or

d. For petitions filed pursuant to Section 3.07 of this Ordinance, *Expiration for Projects Approved Prior to September 1, 2005*, specify the expiration date or the conditions of expiration for the related application(s).

(2) Record. The responsible official's report and the decision on the vested rights petition shall be recorded in writing in an order identifying the following:

a. The nature of the relief granted, if any;

b. The related application(s) upon which relief is premised under the petition;

c. Current standards which shall apply to the related application for which relief is sought, if applicable;

d. Prior standards which shall apply to the related application for which relief is sought, including any procedural standards, if applicable;

e. The statutory exception or other grounds upon which relief is denied in whole or in part on the petition;

f. To the extent feasible, subsequent related applications that are subject to the same relief granted on the petition; and

g. For petitions filed pursuant to Section 3.07 of this Ordinance, *Expiration for Projects Approved Prior to September 1, 2005*, the date of expiration of the related application.

(j) Related Application Following Final Decision on the Vested Rights Petition.

(1) Following the City's final decision on the vested rights petition, the applicant shall, if necessary, revise the related application such that it conforms to the City's decision on the vested rights petition.

(2) The decision-maker on the related application shall review and consider the revised application in accordance with the procedures for deciding that type of application, as outlined in this Ordinance, and in conformity with any relief granted.

(3) If the relief granted on the vested rights petition is consistent with the related application on file, no revisions shall be necessary, and the related application shall be deemed officially filed at the time of the final decision on the vested rights petition.

(k) Appeal of the Decision on a Vested Rights Petition.

(1) Initiation of an Appeal. The applicant or no less than four (4) voting members of City Council may appeal the decision of the Commission by submitting a written notice of appeal to the Director of Development Services within fourteen (14) calendar days following the date of the Commission's decision.

a. For a City Council-initiated appeal, the Council shall consider and act on whether it will appeal the Commission's decision at its first regular meeting (for which there is time to include such appeal on its posted agenda, as required by State law) that occurs after the Commission meeting at which the decision was made.

b. Written notice of the City Council's vote to appeal shall be submitted to the Director of Development Services within seven (7) calendar days following the City Council's vote to appeal the decision.

c. For an applicant-initiated appeal, a letter stating the reasons for the appeal, citing the specific applicable section(s) of the Subdivision Ordinance, shall be submitted by the applicant.

d. The Director of Development Services may, on his/her own initiative, appeal the decision of the Commission by scheduling an appeal on the City Council's next regular meeting (for which there is time to include such appeal on its posted agenda as required by State law) that occurs after the Commission meeting at which the decision was made.

(2) Council Decision. The City Council shall consider the appeal at a public meeting no later than thirty (30) calendar days after the date on which the notice of appeal is submitted to the Director of Development Services. The City Council may affirm, modify or reverse the decision of the Commission by simple majority vote. The decision of the City Council is final.

(l) Expiration & Extension.

(1) Expiration. Relief granted on a vested rights petition shall expire on occurrence of one of the following events:

a. The applicant fails to submit a revised application that is consistent with the relief granted, if any, within sixty (60) calendar days following the final decision on the vested rights petition;

b. The application for which relief was granted on the vested rights petition is denied; or

c. The application for which relief was granted on the vested rights petition expires.

(2) Extension. Extension of the date of expiration for the application for which relief was granted on a vested rights petition shall result in extension of the relief granted on the vested rights petition for the same time period.

(m) Dormant Projects.

(1) Definitions. For purposes of this Section 9.03(m) only:

a. *Initial permit* means any of the following types of approvals granted under this Subdivision Ordinance, or any predecessor subdivision or development-related ordinance that was in effect prior to the adoption of this Ordinance: Preliminary Plat, Construction Plans, Construction Release, Waivers to any requirement in this Subdivision Ordinance (per Section 9.01), or any other application that was approved subject to a schematic drawing illustrating the location, arrangement, orientation or design of development, lots or improvements on a site intended for development.

b. *Final permit* means a Final Plat approved under this Subdivision Ordinance, or any predecessor subdivision or development-related ordinance that was in effect prior to the adoption of this Ordinance.

(2) Expiration of Permits. Any application for an initial permit that was approved or filed before, but that was not subject to an expiration date, two (2) years prior to the adoption date of this Subdivision Ordinance shall expire on the effective date of this Subdivision Ordinance.

(3) Reinstatement. The property owner of the land subject to an initial permit that expires under Section 9.03(m)(2) may petition the Commission to reinstate such permit by filing a written petition within sixty (60) calendar days following the effective date of this Subdivision Ordinance. The petition shall clearly state the grounds for reinstatement, and shall be accompanied by documentation of one of the following:

a. As of two (2) years prior to the effective date of this Subdivision Ordinance, one of the following events had occurred:

i. A final permit to continue toward completion of the project was submitted to the City for all or part of the land subject to the approved initial permit and was approved by the City, or was filed and was subsequently approved by the City;

ii. An application for a final permit to continue toward completion of the project was submitted to the City for all or part of the land subject to the expired initial permit, but such application was rejected on grounds of incompleteness (consistent with Texas Local Government Code, Chapter 245.005(c)(2));

iii. Costs for development of the land subject to the initial permit, including costs associated with roadway, utility and other infrastructure facilities designed to serve the land in whole or in part, but exclusive of land acquisition costs, were incurred in the aggregate amount of five percent (5%) of the most recent appraised market value of the land;

iv. Fiscal security was posted with the City to guarantee performance of obligations required under this Subdivision Ordinance, including the construction of required improvements associated with the proposed development, for all or a part of the land subject to the approved initial permit; or

v. Utility connection fees or impact fees for all or part of the land subject to the approved initial permit were paid to the City.

b. After two (2) years prior to the adoption date of this Subdivision Ordinance, but before the expiration date specified in Section 9.03(m)(2), one of the following events had occurred:

i. A final permit was approved for all or part of the land subject to the approved application, and remained in effect for such land on such expiration date; or

ii. A complete application for approval of a final permit for all or part of the land subject to the approved initial permit was pending for decision on such expiration date.

(4) Commission Action on Reinstatement. The Commission may take one of the following actions:

a. Reinstate the expired initial permit without an expiration date, if it finds that the applicant has met any one of the criteria listed in Section 9.03(m)(3)a.;

b. Reinstate the initial permit for all or part of the land subject thereto, if it finds that the applicant has met any one of the criteria listed in Section 9.03(m)(3)b., subject to such expiration dates or other conditions that ensure that the remaining land that is not subject to an approved or pending final permit application will be developed in a timely fashion. In granting relief under this provision, the Commission may require that development of such remaining land is subject to standards enacted after approval of the initial permit;

c. Deny the reinstatement petition, if it finds that the applicant has failed to meet any of the criteria in Section 9.03(m)(3); or

d. Reinstate the permit for only that part of the land subject to a pending final permit application, if it finds that the applicant has met the criteria in Section 9.03(m)(3)b.ii

and the pending application subsequently was approved, and deny the reinstatement petition for the remaining land subject to the expired initial permit.

(This page intentionally left blank.)

SECTION 10: DEFINITIONS

SECTION 10.01 USAGE & INTERPRETATION

(a) **Usage.** The definitions within this Section 10 are intended to provide descriptions for words and terms used within this Subdivision Ordinance. Absent any conflict, words and terms used in this Subdivision Ordinance shall have the meanings ascribed thereto in this Section 10.

(b) **Conflicts.** When words and terms are defined herein, and are also defined in other ordinance(s) of the City, they shall be read in harmony unless there exists an irreconcilable conflict, in which case the definition contained in this Section 10 shall control.

(c) **Present and Past Tenses.** Words used in the present tense include the future; words in the singular number include the plural number, and words used in the plural number include the singular number.

(d) **Usage of Shall and May.** The word shall is mandatory and not directory. The word may is directory and not mandatory.

(e) **Words Not Defined.** For any definition not listed in this Section 10, the definition found within the latest edition of Webster's Dictionary shall be used.

(f) **Certain Terms and Words.** Certain terms and words are to be used and interpreted as described and/or defined within the sections of this Subdivision Ordinance wherein they apply to certain regulations.

SECTION 10.02 DEFINITIONS

(a) **Definitions.** The following definitions shall apply to terms and words used within this Subdivision Ordinance.

100-Year Floodplain. The flood having a one percent (1%) chance of being equaled or exceeded in any given year, based upon a fully developed watershed and the City's criteria to accommodate a 100-year storm in a Major Creek.

Abutting. Adjacent, adjoining and contiguous to. It may also mean having a lot line in common with a right-of-way or easement, or with a physical improvement such as a street, waterline, park, or open space.

Access. A means of approaching or entering a property, or the ability to traverse a property (such as in the use of the phrase pedestrian access easement).

Alley. A minor right-of-way, generally dedicated to public use, which affords a secondary means of vehicular access to the back or side of properties otherwise abutting a street, and which may be used for utility service purposes.

Amending Plat. See *Plat, Amending*.

Amenity. Aesthetic or other physical improvements to a development that increase its quality, desirability, and/or marketability to the public, and that are described within Section 8.11(c)(1) of this Ordinance.

Appeal. A request for review of and relief from any decision applying a provision of this Ordinance.

Applicant. The person or entity responsible for the submission of an application. The applicant must be the actual owner of the property for which an application is submitted, or shall be a duly authorized representative of the property owner. Also see *Developer*.

Application (also Development Application, Plat Application). The package of materials, including but not limited to an Application Form, a Plat, completed checklist, Tax Certificate, Construction Plans, special drawings or studies, and other informational materials, that is required by the City to initiate City review and approval of a development project.

Application Form. The written form (as provided by and as may be amended by the City) that is filled out and executed by the Applicant and submitted to the City along with other required materials as a part of an application.

Application, Complete. See *Complete Application.*

Approval. Approval constitutes a determination by the official, board, commission or City Council responsible for such determination that the application is in compliance with the minimum provisions of this Ordinance. *NOTE:* Such approval does not constitute approval of the engineering or surveying contained in the plans, as the design engineer or surveyor that sealed the plans is responsible for the adequacy of such plans.

Arterial Street. See *Thoroughfare, Major or Minor*.

Block. A grouping of residential lots (and their alleys) that are partially or fully surrounded by one or more streets. A block consists of one or two tiers of lots. Lots that are separated by an alley are in the same block, but lots that are separated by a street are in different blocks.

Buffer. An area of permanent native vegetation that is adjacent to a water course and/or wetland that is managed to maintain the integrity of the water course and/or wetland to reduce the impact of upland sources by:

a. Trapping, filtering and converting pollutants;

b. Reducing sediment loads;

c. Reducing runoff velocity;

d. Stabilize stream banks and wetland edges;

e. Reduce water temperatures; and

f. Provide habitat for urban wildlife.

Building. Any structure intended for shelter, occupancy, housing or enclosure for persons, animals or property. When separated by dividing walls without openings, each portion of such structure so separated shall be deemed a separate building.

Building Line. A line parallel, or approximately parallel, to any front lot line at a specific distance therefrom, marking the minimum distance from the front lot line that a building may be erected.

Building Permit. An official certificate issued by the City through the Chief Building Official that indicates conformance with or approved conditional waiver from City regulations and authorizes construction of buildings or other described construction on the premises for which it is issued.

Centerline, Streets or Alleys. An imaginary line erected midway between the bounding right-of-way lines of a street or alley. Where the bounding right-of-way lines are irregular, the centerline is to be determined by the Director of Engineering Services.

Certificate of Occupancy. An official certificate issued by the City through the Chief Building Official that indicates conformance with or approved conditional waiver from City regulations and authorizes legal use of the premises for which it is issued; may be referred to as an Occupancy Permit.

Chief Building Official. The person(s) so designated by the Director of Development Services to provide oversight for and have responsibility of the Building Inspections Division of the Development Services Department; such official issues Building Permits and Certificates of Occupancy and enforces the Zoning Ordinance, Building Code, and any applicable provisions of this Subdivision Ordinance. This term shall also include any designee of the Chief Building Official.

City. The City of Frisco, Texas, unless otherwise specified in the regulation.

City Attorney. The person(s) so designated by the City Council to provide oversight for and have legal responsibility for the City. This term shall also include any designee of the City Attorney.

City Council. The elected body that governs the City under State law and City Charter and that is duly authorized to operate in the manner prescribed by City ordinances and resolutions. The term *City Council* as used within this Subdivision Ordinance shall mean the City Council of the City of Frisco.

City Engineer. See *Director of Engineering Services*.

City Manager. The person(s) so designated by the City Council, or the City Manager's designee.

City Planner. See *Director of Development Services*.

Collector Street. Those streets which carry traffic from local streets to major thoroughfares and freeways. Such streets shall also be as described within the Comprehensive Plan and the *Engineering Standards*. Also may be referred to as a *Type C Thoroughfare* or *Type D Thoroughfare*.

Commenced/Commencement. Refers to the beginning of the development (or construction) of a subdivision; the initial disturbance of soils associated with clearing, grading, or excavating activities.

Commission. The Planning & Zoning Commission of the City of Frisco. See *Planning & Zoning Commission*.

Complete Application. An application that meets the standards of this Subdivision Ordinance, and has been deemed complete by the City in accordance with Section 3.03 of this Ordinance and the Texas Local Government Code, Chapter 245, or successor statute.

Comprehensive Plan. The City's officially Comprehensive Plan which includes policies, in written and graphic form, on (but not limited to) thoroughfares, land use, parks, open space, hike and bicycle trails, and other facets of the City's physical form; such policies govern the future development of the City and consist of various components governing specific geographic areas, functions, and services of the City.

Construction. See *Development*.

Construction Plans. The drawings and technical specifications that conform to this Ordinance and all other applicable ordinances of the City. Construction Plans, including bid documents, contract conditions, and escrow agreements, where applicable, provide a graphic and written description of the character and scope of the work to be performed in construction of a development.

Conveyance Plat. See *Plat, Conveyance*.

Construction Release. Official authorization by the City, through the Director of Engineering Services, that indicates conformance with City regulations and authorizes construction of improvements or other described construction, in conformance with approved Construction Plans, on the premises for which it is given.

Corner Lot. See *Lot, Corner*.

Cul-De-Sac. Cul-de-sac shall mean a *Local Street* (see definition) having only one vehicular access to another street and terminated by a vehicular turn-around.

Day, Business. Shall be defined as Monday through Friday, excluding City-recognized holidays.

Day, Calendar. Each day of a particular calendar year.

Dead End Street. Dead end street shall mean a street, other than a cul-de-sac, with only one outlet.

Deed Restriction. A limitation on the use of land set forth or referred to in the title deed of such land. Such limitations run with the land and are binding upon present and subsequent owners of the land. Deed restrictions are not enforced by the City.

Developer. A person or entity, limited to the property owner or duly authorized representative thereof, who proposes to undertake or undertakes the division or improvement of land and/or other activities covered by this Subdivision Ordinance so as to constitute a *subdivision*, including the preparation of a plat showing the layout of the land and the public improvements involved therein. The word *developer* is intended to include the terms *subdivider*, *property owner*, and, when submitting platting documents, *applicant*.

Development. Any activities related to the platting or physical subdivision of land including the construction, reconstruction, conversion, or enlargement of buildings or structures; the construction of impervious surfaces (e.g., parking lots); the installation of utilities, roadways, drainage facilities or other infrastructure; or any disturbance of the surface or subsurface of the

land in preparation for such construction activities, including grading, drainage, storage, paving, clearing, filling, and/or removal of vegetation or soil, and any mining, dredging, excavation or drilling operations.

Development Agreement. An agreement authorized and in accordance with Section 212.172 of the Texas Local Government Code between the City and a property owner within the City or in the ETJ.

Development Application. An application for any type of plat or construction plan/drawing authorized or addressed by this Subdivision Ordinance. Also may be referred to as a *permit* within the Texas Local Government Code, Chapter 245.

Development Plat. See *Plat, Development*.

Director of Engineering Services. The person(s) so designated by the City Manager to provide oversight for and have responsibility of the Engineering Services Department; as used for responsibility and review purposes within this Subdivision Ordinance, this term shall also include any designee of the Director of Engineering Services.

Director of Parks & Recreation. The person(s) so designated by the City Manager to provide oversight for and have responsibility of the Parks & Recreation Department; as used for responsibility and review purposes within this Subdivision Ordinance, this term shall also include any designee of the Director of Parks & Recreation.

Director of Development Services. The person(s) so designated by the City Manager to provide oversight for and have responsibility of the Development Services Department; as used for responsibility and review purposes within this Subdivision Ordinance, this term shall also include any designee of the Director of Development Services.

Director of Public Works. The person(s) so designated by the City Manager to provide oversight for and have responsibility of the Public Works Department; as used for responsibility and review purposes within this Subdivision Ordinance, this term shall also include any designee of the Director of Public Works.

Double-Frontage Lot. See *Lot, Double Frontage*.

Driveway. A paved entranceway serving primarily vehicles that allows for access to a lot or facility, and is intended for vehicular movements between the roadway and any portion outside the street right-of-way.

Easement. A right granted to the City, to the public generally, and/or to a private entity for the purpose of limited public or semi-public use across, over, or under private land.

Engineer. A person who has been duly licensed by the Texas Board of Professional Engineers to engage in the practice of engineering in the State of Texas. (Also known as *Professional Engineer*, *Registered Engineer*, *Registered Professional Engineer*, or *Licensed Engineer*.)

Engineering Standards. A document adopted by City Council by resolution or ordinance, which is intended to establish standards for the design and construction of public facilities.

ETJ. See *Extraterritorial Jurisdiction*.

Exemption. A specified reason why a particular development is not subject to the requirements to plat or to a specific provision of this Ordinance.

Extraterritorial Jurisdiction (ETJ). The unincorporated area, not a part of any other municipality, which is contiguous to the corporate limits of the City, the outer limits of which are measured from the extremities of the corporate limits of the City outward for the distance as stipulated in Chapter 42 of the Texas Local Government Code, according to the population of the City, and in which area the City may regulate subdivisions and enjoin violation of provisions of this Subdivision Ordinance.

Facility(s). Infrastructure and other structures that support a development including, but not limited to, water distribution lines, sanitary sewer collection lines, storm sewer lines and other storm water management devices, thoroughfares, sidewalks, private utilities, etc.

Fence, Ornamental Metal. A decorative metal (such as "wrought iron") fence that shall be constructed of solid stock materials or tubular steel with minimum 16-guage pickets, 11-guage posts, and masonry support columns at maximum thirty feet (30') on center. Shall not include "chain link" type fencing.

File/Filed/Filing. See *Official Filing Date* and *Submission.*

Final Plat. See *Plat, Final*.

Fire Chief. The person(s) so designated by the City Manager to provide oversight for and have responsibility of the Fire Department; as used for responsibility and review purposes within this Subdivision Ordinance, this term shall also include any designee of the Fire Chief.

Fire Lane. See definition in the City's adopted Fire Code.

Flag Lot. See *Lot, Flag*.

Front Lot Line. See *Lot Line, Front*.

Habitat Study. A study in which the main purpose is the identification and protection of declared, critical habitat for threatened or endangered species and habitat used for nesting by birds listed in the Migratory Bird Treaty Act (MBTA).

Hike & Bicycle Trail Master Plan. The City's officially adopted Plan which includes policies in graphic and text form; such policies govern the future development of the City's hike-and-bike trail system.

Homeowners' Association (HOA). A community association which is organized within a development in which individual owners share common interests and responsibilities for open space, landscaping, amenities or facilities, and which operates under recorded land agreements. This term also includes Property Owners' Associations (POAs) and Property Management Corporations (PMCs) which are more typically formed for multi-family and nonresidential developments.

Improvement. Any man-made fixed item which becomes part of or placed upon real property.

Improvement Agreement. A legally binding document that is required by this Ordinance under Section 5.04 whenever public improvements to serve a development are deferred until after Final

Plat approval and recordation. Such document outlines the developer's acknowledged responsibility to complete and warranty improvements and to provide financial security for such improvements.

Improvement, Public. Any improvement, facility or service together with its associated public site, right-of-way or easement necessary to provide transportation, storm drainage, public or private utilities, parks or recreational, energy or similar essential public services and facilities, for which the City ultimately assumes the responsibility, upon a Letter of Final Acceptance being issued, for maintenance, operation and/or ownership.

Interior Lot. See *Lot, Interior*.

iSWM. The acronym for integrated Storm Water Management, which is a guide for the construction and design of developments. This guide is intended to help mitigate the impact of developments on storm water runoff by considering such runoff during early site planning and design phases. This guide was created by the North Central Texas Council of Governments (NCTCOG).

Key Lot. See *Lot, Key*.

Local Street. A street that is intended to provide a high level of access to adjacent developments and, generally, a low level of mobility. Such streets shall also be as described within the Comprehensive Plan and *Engineering Standards*.

Lot. An undivided tract or parcel of land that is or may be offered for sale, conveyance, or improvement and is occupied or intended to be occupied by a building or group of buildings. A lot has its principal frontage on a public street or officially approved private street, as shown on a plat of record or described by metes and bounds.

Lot, Corner. A lot which has at least two adjacent sides abutting for their full lengths on a street, provided that the interior angle at the intersection of such two (2) sides is less than one hundred thirty-five degrees (135°).

Lot Depth. The horizontal distance measured perpendicularly between two points on the front lot line and two points on the rear lot line which creates an area that meets (or exceeds) the zoning district's minimum width and depth requirements. Lot depth shall not include easements which are located behind the front building line that impair the use of the lot surface as a yard.

Lot, Double Frontage. A lot having a frontage on two (2) non-intersecting streets, as distinguished from a corner lot.

Lot, Flag. A lot having access to a street by means of a parcel of land having a depth greater than its frontage, and having a width less than the minimum required lot width. May also be referred to as a Panhandle Lot. (See Diagram 8.09-1)

Lot, Interior. A lot other than a corner lot.

Lot, Key. A corner lot that is designed such that the lots located directly behind it face the side street of the corner lot and are not separated by an alley.

Lot Frontage. That dimension of a lot or portion of a lot abutting on a street, excluding the side dimension of a corner lot.

Lot Line, Front. The narrower side of the lot abutting a street. Where two (2) lot lines abutting streets are of equal length, the owner shall have a choice in designating which shall be designated as the *Front Lot Line*, and therefore the lot frontage. For a lot which has a boundary line which does not abut the front street line, is not a rear lot line and lies along the same general directional orientation as the front and rear lot lines, said line shall be considered a front lot line in establishing minimum setback lines. (see Zoning Ordinance, Article VI, Appendix 1, Illustration #10).

Lot Line, Rear. The lot line farthest from and most parallel to the front lot line. For triangular lots, the point opposite the front lot line shall be considered the rear lot line and have a value of zero. (see Zoning Ordinance, Article VI, Appendix 1, Illustration #12)

Lot Line, Side. Any lot line not the front or rear lot line.

Lot Lines. The lines bounding a lot as defined herein. May also be referred to as a *Property Line*.

Lot of Record. A lot which is part of a subdivision, the plat of which has been recorded in the office of the County Clerk of Collin or Denton County or a lot subdivided by metes and bounds description prior to February 1984.

Lot Width. The horizontal distance measured between side lot lines parallel to the front lot line, and measured from the point on the building line that is closest to the front lot line. (see Zoning Ordinance, Article VI, Appendix 1, Illustration #10)

Major Creek. The term Major Creek shall include the primary channel and all headwaters (i.e., tributaries as defined by the City's Riparian and Wetland Assessment, as it exists or may be amended) of those creeks commonly known as Cottonwood Creek, Panther Creek, Parvin Branch, Rowlett Creek, White Rock Creek, and Stewart Creek (See Diagram 8.03-1).

Major Thoroughfare. See *Thoroughfare, Major*.

Maximum. For the purposes of this Ordinance, "the maximum" is the amount that is required by this ordinance of a developer but a developer may choose to construct or provide less than the maximum, unless otherwise specified.

Metes and Bounds. A method of describing the boundaries of land by directions and distances from a known point of reference.

Minimum. For the purposes of this Ordinance, "the minimum" is the amount that is required of a developer but a developer may choose to construct or provide additionally above the minimum required, unless otherwise specified.

Minor Plat. See *Plat, Minor*.

Minor Thoroughfare. See *Thoroughfare, Minor*.

MS4. The acronym for the City's Municipal Separate Storm Sewer System.

Off-Site. Any premises not located within the area of the property to be subdivided, whether or not in common ownership with the applicant submitting an application.

Official Filing Date. The date an application is deemed complete by the responsible official in the manner prescribed by Section 3.03 of this Subdivision Ordinance.

Open Space. Any land parcel or natural area that is set aside, dedicated, designated or reserved for public use and enjoyment, or for private use and enjoyment of owners and occupants of the land adjoining or neighboring such open space area. Open Space shall have no dimension less than fifty feet (50') in any direction, and shall not include remnant property unless it is noted for thoroughfare screening or natural areas where the topography is not impacted, in which case it may be less than fifty feet (50') in width.

Ordinance (also referred to as "this Ordinance"). Refers to this Subdivision Ordinance of the City, as may be amended in the future.

Park or Playground. An area developed for active or passive play and recreation that includes open space, sports courts or fields, play equipment, and trails.

Parks, Recreation & Open Space Master Plan. The City's officially adopted Plan which includes policies in graphic and text form; such policies govern the future development of the City's parks, recreation and open space system.

Pedestrian Access. A specifically designated place, path, means, or way by which pedestrians shall be provided safe, adequate, and usable circulation through the interior of a property or development.

Permit. A license, certificate, approval, registration, consent, permit, contract or other agreement for the construction or provision of service from a utility owned, operated, or controlled by the City, or other form of authorization required by law, rule, regulation, order, or ordinance, which has been approved by the City, that a person or entity must obtain to perform an action or initiate, continue, or complete a project for which the permit is sought, and for which the application for the permit or information required to be submitted for consideration provides notice of the project to the City.

Planning & Zoning Commission. A decision-making body appointed by the City Council which is responsible for subdivision approval, as permitted by State law, and which has any other authority conferred upon it by the City Charter, this Ordinance, or other regulation of the City.

Plat. A plan which shows the exact layout and proposed construction of a proposed development into one or more lots, blocks, streets, parks, school sites, easements, alleys and/or any other elements as required by this Ordinance, including any engineering or construction standards for related improvements, and which conforms to all requirements of this Ordinance and any other applicable City ordinance, and which is subject to approval by the Planning & Zoning Commission, unless otherwise specified.

Plat, Amending. A plat with minor changes to a recorded subdivision as itemized and authorized in Section 4.08 of this Ordinance.

Plat, Conveyance. A plat which conforms to Section 4.04 of this Subdivision Ordinance and is used solely for the purpose of subdividing land and the recording of same, or recording a single existing lot or parcel created by other means. Such plat is used to convey the property or interests therein and is for property intended for immediate development. A Conveyance Plat is an interim step in the subdivision and development of land.

Plat, Final. A plat which conforms to Section 4.03 of this Subdivision Ordinance and is submitted to the City for consideration for final approval by the Planning & Zoning Commission. The plat illustrates that the subdivision of land is consistent with all standards of this Subdivision Ordinance pertaining to the adequacy of public facilities and the installation of or provision for public improvements. Once approved, such plat is submitted to the County Clerk of Collin or Denton County, as applicable, for recording.

Plat, Minor. A plat dividing land into no more than four (4) lots that meets the submission and approval requirements of Section 4.05 of this Ordinance. Such plat may be approved by the Director of Development Services. Such plat is also considered a Final Plat.

Plat, Preliminary. A plat which conforms to Section 4.02 of this Subdivision Ordinance and is submitted to the City for consideration for initial approval by the Planning & Zoning Commission. Such plat is not to be recorded, but illustrates the general layout of a proposed subdivision, the adequacy of public facilities needed to serve the proposed subdivision, and the overall compliance of the applicable requirements of this Ordinance. Such plat is reviewed and decided prior to approval of a Final Plat.

Private Street. See *Street, Private*.

Private Utility. See *Utility, Private*.

Progress (Towards Completion). Shall have the same meaning set forth in Section 245.005(c) of the Texas Local Government Code, as it exists or may be amended, unless another meaning is specified.

Project. An endeavor over which the City exerts its jurisdiction and for which more than one permit is required to initiate, continue, or complete the endeavor.

Property Owner. The legally recognized proprietor of the land for which an application is being submitted. Also see *Developer*.

Proportionality/Proportional Share. The developer's portion of the costs of an exaction or public improvement as determined and in accordance with Texas Local Government Code 212.904 and considered to be the "roughly proportional share" of such exaction or public improvement that is created by a proposed development or subdivision.

Public Improvement. See *Improvement, Public*.

Public Way. An officially approved, privately maintained street, constructed to City street standards, open to unrestricted and irrevocable public access, serving two (2) or more lots that provides the primary means of access and providing fire lane and utility easements.

Rear Lot Line. See *Lot Line, Rear*.

Record Drawings. A group of drawings or plans that depicts the final configuration of the installed or constructed improvements of a development, improvements which have been verified by the contractor as their installation or construction occurs during development. The record drawings shall reflect the construction plans (or working drawings) used, corrected, and/or clarified in the field.

Replat. The re-subdivision of any or part or all of any block or blocks of a previously platted subdivision, addition, lot or tract, that is beyond the definition of an Amending Plat and which does not require the vacation of the entire preceding plat. Such plat also conforms to Section 4.07 of this Subdivision Ordinance. A Replat can function as a Final Plat for a property.

Responsible Official. The City staff person who has been designated by the City Manager to perform one (1) or more of the following tasks (this term also includes designees):

(a) Accept an application for filing;

(b) Review and make recommendations concerning such application;

(c) Where authorized, to initially decide such applications;

(d) Initiate enforcement actions;

(e) Take all other actions necessary for administration of the provisions of this Subdivision Ordinance with respect to such application.

Right-of-Way. A use of land dedicated by plat or metes and bounds to and for use by the public, which is separate and distinct from the lots and parcel abutting it, and which is not included within the dimensions or areas of such lots or parcels. Generally describes an area used for the provision of streets and utilities. Unless otherwise specified, the term *right-of-way* shall refer to a public right-of-way.

Riparian Study. An ecologically based study that addresses the three major components of a stream (channel, floodplain and transitional upland fringe).

Road, or Roadway. See *Street*.

Screening. A barrier intended to separate and limit visibility between that which is on either side of the barrier, for example, a thoroughfare and adjacent land uses.

Side Lot Line. See *Lot Line, Side*.

Street. An access way for vehicular traffic and other public uses, whether designated a street, highway, thoroughfare, parkway, throughway, road, avenue, boulevard, lane, place or however otherwise designated. An alley is not considered a street.

Street, Improved. A street that has been constructed or reconstructed to meet the City's minimum standards regarding right-of-way width, pavement width, and/or pavement type, as defined in the *Engineering Standards*.

Street, Private. A privately owned street within a subdivision for which the private owners assume full responsibility for maintenance and control and which has not been dedicated to the use of the public. This term is inclusive of related alleys.

Street, Stub. A street that has been designed to allow for the future extension of the street through subsequent subdivisions.

Street, Substandard. An existing street that does not meet the current minimum street standards of the City.

Street, Unimproved. A street that does not meet the City's minimum standards regarding right-of-way width, pavement width, and/or pavement type, as defined in the *Engineering Standards*. Most unimproved streets are former country roads that were built before an area was annexed into the City limits and/or before the City implemented thoroughfare design standards.

Subdivide.

(a) Is the following when done for the purpose of sale, conveyance, or development:

i. The division of any tract of land into two (2) or more tracts or lots; or

ii. The assembly of two (2) or more tracts of land into one tract or lot.

(b) Is the following with regard to changes to a recorded subdivision plat:

i. A resubdivision of all or part of the subdivision;

ii. Any change of lot size or lot lines; or

iii. The relocation of any street.

Subdivider. See *Developer*.

Subdivision. The division of a tract or parcel of land into two or more parts or lots for the purpose, whether immediate or future, of sale or building development or transfer of ownership with the exception of transfer to heirs of an estate, and shall include re-subdivision.

Submission. The date an applicant delivers an application or petition under this Ordinance to the Director of the applicable City Department, or the date on which an applicant deposits an application or petition with the United States Postal Service by certified mail addressed to the Director of the applicable City Department, along with all required fees and documents.

Substandard. A condition of a road or other public improvement that does not meet the City's current right-of-way, design, capacity or construction standard(s).

Surety. A bond, letter of credit, or letter of financial guarantee from a financial institution.

TCEQ. The acronym for the Texas Commission on Environmental Quality.

Thoroughfare. A general term for a street (see Street), which has a more specific meaning when used in conjunction with a class distinction, such as Major, Minor, Type A, Type B, etc. Each class provides a certain degree of continuity, capacity and accessibility to adjacent land uses.

Thoroughfare, Major. An arterial street designed to accommodate cross-City traffic movement, distributing traffic to and from minor thoroughfares and collector streets. Major Thoroughfares are divided roadways that typically have an ultimate width of six lanes. Such streets shall also be as described within the *Engineering Standards*, and as shown on the Thoroughfare Plan Map. Also is referred to as a Type A Thoroughfare.

Thoroughfare, Minor. An arterial street designed to accommodate neighborhood-to-neighborhood (intra-City) traffic movement, distributing traffic to and from collector streets. Minor Thoroughfares are divided roadways that typically have an ultimate width of four lanes. Such streets shall also be as described within the *Engineering Standards*, and as shown on the Thoroughfare Plan Map. Also is referred to as a Type B Thoroughfare.

Thoroughfare Plan Map. A component of the Comprehensive Plan that generally represents the proposed grid-system of major and minor thoroughfares that will support the Future Land Use Plan. The exact locations of future roadways cannot be determined without engineering and environmental analysis, but the Map should be used as a guide as development occurs in terms of how connections should be made and by what type of thoroughfare. The Thoroughfare Plan Map also shows existing railroads and proposed transit rail stations.

Thoroughfare Screening. Screening (see definition), both landscaping and screening walls/fences, between lots/subdivisions and major thoroughfares as required by Section 8.06 of this Ordinance.

Tributary. A riparian branch that feeds (i.e., flows into) a Major Creek, as identified and defined in the City's Riparian Study, as amended.

TxDOT: The acronym for the Texas Department of Transportation.

Type A Thoroughfare. See *Thoroughfare, Major*.

Type B Thoroughfare. See *Thoroughfare, Minor*.

Type C Thoroughfare. See *Collector Street*.

Type D Thoroughfare. See *Collector Street*.

Type E Thoroughfare. See *Local Street*.

Type F Thoroughfare. See *Local Street*.

Type G Thoroughfare. See *Local Street.*

Utility, Private. Services, and any related facilities (e.g., distribution lines), not customarily provided by the City or public entities; such services generally include electricity, natural gas, and telecommunications.

Utility, Public. Services, and any related facilities (e.g., distribution lines), typically provided by the City, County, or publicly owned entity; such services include potable water distribution, wastewater collection, and storm water management.

Variance. As defined in the Zoning Ordinance.

Vegetative Study. A study in which the main purpose is identification and consideration of unique vegetative communities that are important for conserving biotic diversity and are rare due to conversion to other land uses.

Vested Right. A right of an applicant in accordance with Chapter 245 of the Texas Local Government Code, as amended, requiring the City to review and decide the application under standards in effect prior to the effective date of the standards of this Chapter and/or of any subsequent amendments.

Vested Rights Petition. A request for relief from any standard or requirement of this Subdivision Ordinance based on an assertion that the applicant (petitioner for relief) has acquired a vested right. Such petition is regulated under Section 9.03 of this Ordinance.

Violation. Any failure to fully comply with this Subdivision Ordinance.

Waiver, Major (Major Waiver). A significant change to both the standards and intent of this Subdivision Ordinance, which involves Planning & Zoning Commission approval. A Major Waiver includes any type of waiver that is not specifically listed in Table 9.01-1.

Waiver, Minor (Minor Waiver). A minor change to the standards, but not the intent, of this Subdivision Ordinance, which involves Director of Development Services or Director of Engineering Services (as applicable) approval unless otherwise noted. An exclusive list of Minor Waivers is shown in Table 9.01-1.

Wetland. An area that is inundated or saturated by surface or groundwater at a frequency and duration sufficient to support, and under normal circumstances do support, a prevalence of vegetation typically adapted for life in saturated soil conditions.

Wetland Delineation Study. A study in which the main purposes are to determine jurisdictional wetlands and to ensure compliance with Section 404 of the Clean Water Act and other applicable regulations of the U.S. Army Corps of Engineers.

Zoning Ordinance. The City of Frisco *Zoning Ordinance*.

SECTION 11: AMENDMENTS; FEES; VIOLATIONS; CONFLICTS

SECTION 11.01 AMENDMENTS

The Commission or City Council by majority vote may initiate changes to the Subdivision Ordinance through a call for public hearing. The case to consider amending the Subdivision Ordinance is considered in a public hearing by the Commission which will make a recommendation to City Council. City Council will consider the Commission's recommendation at a public hearing, upon which the City Council will make a decision whether to direct staff to prepare an Ordinance amending the Subdivision Ordinance.

SECTION 11.02 FILING FEES & CHARGES

(a) General. Fees shall be paid to the City when any application authorized by this Ordinance is submitted to Development Services. Each of the fees, as provided in Section 11.02(b), shall be paid in advance, and no action of the Commission, the City Council, or any other City board or commission shall be valid until all required fees have been paid. Fees paid for the review and consideration of plats and applications under this Ordinance are non-refundable.

(b) Calculations & Charges. Fees and charges shall be calculated in accordance with the following.

(1) All fees shall be as established by City ordinance.

(2) These fees shall be charged on all plats and applications authorized by this Ordinance, regardless of the action taken by the decision-making authority and of whether the application is approved, denied or closed.

(This page intentionally left blank.)

Appendix – Diagrams & Tables

(This page intentionally left blank.)

Table 2.01-1: Responsible Officials, Initial Decision-Makers & Appellate Decision-Makers

Type of Application or Petition	Responsible City Official	Initial Decision-Maker	Appellate Decision-Maker	Further Appeal
Waiver of Right to 30-Day Action *Section 3.03(e)*	Director of Development Services	n/a	n/a	n/a
Extension of Plat Approval *Section 4.02(j)*	Director of Development Services	Director of Development Services	Planning & Zoning Commission	City Council
Preliminary Plat *Section 4.02*	Director of Development Services	Planning & Zoning Commission	City Council	n/a
Final Plat *Section 4.03*	Director of Development Services	Planning & Zoning Commission	City Council	n/a
Conveyance Plat *Section 4.04*	Director of Development Services	Planning & Zoning Commission	City Council	n/a
Minor Plat *Section 4.05*	Director of Development Services	Director of Development Services	Planning & Zoning Commission	City Council
Replat *Section 4.07*	Director of Development Services	Planning & Zoning Commission	City Council	n/a
Amending Plat *Section 4.08*	Director of Development Services	Director of Development Services	Planning & Zoning Commission	City Council
Plat Vacation *Section 4.09*	Director of Development Services	City Council	n/a	n/a
Construction Plans *Section 5.01*	Director of Engineering Services	Director of Engineering Services	n/a	n/a
Extension of Construction Plans Approval *Section 5.01(h)*	Director of Engineering Services	Director of Engineering Services	n/a	n/a
Construction Release *Section 5.01(i)*	Director of Engineering Services	Director of Engineering Services	n/a	n/a
Improvement Agreement *Section 5.04*	Director of Engineering Services	Director of Engineering Services	City Council	n/a

Type of Application or Petition	Responsible City Official	Initial Decision-Maker	Appellate Decision-Maker	Further Appeal
Minor Waiver *Section 9.01*	Director of Development Services *--or--* Director of Engineering Services (as applicable)	Director of Development Services *--or--* Director of Engineering Services (as applicable – see Table 9.01-1)	Planning & Zoning Commission (requires 4 votes to overrule initial decision)	City Council (requires 4 votes to overrule initial appeal decision)
Major Waiver *Section 9.01*	Director of Development Services *--or--* Director of Engineering Services (as applicable)	Planning & Zoning Commission *--or--* City Council (as applicable)	Planning & Zoning Commission *--or--* City Council (as applicable; requires 4 votes to overrule initial decision)	City Council (requires 4 votes to overrule initial appeal decision)
Proportionality Appeal *Section 9.02*	Director of Engineering Services	City Council (with recommendation from Planning & Zoning Commission)	City Council (requires 4 votes to overrule initial decision)	n/a
Vested Rights Petition *Section 9.03*	Director of Development Services *--or--* Director of Engineering Services (as applicable)	Director of Development Services *--or--* Director of Engineering Services *--or--* Planning & Zoning Commission (as applicable)	City Council	n/a

Diagram 8.01-1: Median & Cross Access

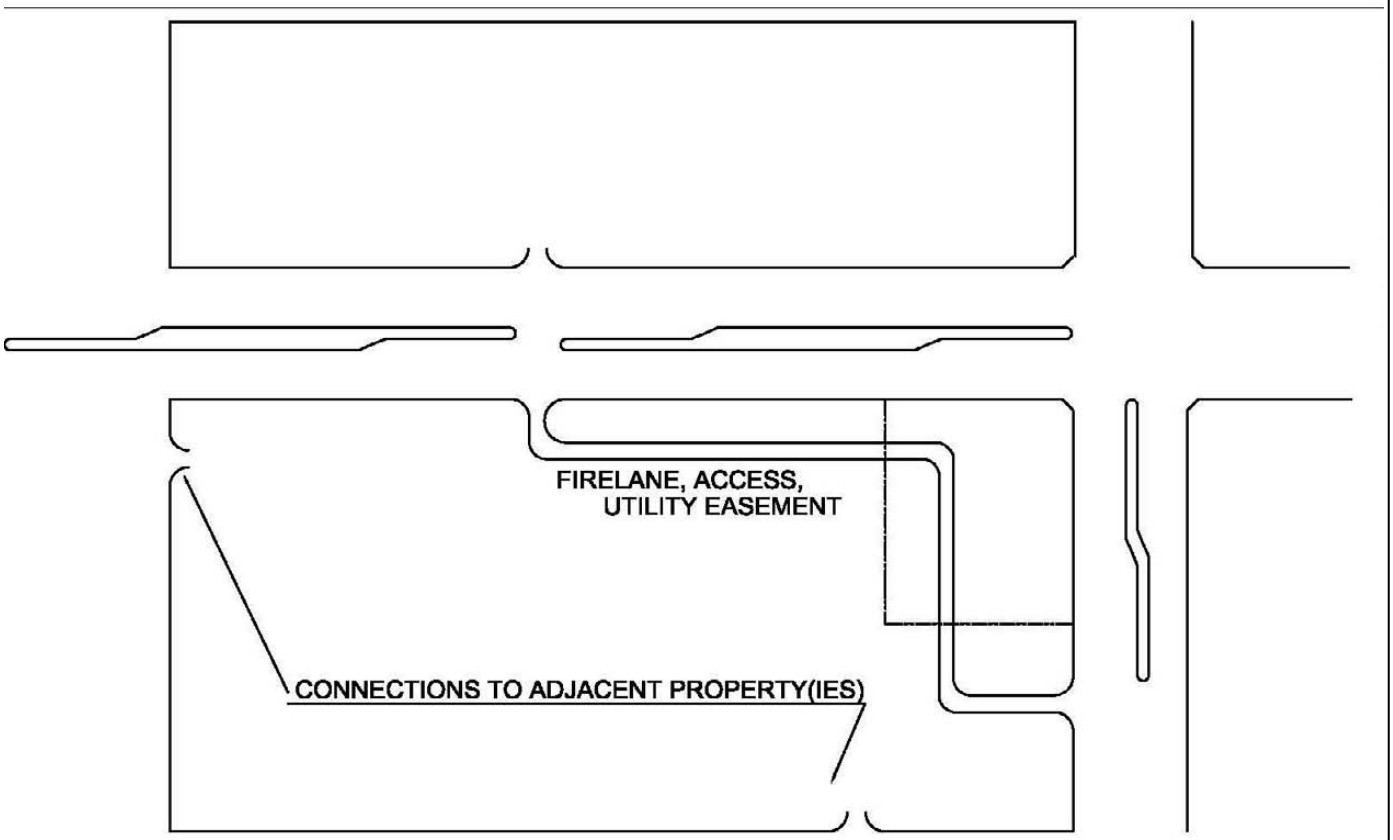

Diagram 8.03-1: Major Creeks – Map

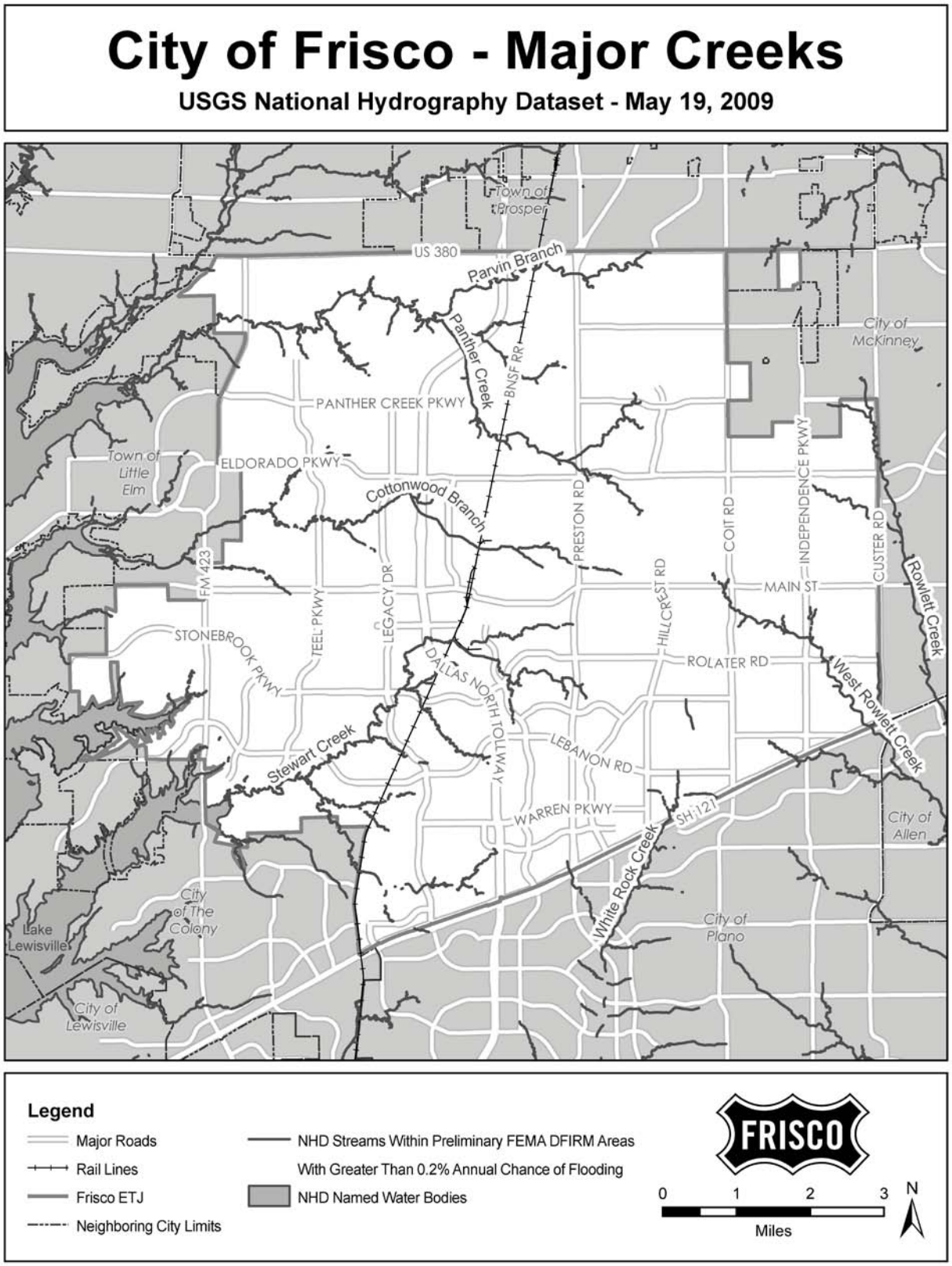

Diagram 8.03-2: Major Creek – Cross Section

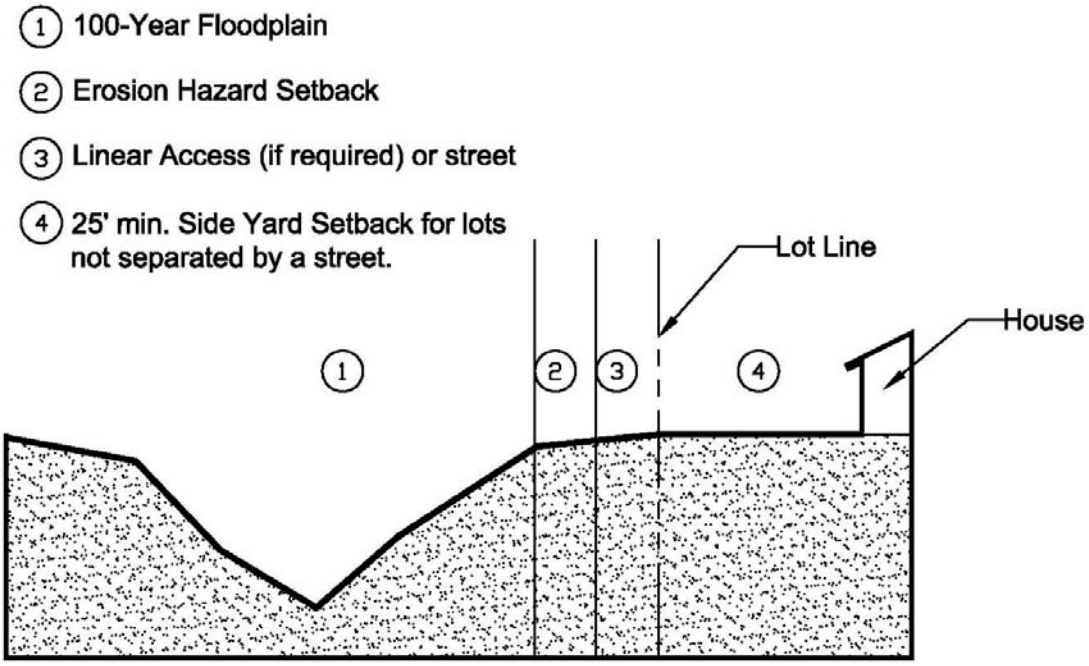

Diagram 8.03-3: Streets Adjacent to Major Creeks

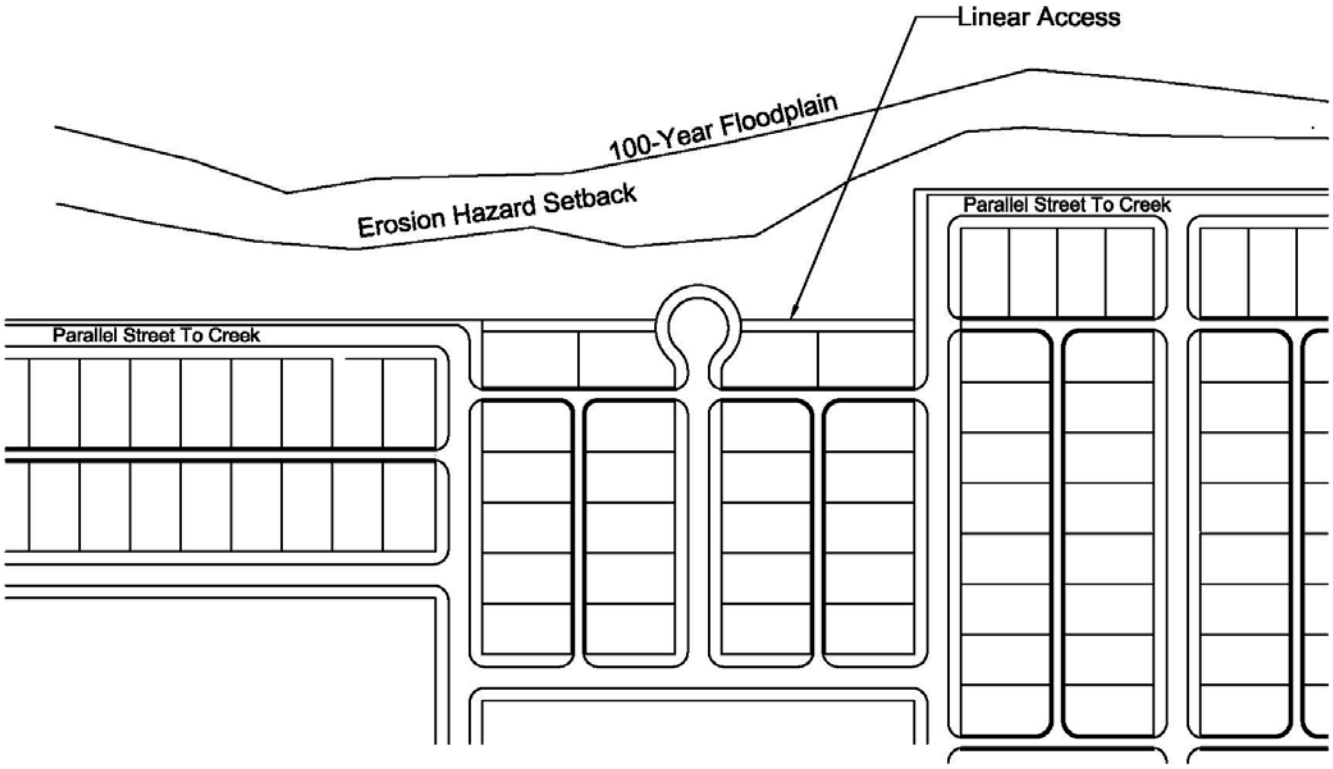

Diagram 8.03-4: Cul-de-Sacs Adjacent to Major Creeks

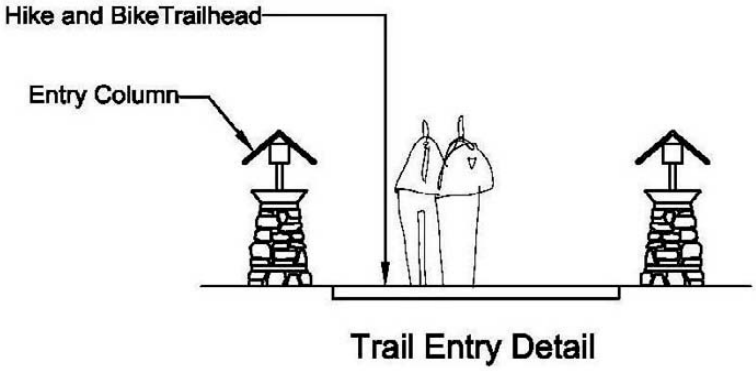

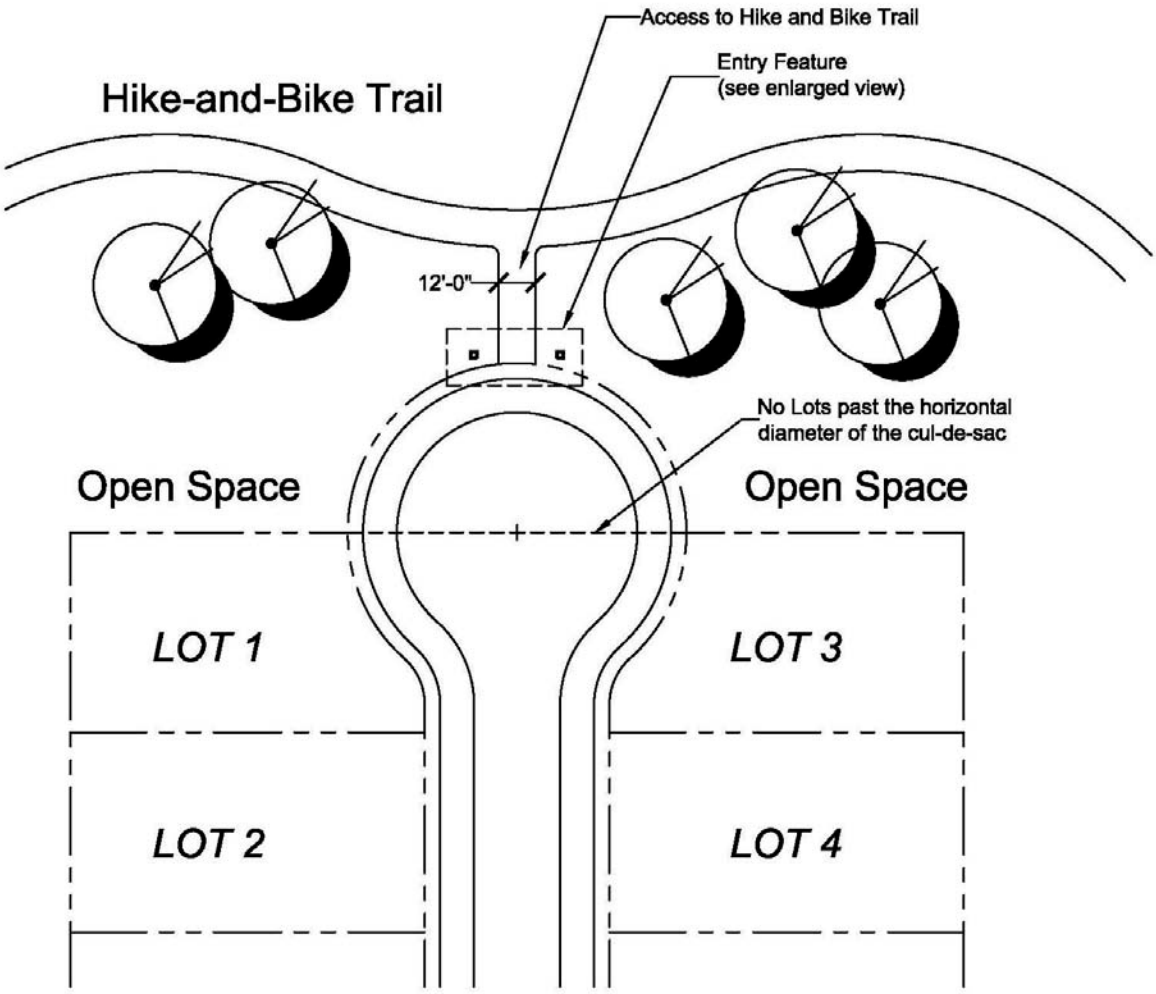

Diagram 8.03-5: Fencing Options for Lots Abutting Major Creeks

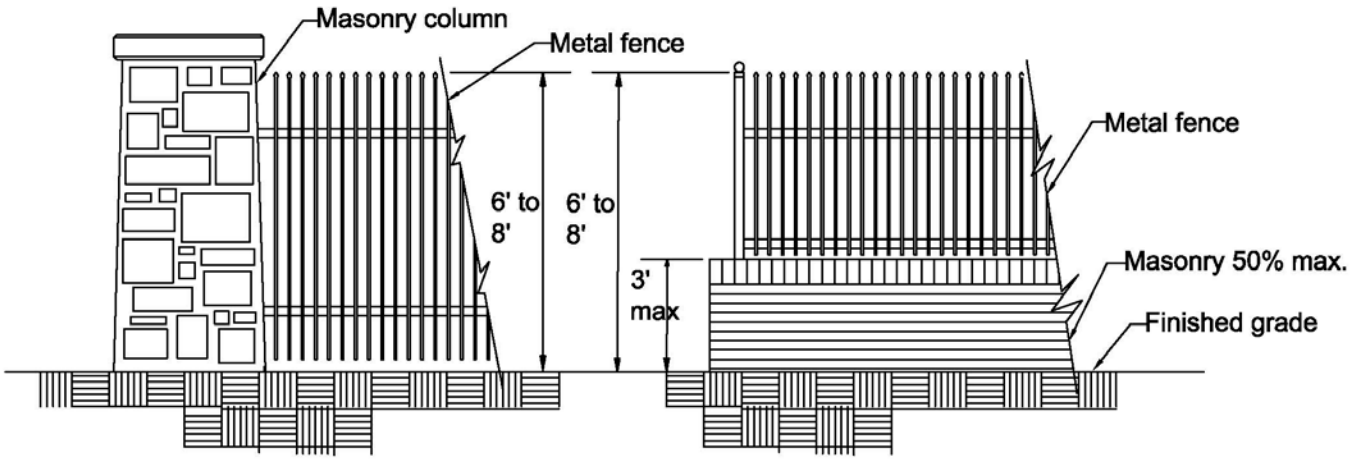

Table 8.06-1: Thoroughfare Screening Options

Thoroughfare Screening Option	Landscape Edge (minimum width)	Screening Wall/Fence Type	Trees/ Frontage (3" cal. min.)	Shrub Screen	Berms
Option 1 (Lots that back or side to the Thoroughfare) *Diagram 8.06-1*	Type A or B Thoroughfare: 10' Type C or D Thoroughfare: 15'	Continuous min. 6' ht. solid masonry wall (max. 8' ht.) (can be "staggered" or offset with landscape plantings)	One 3" cal. tree per 30' frontage	Not required	Not required (max. slope 3:1 if used)
Option 2 (Lots that are separated from the Thoroughfare by an alley) *Diagram 8.06-2(a), 8.06-2(b), 8.06-2(c)*	Type A or B Thoroughfare: 10' Type C or D Thoroughfare: 15'	(a) Continuous min. 4' ht. (max. 8' ht.) solid masonry wall with min. 6' ht. solid evergreen shrub screen, or (b) Continuous min. 4' ht. (max. 8' ht.) ornamental metal fence with min. 6' ht. solid evergreen shrub screen, or (c) Continuous min. 6' ht. (max. 8' ht.) solid masonry wall (no shrub screen required)	One 3" cal. tree per 30' frontage	Min. 6' ht. solid evergreen shrub screen at time of planting (not required if 6'-8' solid masonry wall is used)	Not required (max. slope 3:1 if used)
Option 3 (Lots that back or side to or are separated by an alley from the Thoroughfare) *Diagram 8.06-3*	Type A, B, C or D Thoroughfare: 25'	Min. 4' ht. (max. 6' ht.) ornamental metal fence	One 3" cal. tree per 30' frontage	Min. 6' ht. solid evergreen shrub screen at time of planting	Not required (max. slope 3:1 if used)
Option 4 (Required to be used at the bulb portion of a cul-de-sac where the cul-de-sac lots side onto an adjacent street) *Diagram 8.06-4(a), 8.06-4(b)*	Type A or B Thoroughfare: 10' Type C or D Thoroughfare: 15' Type E, F or G Thoroughfare: Not required (10' separation between rights-of-way is required)	All Types of Thoroughfares: A sidewalk centered on the common property line connecting the cul-de-sac sidewalk and adjacent street sidewalk through an opening in the fence/wall Type A, B, C & D Thoroughfares: See Screening for Options 1, 2, or 3 Type E, F, or G Thoroughfares: Continuous 4'-8' ht. ornamental metal fence (cannot exceed ht. of adjacent/connecting walls or fences).	Six (6) 3" cal. trees evenly spaced within 150' centered on the common property line.	Min. 3' ht. evergreen shrub screen at time of planting, planted at approximately 5' on center within a distance of 150' centered on the common property line.	Not required (max. slope 3:1 if used)

Diagram 8.06-1: Thoroughfare Screening Option 1

Ⓐ Right-of-Way (R.O.W.)

Ⓑ Landscape Edge -
Type A or B Thoroughfare = 10ft.
Type C or D Thoroughfare = 15ft.

Ⓒ 5ft. Wall Maintenance Easement (WME)

Ⓓ Continuous 6ft. to 8ft. Solid Masonry Wall (can be "staggered" or off-set with landscape plantings). Columns 9ft. max with capstones.

Ⓔ One 3 inch caliper tree per 30ft. of frontage.

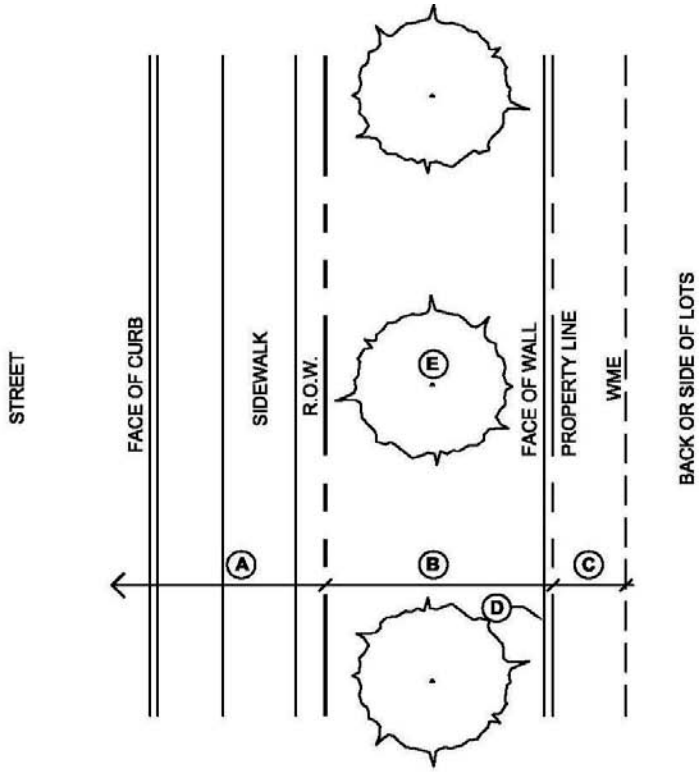

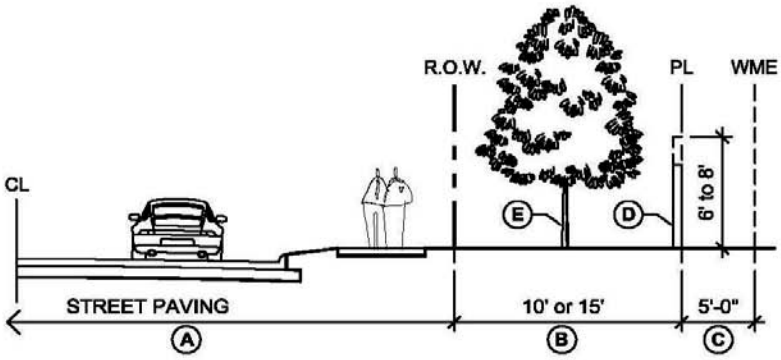

OPTION 1

Diagram 8.06-2(a): Thoroughfare Screening Option 2(a)

Ⓐ Right-of-Way (R.O.W.)

Ⓑ Landscape Edge -
Type A or B Thoroughfare = 10ft.
Type C or D Thoroughfare = 15ft.

Ⓒ Continuous 4ft. to 8ft. Solid Masonry Wall. Columns 9ft. max with capstones.

Ⓓ One 3 inch caliper tree per 30ft. of frontage.

Ⓔ 6ft. high solid evergreen shrub screen at time of planting (not required with 6'-8' masonry wall).

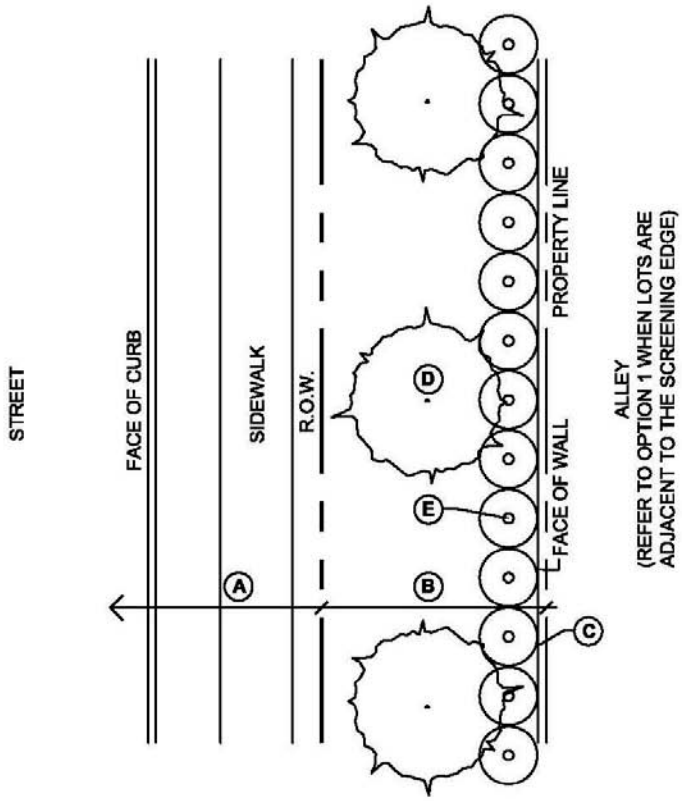

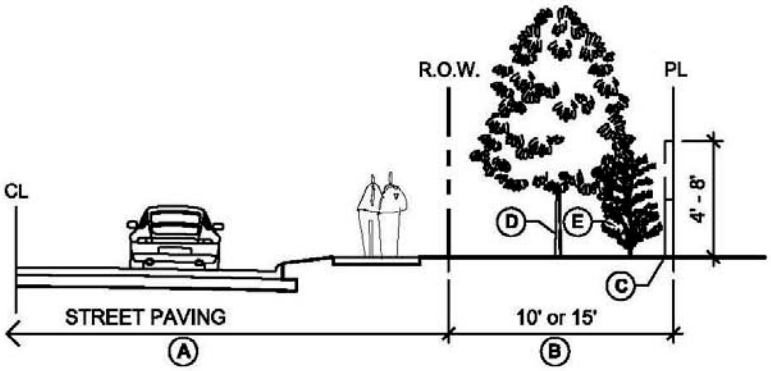

OPTION 2a

Diagram 8.06-2(b): Thoroughfare Screening Option 2(b)

Ⓐ Right-of-Way (R.O.W.)

Ⓑ Landscape Edge -
Type A or B Thoroughfare = 10ft.
Type C or D Thoroughfare = 15ft.

Ⓒ Continuous 4ft. to 8ft. Ornamental Metal Fence. Columns 9ft. max with capstones.

Ⓓ One 3 inch caliper tree per 30ft. of frontage.

Ⓔ 6ft. high solid evergreen shrub screen at time of planting.

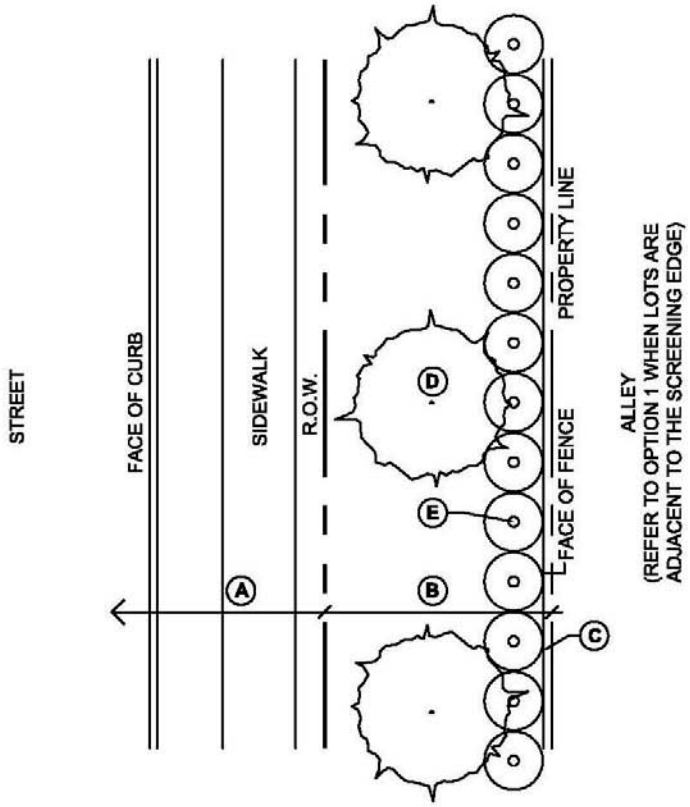

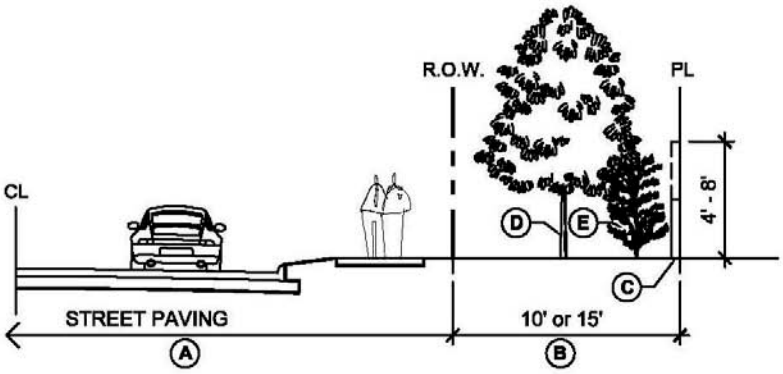

OPTION 2b

Diagram 8.06-2(c): Thoroughfare Screening Option 2(c)

Ⓐ Right-of-Way (R.O.W.)

Ⓑ Landscape Edge -
Type A or B Thoroughfare = 10ft.
Type C or D Thoroughfare = 15ft.

Ⓒ Continuous 6ft. to 8ft. Solid Masonry Wall (can be "staggered" or off-set with landscape plantings). Columns 9ft. max with capstones.

Ⓓ One 3 inch caliper tree per 30ft. of frontage.

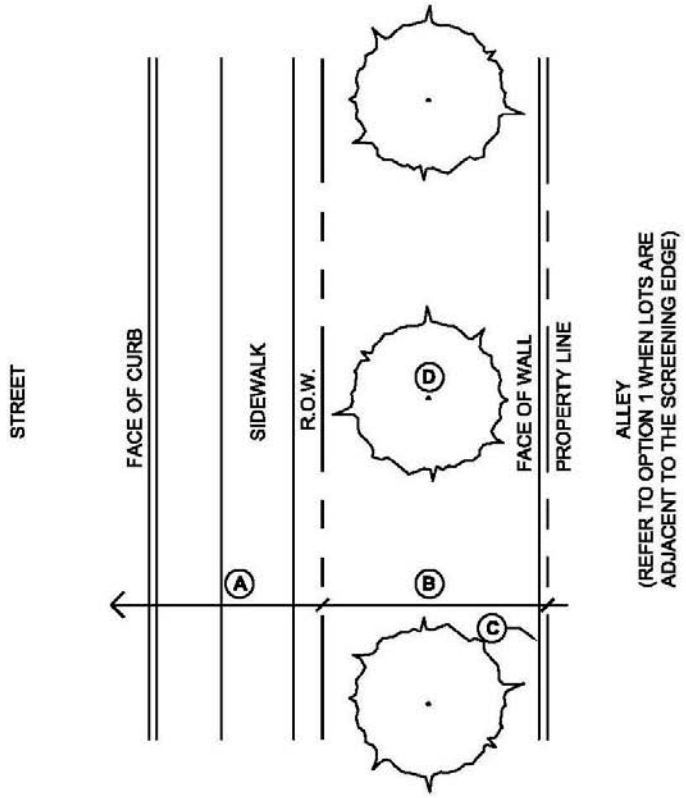

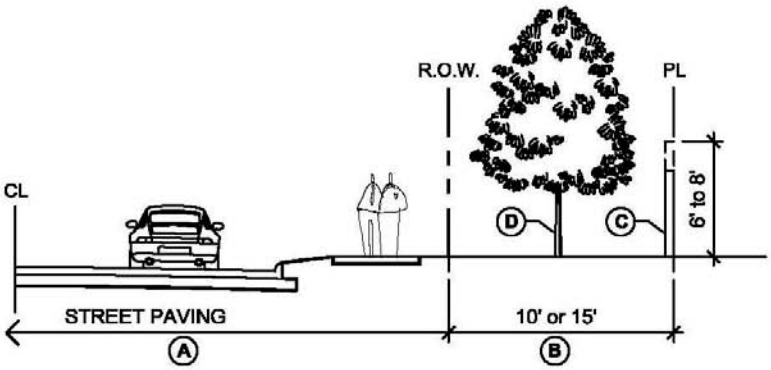

OPTION 2c

Diagram 8.06-3: Thoroughfare Screening Option 3

Ⓐ Right-of-Way (R.O.W.)

Ⓑ Landscape Edge -
Type A, B, C, D Thoroughfares = 25ft.

Ⓒ 5ft. Wall Maintenance Easement (WME)
(Not required if along alley).

Ⓓ Continuous 4ft. to 6ft. Ornamental Metal Fence. Columns 9ft. max with capstones.

Ⓔ One 3 inch caliper tree per 30ft. of frontage.

Ⓕ 6ft. high solid evergreen shrub screen at time of planting.

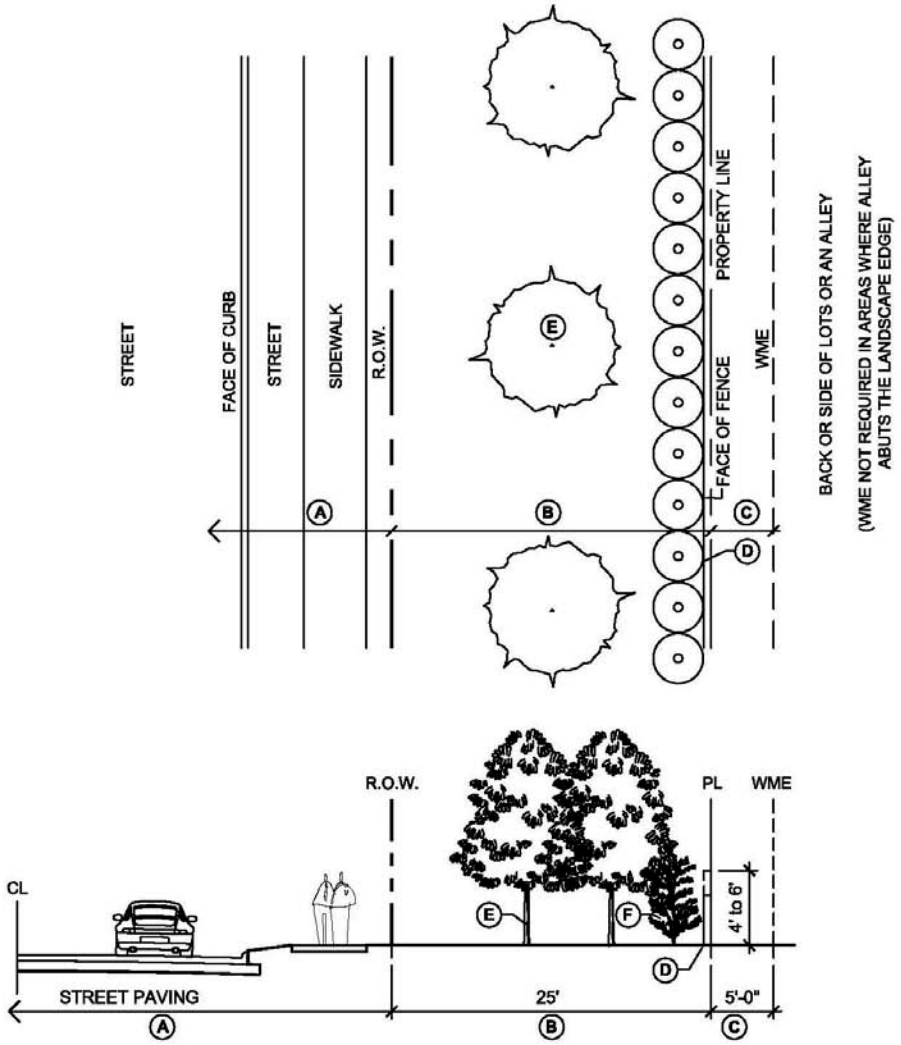

OPTION 3

Diagram 8.06-4(a): Thoroughfare Screening Option 4(a)

Ⓐ Right-of-Way (R.O.W.)

Ⓑ Landscape Edge -
Type A or B Thoroughfare = 10ft.
Type C or D Thoroughfare = 15ft.

Ⓒ 5ft. Wall Maintenance Easement (WME)

*Ⓓ Screening Wall or Fence to comply with Options 1, 2, or 3.

Ⓔ One 3 inch caliper tree per 30ft. frontage.

*Ⓕ Solid evergreen shrub to comply with Options 1, 2, or 3.

Ⓖ 20' Pedestrian Access Easement

Ⓗ Neighborhood Street Tree

* Example:
if choosing (Option 1) for item D
Then
(Option 1) must be chosen for item F.

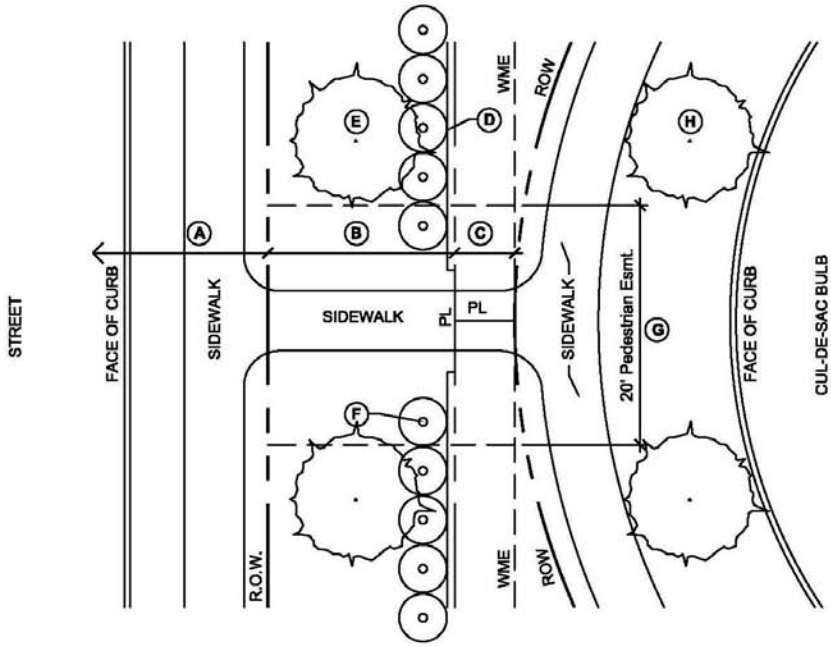

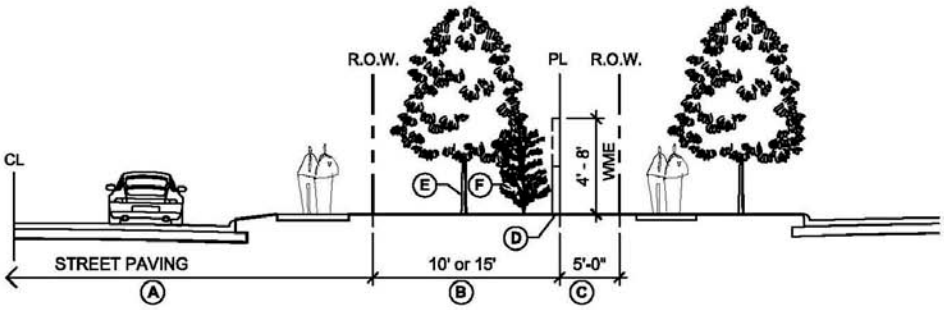

OPTION 4a

Diagram 8.06-4(b): Thoroughfare Screening Option 4(b)

- (A) Right-of-Way (R.O.W.)
- (B) 10ft. Landscape Easement
- (C) 20ft. Pedestrain Access Easement
- (D) Continuous 4ft. to 6ft. Ornamental Metal Fence. Columns 9ft. max with capstones.
- (E) 3ft. high solid evergreen shrub screen at time of planting.
- (F) Six (6) 3in. cal. trees evenly spaced within150 ft. centered on the common property line.
- (G) Neighborhood Street Tree

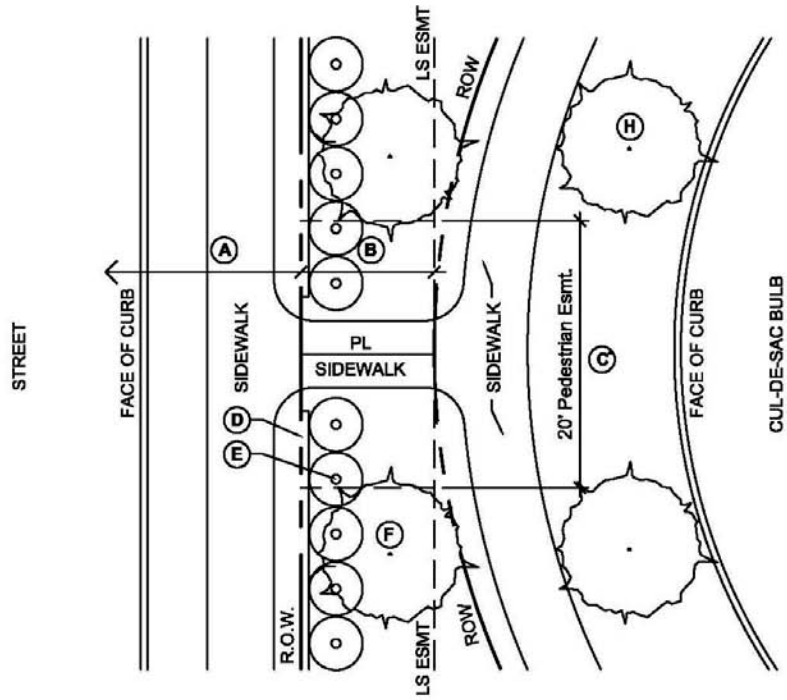

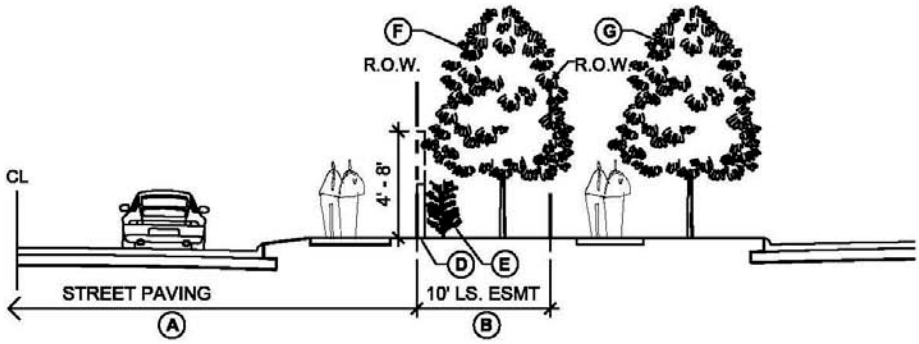

OPTION 4b

Diagram 8.09-1: Flag Lots

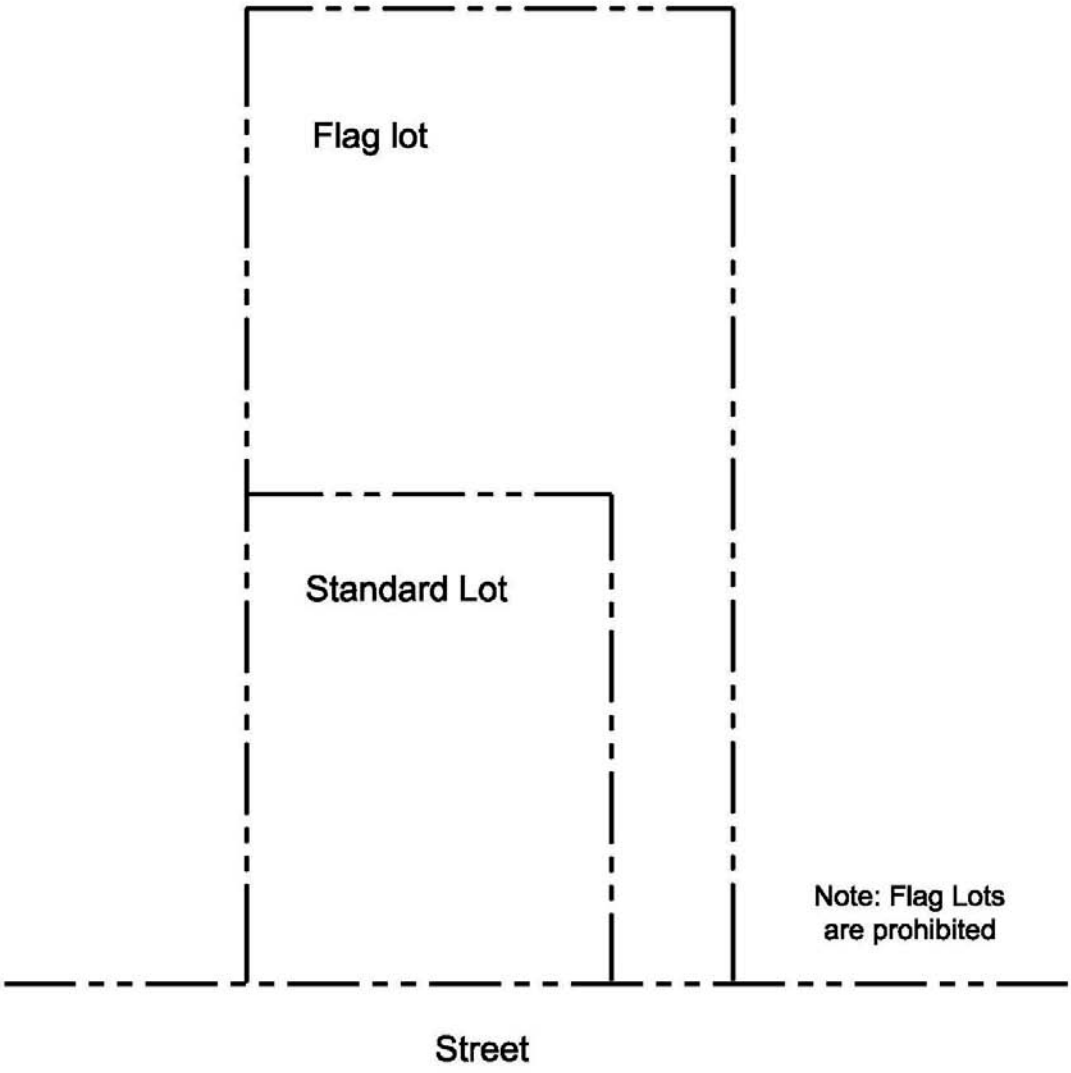

Diagram 8.09-2: Determining Lot Depth on an Irregular-Shaped Lot

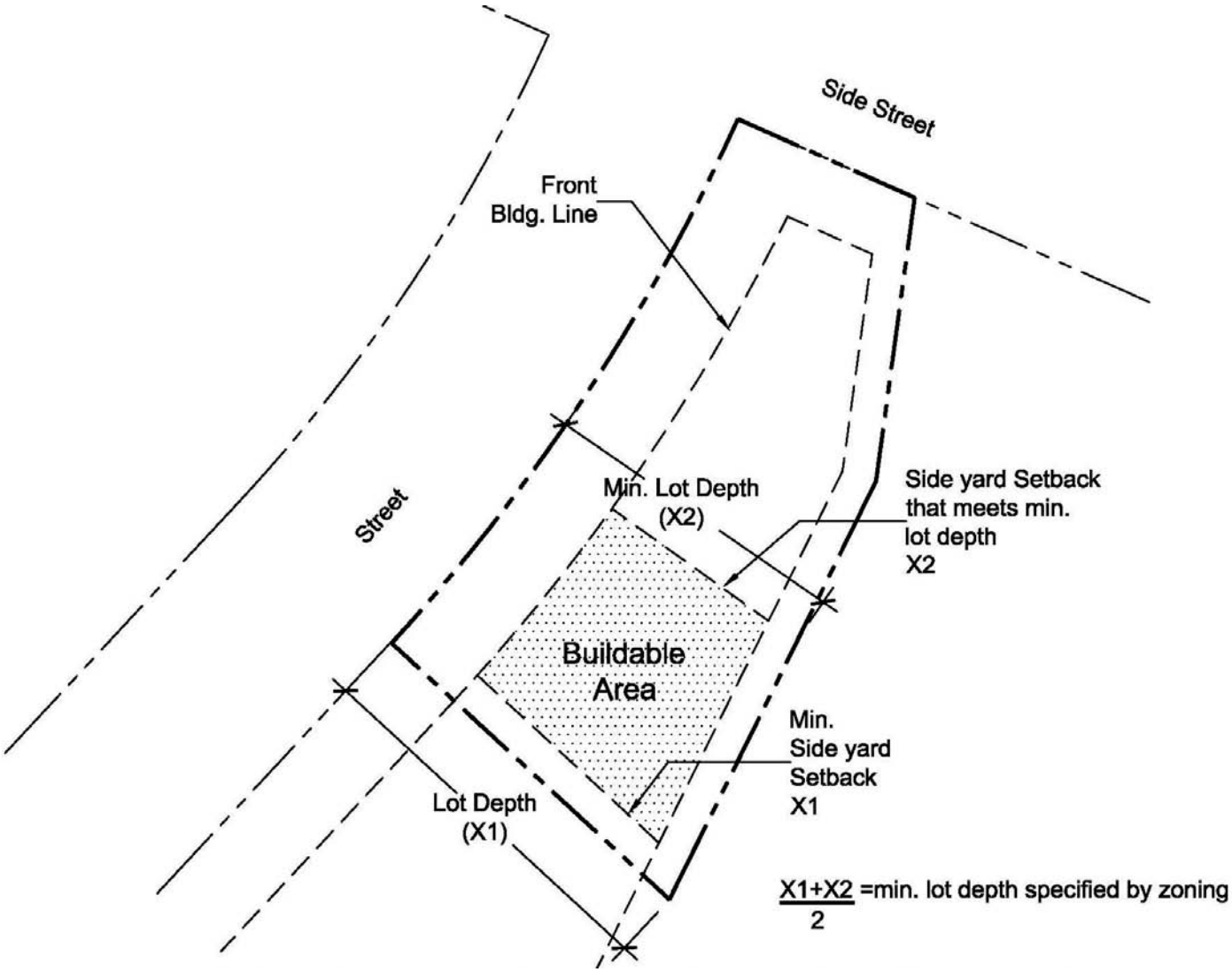

Diagram 8.09-3: Lot Street Frontage – Curved Streets

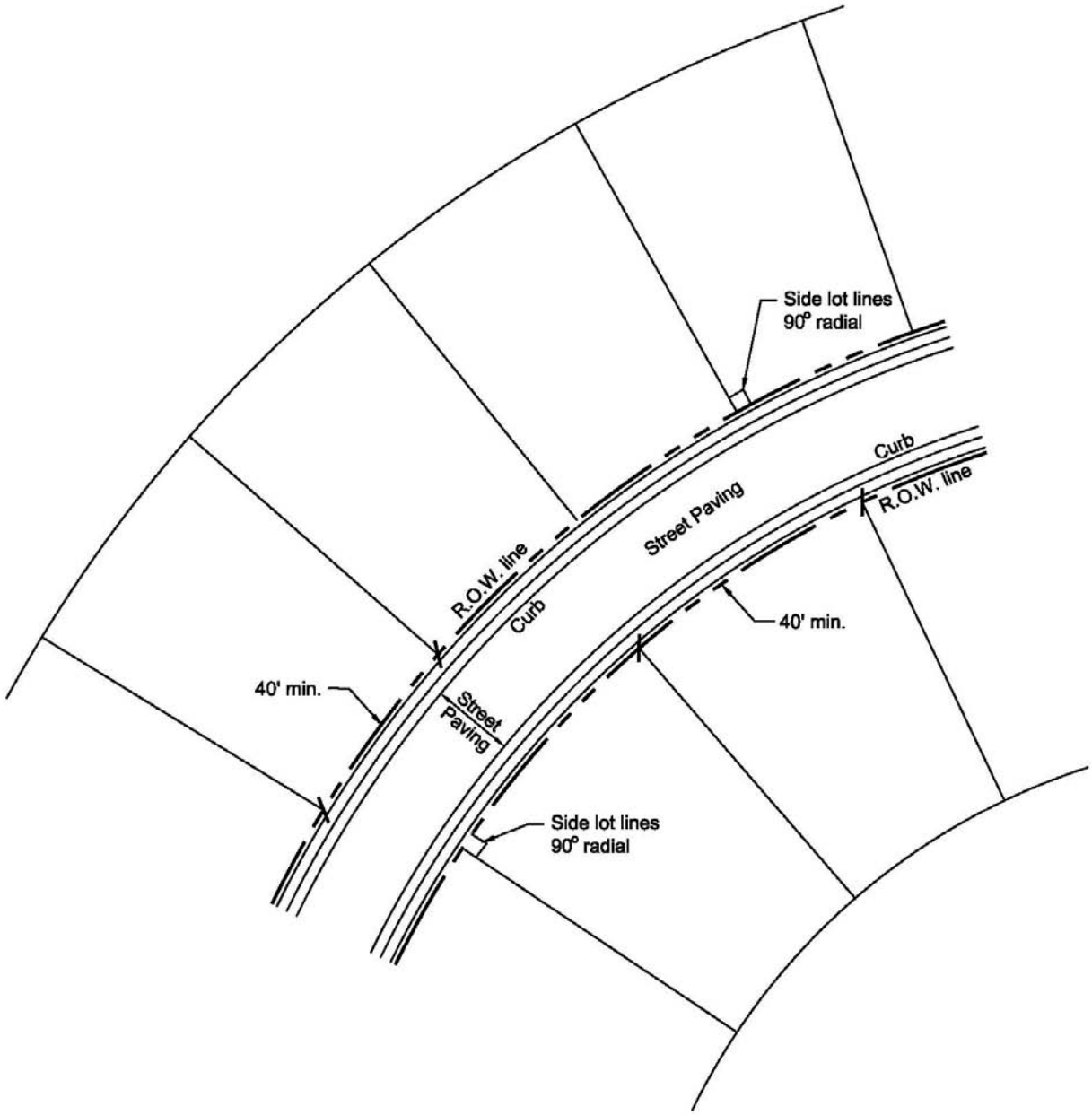

Diagram 8.09-4: Lot Street Frontage – Cul-de-Sac & Eyebrow Lots

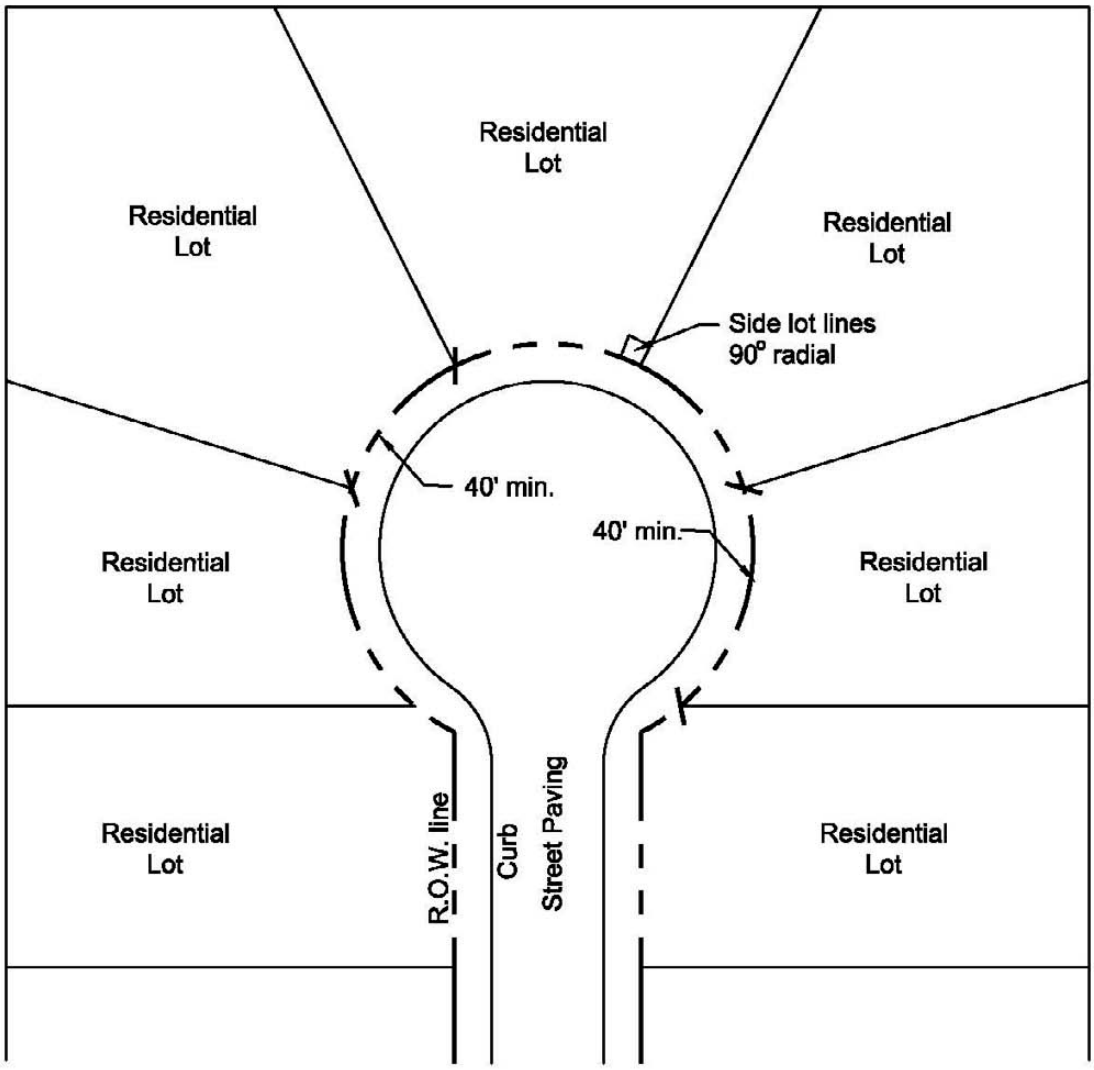

Diagram 8.10-1: Centrally Located Amenity Center

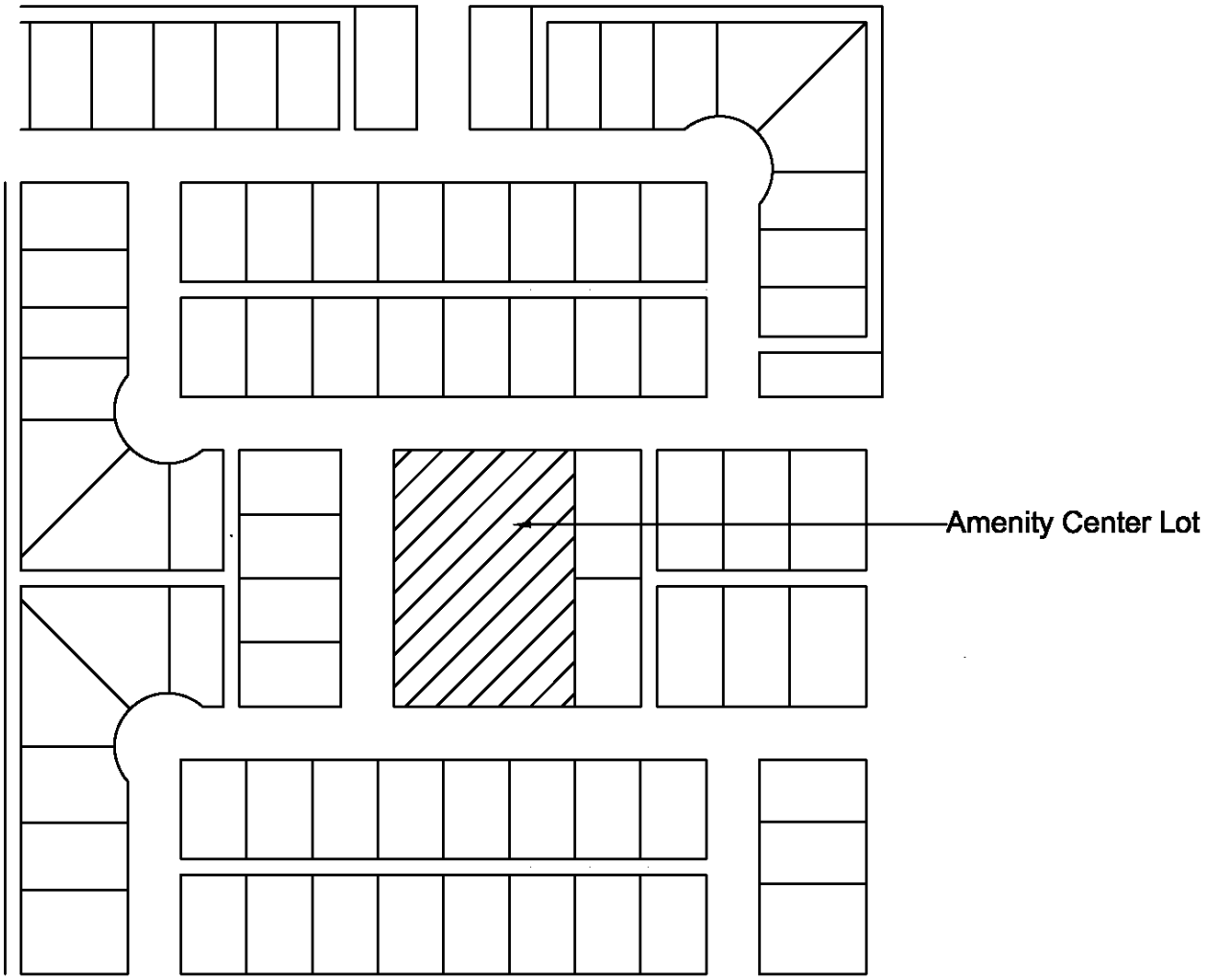

Diagram 8.12-1: Access & Lot Orientation to Parks and/or Open Space

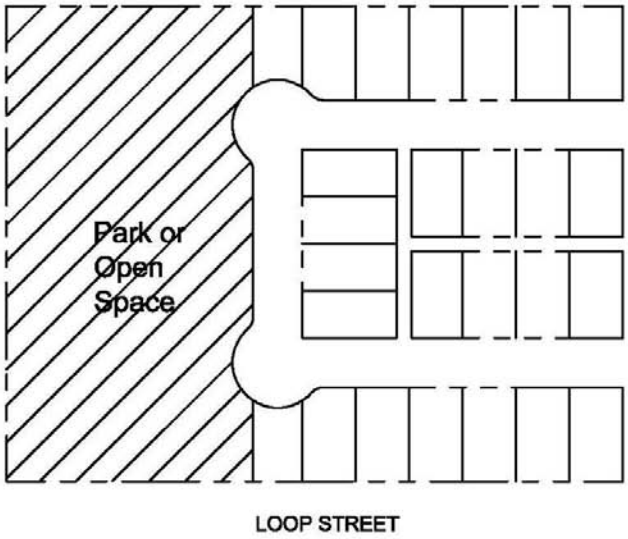

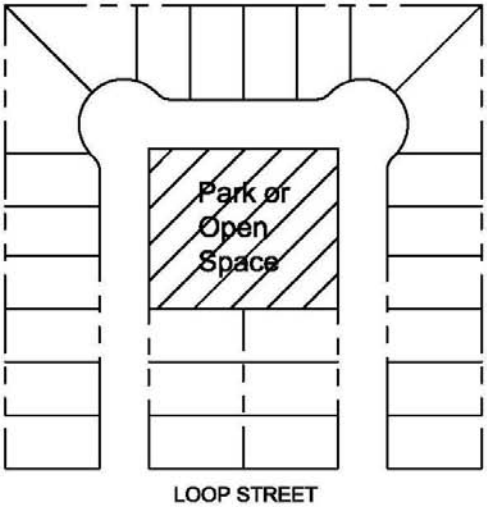

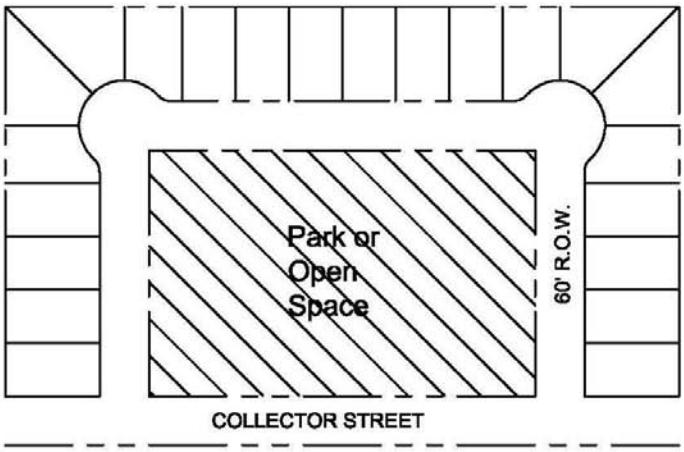

Table 9.01-1: Minor Waivers – Initial Decision-Makers & Appellate Decision-Makers

Type of Minor Waiver	Initial Decision-Maker	Appellate Decision-Maker	Further Appeal
Water Line Extension to Boundary of Development *Section 8.02(d)(2)c.*	Director of Engineering Services	Planning & Zoning Commission	City Council
Connection Onto City Sanitary Sewer System *Section 8.02(e)(1)*	Director of Engineering Services	Planning & Zoning Commission	City Council
Street Lighting *Section 8.04(b)(11)*	Director of Engineering Services	Planning & Zoning Commission	City Council
Requirement for Alleys *Section 8.05*	Director of Engineering Services *--and--* Director of Development Services	Planning & Zoning Commission	City Council
Side Lot Lines 90°/Radial to Street *Section 8.09(e)(1)*	Director of Development Services	Planning & Zoning Commission	City Council
Lot Lines not Aligning with County, School District or Other Jurisdictional Boundary *Section 8.09(e)(2)*	Director of Development Services	Planning & Zoning Commission	City Council
Residential Lots Facing Similar Lots *Section 8.09(g)(3)*	Director of Development Services	Planning & Zoning Commission	City Council
Subdivision Naming *Section 8.09(n)*	Director of Development Services	Planning & Zoning Commission	City Council
Non-Residential Screening Adjacent to Park or Open Space *Section 8.12(b)(4)*	Director of Development Services *--and--* Director of Parks & Recreation	Planning & Zoning Commission	City Council

Engineering Standards

The *Engineering Standards*, as it exists or may be amended, is adopted into this ordinance as if fully set forth herein.

Version 6/19/12

Engineering Standards

The City of Frisco, Texas

Record of Revisions

6-19-12 Engineering Standards adopted by Council as Appendix to Subdivision Ordinance

Table of Contents

Part A – Design Standards **Page**

SECTION 1 GENERAL REQUIREMENTS 1-1

1.01 Short Title 1-2
1.02 Interpretation 1-2
1.03 Enforcement 1-3
1.04 Amendment 1-3
1.05 Deviation Requests 1-3
1.06 Applicability 1-3
1.07 Other Local, State and Federal Environmental Regulations 1-3
1.08 Texas Accessibility Standards (TAS) 1-4
1.09 Engineering Design Criteria – Section Description 1-4
1.10 Submittal Requirements for Construction Plans 1-6
1.11 Easements 1-8
1.12 Fees 1-10

SECTION 2 THOROUGHFARE DESIGN REQUIREMENTS 2-1

2.01 General 2-2
2.02 Street Design 2-2
2.03 Median, Left-Turn Lane, Right-Turn Lane, Deceleration Lane, and Island Design 2-20
2.04 Alley Design 2-28
2.05 Driveway Design 2-32
2.06 Sidewalk Location and Design 2-41
2.07 Public Right-of-Way Visibility Requirements 2-45
2.08 Frontage Road Design 2-49
2.09 Traffic Signal Installation 2-50
2.10 Street Lighting 2-50
2.11 Street Name Signs 2-53
2.12 Traffic Impact Analysis and Mitigation 2-54

SECTION 3 SUBGRADE AND PAVEMENT DESIGN REQUIREMENTS 3-1

3.01 General 3-2
3.02 Subgrade and Pavement Design Report 3-2
3.03 Subgrade Design Requirements 3-2
3.04 Pavement Design Requirements 3-5

SECTION 4 DRAINAGE DESIGN REQUIREMENTS 4-1

4.01 General 4-2
4.02 Determining Design Discharge 4-2
4.03 Downstream Assessment 4-7
4.04 Street Capacity 4-9
4.05 Alley Capacity 4-10
4.06 Valley Gutters 4-10
4.07 Inlet Location and Capacity 4-10

4.08 Design of Enclosed Storm Sewer System 4-19
4.09 Detention/Retention Facility Design 4-25
4.10 Miscellaneous Drainage Requirements 4-28
4.11 Open Channel Design 4-29
4.12 Hydraulic Design of Culverts 4-34
4.13 Bridge Design Hydraulics 4-35
4.14 Energy Dissipators 4-35
4.15 Floodplain Alterations 4-36
4.16 Erosion and Sedimentation Control 4-38
4.17 Drainage Easements 4-38
4.18 Sustainable Development 4-38

SECTION 5 UTILITY DESIGN REQUIREMENTS 5-1

5.1 Water System-General 5-2
5.1.1 Water Main Location 5-2
5.1.2 Horizontal and Vertical Alignment 5-2
5.1.3 Separation Distance between Water and Wastewater 5-3
5.1.4 Average Daily Water Demands 5-3
5.1.5 Water Main Sizing 5-4
5.1.6 Water Main Materials 5-4
5.1.7 Water Services 5-5
5.1.8 Valves 5-5
5.1.9 Fire Hydrants 5-6
5.1.10 Connections to Existing Water Mains 5-7
5.1.11 Backflow Prevention 5-8
5.1.12 Automatic Flushing Valve 5-8
5.2 Wastewater System-General 5-9
5.2.1 Wastewater Main Location 5-9
5.2.2 Horizontal and Vertical Alignment 5-9
5.2.3 Separation Distance between Wastewater and Water Mains 5-10
5.2.4 Wastewater Flows 5-11
5.2.5 Wastewater Main Sizing 5-11
5.2.6 Wastewater Main Materials 5-12
5.2.7 Wastewater Service Laterals 5-12
5.2.8 Manholes and Cleanouts 5-13
5.2.9 Inverted Siphons 5-14
5.2.10 Wastewater Lift Stations 5-14
5.2.11 Force Mains 5-15
5.2.12 Dumpster Enclosure Drains 5-15
5.3 Reclaimed Water System-General 5-16
5.3.1 Reclaimed Water Main Location 5-16
5.3.2 Horizontal and Vertical Alignment 5-16
5.3.3 Separation Distance between Reclaimed Water and Other Systems 5-16
5.3.4 Reclaimed Water System Materials 5-16
5.4 Easements 5-17
5.5 Thrust Restraint 5-17
5.6 Pavement Cut and Repair 5-18
5.7 Trenchless Construction 5-18
5.8 Crossings 5-19
5.9 Corrosion Protection 5-20

SECTION 6 LANDSCAPING DESIGN REQUIREMENTS 6-1

6.01 General 6-2
6.02 Landscape Requirements within the Median 6-2
6.03 Approved Plant Materials 6-4

SECTION 7 IRRIGATION DESIGN REQUIREMENTS 7-1

7.01 General 7-2
7.02 Roadway Irrigation Requirements 7-2
7.03 Additional Irrigation Design Requirements within Roadway 7-3

SECTION 8 ENVIRONMENTAL REQUIREMENTS 8-1

8.01 General 8-2
8.02 Storm Water Management Plan (SWMP) – Permanent Controls 8-2
8.03 Texas Construction General Permit (CGP) 8-3
8.04 Storm Water Pollution Prevention Plan (SWP3) 8-3

SECTION 9 STRUCTURAL DESIGN REQUIREMENTS 9-1

9.01 General 9-2
9.02 Code Requirements 9-2
9.03 Geotechnical Performance Specifications 9-3
9.04 Bridge Design 9-5
9.05 Retaining Wall Design 9-6
9.06 Slope Stability Design Criteria 9-8
9.07 Screening Wall Design Criteria 9-9
9.08 Excavation Support 9-9
9.09 Construction Plans 9-9
9.10 Construction Inspection and Certification 9-13

SECTION 10 SURVEY REQUIREMENTS 10-1

10.01 General 10-2
10.02 Survey Markers and Monumentation 10-2
10.03 Final Plat Acceptance 10-3

Part B – Construction Standards

GN - General Notes
TS - Technical Specifications
AM - Approved Materials List
SD - Standard Details
Appendix A - Definitions and Abbreviations
Appendix B - Plan Checklists
Appendix C - Revision Log

DS

DESIGN STANDARDS

SECTION 1 – GENERAL REQUIREMENTS

Section 1 – General Requirements

1.01 Short Title

These are hereby adopted as a part of the "Engineering Standards", Sections 1 – 10 and Appendices, including Technical Specifications and Standard Construction Details which shall be in full force and effect from and after the effective date of adoption of the Engineering Standards.

1.02 Interpretation

In the interpretation and application of the provisions of these regulations, it is the intention of the City Council that the principles, standards and requirements provided for herein shall be minimum requirements for the design of both subdivisions and municipal capital projects in the City, and, where other City ordinances or regulations of the City are more restrictive in their requirements, such other ordinances or regulations shall govern.

The City has adopted various ordinances and master plans, which address various requirements not explicitly included in the Engineering Standards, including, but not limited to the following. The Engineer is responsible for understanding and complying with the City's various ordinances and master plans.

A. Building Code

B. Water Capital Improvement Plan 2008 Update

C. Wastewater Capital Improvement Plan 2008 Update

D. Reclaimed Water Capital Improvement Plan 2006

E. Comprehensive Plan;

F. Flood Damage Prevention Ordinance

G. Hike and Bike Master Plan

H. Impact Fee Ordinance

I. International Fire Code (Including Oil and Gas Drilling)

J. Parks, Recreation & Open Space Master Plan;

K. Preston Corridor Access Management Plan;

L. Right-of-Way Management Ordinance;

M. Subdivision Ordinance;

N. Tributary Study;

O. Zoning Ordinance;

1.03 Enforcement

The City's Engineering Standards are issued by the Engineering Services and Public Works Departments, and are hereby authorized to enforce the provisions of these Engineering Standards. The standards and any updates will be available on the City's website.

These Engineering Standards shall be in full force and effect immediately upon adoption by the City Council. Projects will be required to comply with all requirements. The standards include the various design criteria, technical specifications, and standard construction details which are considered **minimum** requirements for the design and construction of adequate public facilities within the City. **The Engineer of record shall bear the sole responsibility for meeting the Engineering standard of care for all aspects of the design and providing a design that's required by the site-specific conditions and intended use of the facilities, while at a minimum meeting the City's design and construction requirements.**

1.04 Amendment

A. The City may amend the Engineering Standards. In order to ensure that the Engineer has the City's latest design standards, they are directed to the City's website to acquire the City's most current design standards. The Engineering Standards will include a Record of Revisions to identify any revisions to the Engineering Standards.

B. A formal request to modify current design criteria or add new design criteria can be submitted to the City for consideration in writing to the Director of Engineering Services.

1.05 Deviation Requests

A. All deviations from the requirements included in the Engineering Standards shall be approved by the Director of Engineering Services.. **A grant of an alternative material, design, or method of construction shall not affect nor relieve the Engineer of the obligation and responsibility of such material, design, or method of construction for the intended purposes**.

B. In the event that specific circumstances dictate requirements not already included in the Engineering Standards, it shall be the responsibility of the Engineer to provide the additional information as deemed necessary by the Director of Engineering Services in writing for review.

1.06 Applicability

The Engineer shall be responsible for the applicability of the information contained in the Engineering Standards to the design of their particular project. The Engineer shall also be responsible for the applicability and accuracy of the information furnished in their design. Acceptance by the City of the plans for construction shall not be construed to relieve the Engineer of any responsibility.

1.07 Other Local, State and Federal Environmental Regulations (this is not intended to be a complete list and is provided for informational purposes only)

- Section 404 of the Clean Water Act (33 USC 1344)
- Water Rights http://www.tceq.state.tx.us/permitting/water_supply/water_rights/permits.html
- Migratory Bird Treaty Act http://www.fws.gov/pacific/migratorybirds/mbta.htm

- Water Well Drilling http://www.tgpc.state.tx.us/WaterWells.htm
- Threatened and Endangered Species and
    - http://www.tpwd.state.tx.us/huntwild/wild/species/endang/index.phtml
- The Antiquities Code of Texas http://www.thc.state.tx.us/crm/crmantcode.shtml
- Air Quality http://www.tceq.state.tx.us/permitting/air/newsourcereview/before.html
- TCEQ Dam Requirements

1.08 Texas Accessibility Standards (TAS)

A. All plans and specifications for the construction or alteration of public buildings and facilities, privately owned buildings and facilities leased or occupied by state agencies, places of public accommodation, pedestrian facilities within public right-of-way, and commercial facilities must be in compliance with the Texas Accessibility Standards (TAS) for individuals with disabilities and must conform to the standards required by regulations issued by the **Texas Department of Licensing and Regulation (TDLR)**, under the **Architectural Barriers Act, codified as Article 9102**, Texas Civil Statutes (see **Architectural Barriers Administrative Rules – Section 68.30** for exemptions).

B. Projects with a total estimated construction cost of $50,000 or more are required to submit a full set of construction documents in accordance with Administrative Rule 68.20 to TDLR for registration and review. For Public Right-of-Way projects, the estimated cost for the project shall be based on pedestrian elements only in accordance with Administrative Rule 68.102. If a project's total estimated construction cost is less than $50,000, it is not required to be submitted to TDLR for registration and review; however, the project is still required to comply with TAS. An architect, engineer, interior designer, or landscape architect with overall responsibility for the design of a building or facility subject to subsection 5(j) of the Architectural Barriers Act, shall mail, ship, or hand-deliver the project registration form, review and inspection fees, and construction documents to the TDLR, a registered accessibility specialist, or a contract provider not later than thirty (30) business days after the design professional seals and signs the construction documents. An Architectural Barriers Project Registration form must be completed for each subject building or facility**.**

1.09 Engineering Criteria – Section Descriptions

The following is a brief description of the contents of each section.

A. Section 1 – General Requirements

This section includes an overview and definitions, abbreviations, and acronyms used in the manual. This section also includes general minimum requirements applicable to all projects, including submittal requirements to the City and to other agencies.

B. Section 2 – Thoroughfare Design Requirements

This section includes minimum requirements associated with the City's thoroughfares, including roadway geometry, street lighting, signage and markings, and traffic signals, etc.

C. Section 3 – Subgrade and Pavement Design Requirements

This section includes minimum requirements associated with pavement and subgrade design requirements (including geotechnical requirements) for roadways within the City,

D. Section 4 – Drainage Design Requirements

This section includes minimum storm drainage design requirements to be followed in the design of storm drainage facilities, and demonstrates the design procedures to be used on drainage projects within the City. This section also addresses floodplains, bridge hydraulics, erosion control and sustainable development.

E. Section 5 – Utility Design Requirements

This section includes minimum design requirements for public wastewater facilities, water distribution and transmission system facilities.

F. Section 6 – Landscaping Design Requirements

This section provides additional requirements and standards to address landscaping requirements within roadway right-of-way, specifically in the medians of arterial roadways.

G. Section 7– Irrigation Design Requirements

This section provides additional requirements and standards to address irrigation requirements within roadway right-of-way.

H. Section 8 – Environmental Requirements

This section provides additional requirements and standards to address environmental requirements, including stormwater best management practices.

I. Section 9 – Structural Design Requirements

This section establishes minimum structural design and geotechnical requirements for various items including bridges, concrete structures, retaining walls, and screening walls. This section also addresses slope stability analysis.

J. Section 10 – Survey Requirements

This section is to address survey requirements.

K. Appendix

1. General Notes – The latest version of general notes shall be included in the Construction Plans for all projects.

2. Standard Details - All projects shall be constructed in accordance with the City's standard details which are available through the City web site. It is the responsibility of the engineer to use the most current detail, as the details are subject to change. If a necessary standard detail is not available from the City, TxDOT details are generally acceptable except for utility construction. For utility work, a standard detail may be selected from the most recent version of Public Works Construction Standards as issued by the North Central Texas Council of

Governments (NCTCOG). It is the responsibility of the Design Engineer to provide a detail in the plans if a standard detail is not available.

3. Approved Materials List – Products that have been pre-approved for use on projects are available in this listing on the City web site. Products not shown on this list must be approved prior to installation.

4. Technical Specifications – All projects shall be constructed in accordance with the most recent version of the City specifications which are available through the City web site or TxDOT specifications. It is the responsibility of the Design Engineer to use the most current specification, as the specifications are subject to change. If a necessary specification is not available from the City or TxDOT, then one may be selected from the most recent version of NCTCOG Public Works Construction Standards.

5. Plan Checklists – common elements necessary on most plans that should be verified by designer prior to submittal of plans. These elements are routinely reviewed by staff and if missing can delay issuance of construction permits. Various checklists will be made available on the website as developed over time.

1.10 Submittal Requirements for Construction Plans

A. All improvements shall be designed in accordance with the City design criteria, specifications, and standard details referenced as part of the Engineering Standards.

B. Up to five (5) copies of complete construction plans, technical specifications, construction details, requested calculations, construction cost projection, geotechnical report, and certified plan submittal checklist are required to be submitted to the City for review and approval. All submitted items shall be 100% complete at the time of the submittal. Any incomplete components of a submittal shall result in the entire submittal being considered incomplete and shall be returned to the Engineer not reviewed. If the submittal is for a private project, the City will notify the Engineer and Developer of the incomplete submittal.

C. The construction plans shall be submitted on 22” x 34” sheets and electronic PDF copy. Each sheet of the construction plans shall contain a title block, including space for the notation of revisions. This space is to be completed with each revision to the plan sheet and shall clearly note the nature of the revision and the date that the revision was made.

D. See Plan Checklist in Appendix section for a recommended order of plan sheets.

E. Record Drawings shall be submitted on mylar print and electronic CAD files for public infrastructure projects. The CAD file shall include linework for property boundaries, right-of-way, easements, roadway, signals, lighting, drainage, water, and sewer facilities. Refer to Survey Requirements for additional electronic submittal requirements.

F. Each construction plan sheet shall bear the seal and signature of the Licensed Professional Engineer in the State of Texas who prepared the plans. If standard details are included in the construction plan submittal, the Engineer shall provide the following certification on the title sheet of the plans:

> The standard [City, TxDOT, etc.] details specifically identified in this set of construction plans [or specifically included in these bidding/contract documents] have been selected by me or under my

direct responsible supervision as being applicable to this project. _____, P.E., Firm Registration # _____

G. The Engineer shall provide the following certification on the title sheet of the plans: title sheet of the construction plans shall bear a signature block for approval for construction which shall read as follows:

> These construction plans have been reviewed by the City of Frisco. The City has determined that they are in general compliance with the City's Master Plans and Engineering Standards. The City's review and release of these plans does not represent that the City has re-engineered or verified the engineering of the proposed improvements. The Design Engineer is responsible for all engineering and recognizes that specific site circumstances or conditions may require improvements constructed to exceed minimum standards contained in the City's Engineering Standards. The Design Engineer is responsible for the applicability and accuracy of the plans and specifications contained herein. _____, P.E., Firm Registration # _____

H. Specific information required for submittals can be found within this document and in the plan checklists located on the City website . The City reserves the right to specify additional requirements as necessary to facilitate the review.

Submittals	Responsible **Reviewing Department**
Preliminary Site Plan - Private	
Overall Concept	Development Services
Paving, Grading, Drainage	Engineering
Traffic (Signs, Markings, Signals, Lighting, TCP)	Traffic
Utilities	Engineering
Preliminary Plans (30/60%) - Public	
Paving, Grading, Drainage	Engineering
Traffic (Signs, Markings, Signals, Lighting, TCP)	Traffic
Utilities	Engineering
Landscaping and Irrigation (Public)	Parks
Construction Plans (Final) - Public and Private	
Paving, Grading, Drainage	Engineering
Traffic (Signs, Markings, Signals, Lighting, TCP)	Traffic
Utilities	Engineering
Landscaping and Irrigation (Public)	Parks
Landscaping and Irrigation (Private)	Development Services
Project Manual (Public)	Engineering
Technical Specifications (Private)	Engineering

I. Any projects requiring permits from agencies other than the City (such as railroad, TxDOT, NTTA, etc) shall submit the required permit documents to the City for approval. City staff will review and submit permit requests to the agencies.

J. A separate checklist is available for construction plan sets to be submitted at the pre-construction conference.

1.11 Easements

A. General - Easements shall be provided for public facilities including water, wastewater, reclaimed water, drainage features, and traffic signal or lighting equipment that are located outside the public right of way. Storm drain lines are also considered public if they cross property lines and collect runoff from adjacent properties. For single-family residential developments, water, wastewater, reclaimed water and storm drain lines shall not cross residential lots unless specifically approved by the Director of Engineering Services. Additional easement width may be required to accommodate future maintenance of the facilities.

B. Acquisition of Easements - Easements that have not been dedicated on a plat may be acquired by separate instrument. The acquisition of any easement is the owner's responsibility. If the owner cannot obtain a required offsite easement, the owner may request assistance from the City. Prior to requesting assistance, the owner shall provide a written offer to the property owner based on fair market value. The City's assistance does not relieve the owner of the cost of purchasing the easement. In addition, the owner shall reimburse the City for all costs associated with the acquisition.

C. The process for acquiring an easement by separate instrument is as follows:

- Submit a metes and bounds description, a drawing of the easement sealed, signed and dated by a licensed surveyor, and ownership information to Engineering Services.
- Engineering Services will prepare the easement documents on city forms.
- Person requesting the easement shall pay any document preparation and filing fees required by the city.
- After fee is paid to City, the easement documents will be sent to the person requesting the easement to obtain all necessary signatures (other than City's).
- Return all signed documents to the city for filing with the county.
- City will send a copy of the filed easement to the person requesting the easement and the easement grantor, if needed.

D. Abandonment of Right of Way and Easements - Right of way and easements that have not been abandoned by plat may be abandoned by separate instrument. Signatures are required from all the public utility companies, including franchise utilities and the adjacent affected property owners indicating either agreement or disagreement to the proposed abandonment. Right of way and easements proposed to be abandoned that do not contain improvements may be processed administratively. If improvements are present, the abandonment request will be forwarded to City Council for approval. Abandonments opposed by the affected property owners will also be forwarded to City Council for approval. Right of way and easements granted to entities other than the City shall be abandoned by that entity.

E. The following describes the process for abandoning right of way or easements:

- All property owners abutting the proposed abandonment shall be notified by the applicant by certified letter. A written response from each abutting property owner must be received by the city prior to staff review.
- All public utilities including franchise utilities must consent to the abandonment.
- The applicant shall provide a description as to how the city originally acquired the right of way or easement (i.e., by plat, by separate instrument, etc.).
- For right of way, the applicant shall provide a certified appraisal stating the value. In addition, the applicant shall provide an explanation that identifies why the proposed use of the right of way will benefit the community under private ownership, versus retention of the property as public right of way.
- For easements, the applicant shall describe why the easement is no longer needed.

F. The right of way/easement abandonment application shall be submitted along with the supporting documentation to the Engineering Services Department for coordination and processing. The application form is available from the Engineering Department or the City's website.

G. Easement Use Agreements - The city may allow permitting of certain improvements within easements with the execution of an Easement Use Agreement, which is in addition to a building permit. The agreement states that the City is not responsible for the maintenance or reconstruction of any improvements located in the easement or right of way and that the owner must remove the improvement at the request of the City. Forms and instructions are available from Development Services, or on the City's website. <LINK>

H. The Easement Use Agreement is processed by Development Services with concurrence and review by Engineering Services. The following items will require an Easement Use Agreement:

- Driveways/flatwork
- Brick, stone fences
- Retaining walls (less than 3 feet that support a structure, or greater than 3 feet)
- Private storm systems/area drains
- Swimming pools decks
- Wood decks, gazebos and patios (covered/uncovered)
- Buildings and other permanent improvements

Items listed below may be allowed without the execution of an Easement Use Agreement and with approval from the Director of Engineering Services:

- Paving or flatwork

- Wooden or chain-link fences (where allowed)
- Retaining walls less than three feet in height that do not support a structure or infringe on the required visibility triangles.

1.12 Fees

A listing of the required fees is available on request from Development Services.

SECTION 2 - THOROUGHFARE DESIGN REQUIREMENTS

Section 2 – Thoroughfare Design Requirements

2.01 General

A. The arrangement, character, extent, width, alignment, and location of all streets, public ways, alleys, and driveways shall be in conformity with the City's Thoroughfare Plan and Comprehensive Plan and should be considered in their relation to existing and planned streets, alleys and driveways, topographical and environmental features, scenic views, and the land uses proposed to be served by such streets.

B. All thoroughfare designs shall meet the guidelines in AASHTO's current *A Policy on Geometric Design of Highways and Streets*.

2.02 Street Design

A. Thoroughfare Definitions – The City recognizes five basic classifications of public roadways that include highways, major thoroughfares, minor thoroughfares, collectors, and local streets as identified in the transportation element of the Comprehensive Plan. Each class provides a certain degree of continuity, capacity, and accessibility to adjacent land uses. While differentiated by function, there is also a variance in geometric design. Table 2.1 summarizes the general design criteria of roadways within the City. The typical cross sections are depicted in Figure 2.1.

1. Major Thoroughfares – Six-lane divided roadways defined herein as Type A thoroughfares. Type A thoroughfares are typically initially constructed as four-lane divided roadways with a wider median and then widened to six lanes at a later date. Frontage roads are also considered major thoroughfares.

2. Minor Thoroughfares – Four-lane divided roadways defined herein as Type B thoroughfares.

3. Collectors – Commercial collectors provide access from a Type A or B thoroughfare to non-residential properties and are defined herein as Type C thoroughfares. Residential collectors connect to a Type A or B thoroughfare, extend more than six hundred feet (600') into a residential neighborhood, and have no homes fronting on them. Residential collectors can be built with the cross section of a Type D, F, or G thoroughfare.

4. Local Streets – Residential streets with homes fronting on them are defined herein as Type D, E, F, and G thoroughfares, each with different design characteristics depending on whether the homes are front entry or alley served and whether or not the street is adjacent to a school or park.

5. Private Streets – Private streets shall be designed and constructed to the same standards as public streets. Any gated entrances shall also meet the requirements of Section 2.05.K.

6. Public Ways – Public ways shall be designed and constructed to the same standards as public streets and shall meet the design criteria of a commercial collector (Type C thoroughfare) unless otherwise allowed under Subsection a below. Public ways shall be privately maintained, shall be dedicated to public use, and shall not be gated.

    a. A public way can be reduced to the design criteria of a Type F thoroughfare if the owner agrees to prohibit parking on the public way and to actively enforce such prohibition. The parking prohibition shall be recorded on the plat and shall be clearly posted along the public way.

B. Roadway Geometrics – Geometrics of City streets shall be defined as the geometry of the pavement and curb areas that govern the movement of traffic within the confines of the right-of-way (ROW). Included in the geometrics are pavement width, horizontal curvature, width of traffic lanes, median nose radii, curb radii at street intersections, pavement cross-slope, crown height, pavement thickness, and geometric shapes of islands separating traffic movements and other features.

1. Design Speed – The design speed is a primary factor in the horizontal and vertical alignment of roadways. Design features such as curvature, super-elevation, turning movement radii, and sight distance affects roadway lane width, pavement width, pavement cross-slope, pavement crown, and clearances. Refer to Table 2.1.

2. Grades – Roadway grades shall be a minimum of eight-tenths percent (0.8%) in order to insure proper flow of surface drainage toward inlets and a maximum of six percent (6%). Steeper grades may be permitted on local residential streets and where required by topographical and/or natural features, as approved by the Director of Engineering Services.

3. Roadway Centerline

   a. Roadways shall be placed in the center of the ROW. The centerline of curves shall be tangent to the centerline of street at each end of curve.

   b. If offset, roadway centerlines for Type C, D, E, F, and G thoroughfares shall be offset a minimum of one hundred and twenty five feet (125'). If offset, Type A and B thoroughfares shall be offset to meet the median requirements in Section 2.03.B.

4. Cross-Slope/Crown Height – Type A and B thoroughfares shall have a two-percent (2%) cross-slope. The cross-slope can vary where there is a transition into or out of a maximum two percent (2%) superelevation. Type C and D thoroughfares shall have six-inch (6") parabolic crowns, Type E thoroughfares a four-inch (4") parabolic crown, and Type F and G thoroughfares a five-inch (5") parabolic crown

5. Pavement Thickness and Reinforcement – See Section 3 of the Engineering Standards for subgrade and pavement design requirements.

6. Transitions – A concrete transition shall be constructed where four (4) lanes of a thoroughfare connect to a two (2) lane thoroughfare. The transition occurs only in the direction in which traffic needs to be shifted laterally to join the thoroughfare with a different cross section.

   a. Transitions from a four (4) lane to a two (2) lane thoroughfare shall be a minimum of sixteen feet (16') wide, a minimum of three hundred feet (300') long, and meet AASHTO's current minimum design requirements based on a design speed of 25 mph.

   b. A transition from a two (2) lane to a four (4) lane thoroughfare that occurs less than one thousand feet (1,000') from a traffic signal, or from an intersecting Type A or B thoroughfare, shall be a two (2) lane transition twenty-four feet (24') wide, a minimum of three hundred feet (300') long, and meet AASHTO's current minimum design requirements based on a design speed of 25 mph.

   c. A transition from a two (2) lane thoroughfare to a four (4) lane thoroughfare that occurs more than one thousand feet (1,000') from a traffic signal, and from an intersecting Type A or B thoroughfare, shall be a one (1) lane transition sixteen feet (16') wide, a minimum

of three hundred feet (300') long, and meet AASHTO's current minimum design requirements based on a design speed of 25 mph.

7. Dead-End Streets/Cul-de-Sacs/Stub Streets

   a. All dead-end streets shall have a turn-around unless otherwise allowed in Subsection d below. Turn-arounds at the end of dead-end streets (cul-de-sacs) shall have a circular driving surface that has a minimum radius of fifty feet (50') and a street right-of-way that has a minimum radius of sixty feet (60').

   b. The maximum length of a dead-end street with a turn-around (cul-de-sac) shall be six hundred feet (600'), measured from the right-of-way line of the intersecting street to the center point of the turn-around, except in conditions of unusual topography.

   c. If any residential lot fronts onto the dead-end portion of a street that will be extended in the future, a temporary turn-around that meets the standards described above shall be constructed at the end of the dead-end street within a temporary street easement. The following note shall be placed on the plat: "Cross-hatched area is temporary street easement for turn-around until street is extended (give direction) with future development of abutting property".

   d. A stub street is an undivided dead-end street that will be extended in the future that does not have a turn-around, which is only allowed under the following conditions: No residential lots shall front onto a stub street. Non-residential lots adjacent to a stub street shall have access to another street. If the length of a residential stub street exceeds the depth of the adjacent residential lots, it shall be temporarily blocked at the rear edge of the lots (or alley) with barrel-mounted barricade. If a non-residential stub street extends more than one hundred feet (100') beyond the last driveway on the street, it shall be temporarily blocked at the last driveway with barrel-mounted barricade.

   e. A stub street shall have a permanent Type III barricade installed at its terminus. A residential stub street shall also have a 24"x30" sign prominently posted at its terminus with black letters on a white background that state, "NOTICE – This street will be extended as part of a future development." The installation and cost of these barricades and signs shall be the responsibility of the developer.

C. Minimum Horizontal Design Radius

1. The minimum centerline radius is a function of design speed, superelevation, and the vehicle side friction factor. Side friction is the force that keeps a vehicle from sliding off of the roadway.

2. The minimum horizontal radii are shown in Table 2.2 and are in accordance with the guidelines in AASHTO's 2011 edition of *A Policy on Geometric Design of Highways and Streets.*

TABLE 2.1: General Roadway Design Criteria

Criteria	Thoroughfare Class						
	Major Type A	Minor Type B	Commercial Collector Type C	Local Type D	Local Type E	Local Type F	Local Type G
Right-of-Way (ROW)	120'(1)	90'(2)	60'	60'	50'	60'	60'
Pavement Width (face to face)	36' in each direction	24' in each direction	36'	36'	26'	30'	26'
Traffic Lanes	6	4	2	2	2	2	2
Left Turn-lane Width	2 @ 10'	1 @ 11'	N.A.	N.A.	N.A.	N.A.	N.A.
Right Turn-lane Width	11'	11'	N.A.	N.A.	N.A.	N.A.	N.A.
Median Width	24'	18'	N.A.	N.A.	N.A.	N.A.	N.A.
Parkway Width	12'	12'	12'	12'	12'	15'	17'
Design Speed, V (MPH)	45	45	30	30	25	25	25
Minimum Grade	0.8%	0.8%	0.8%	0.8%	0.8%	0.8%	0.8%
Maximum Grade	6%	6%	6%	6%	6%	6%	6%
Min. Horizontal Radii	See Table 2.2						
Min. Tangent Between Curves	100'	100'	100'	100'	N.A.	N.A.	N.A.
Min Length of Vertical Curve	See Table 2.3 and Table 2.4						
Stopping Sight Distance	425'	360'	200'	200'	155'	155'	155'
Parking	Prohibited	Prohibited	Prohibited	Allowed	Allowed	Allowed	Allowed
Volume Range (VPD)	36-45,000	20-28,000	12-18,000	6-12,000	N.A.	N.A.	N.A.

(1) 140' or 160' ROW at intersections (See Figures 2.2 and 2.4)
(2) 110' or 120' ROW at intersections (See Figures 2.3 and 2.5)

Major Thoroughfare Type A (Intersection)

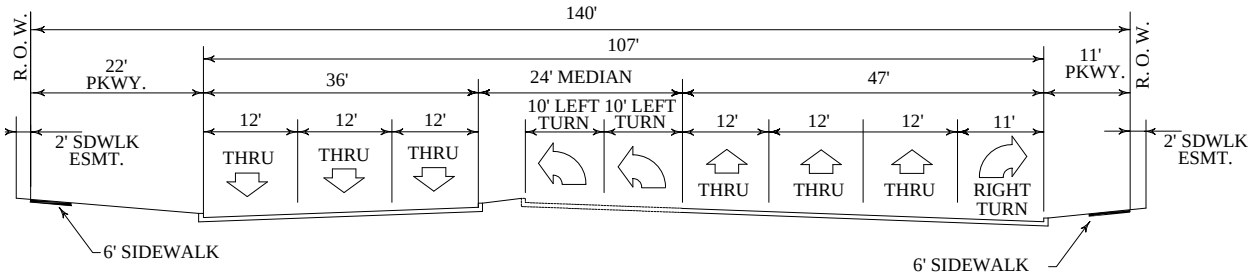

Major Thoroughfare Type A (Midblock)

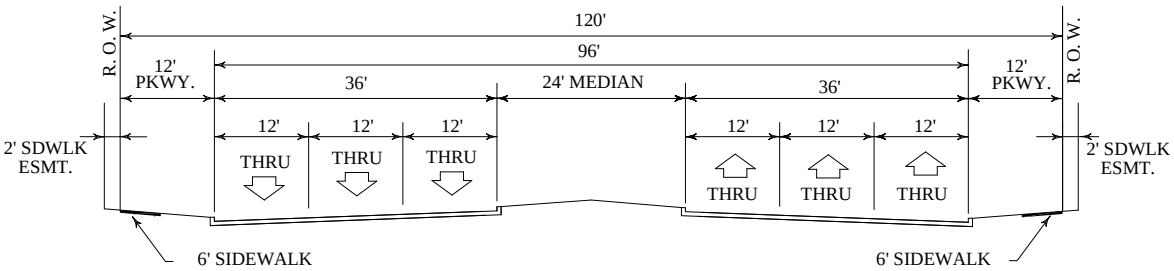

Minor Thoroughfare Type B (Intersection)

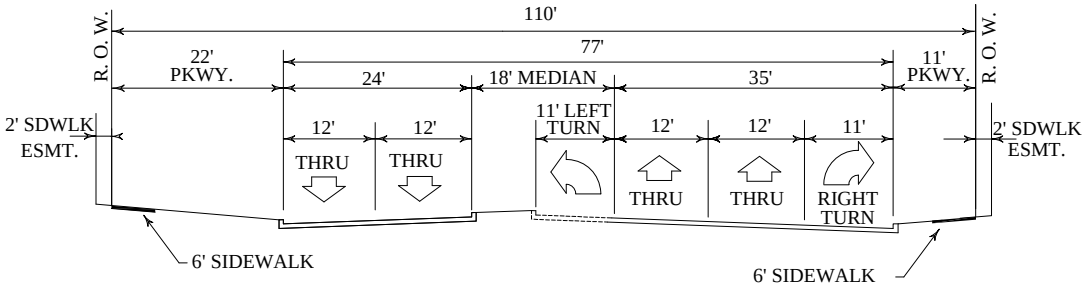

Minor Thoroughfare Type B (Midblock)

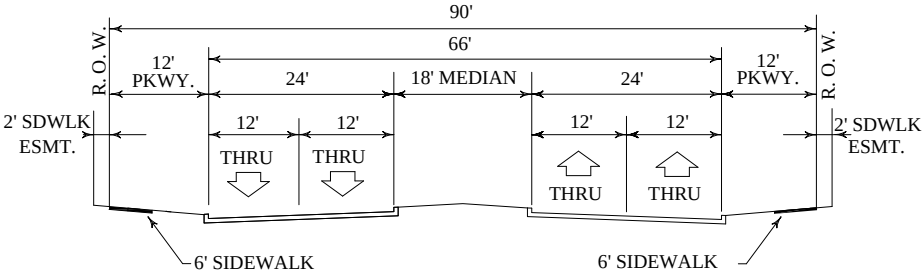

FIGURE 2.1: Typical Cross Sections

Major Thoroughfare Type A (At Frontage Road)

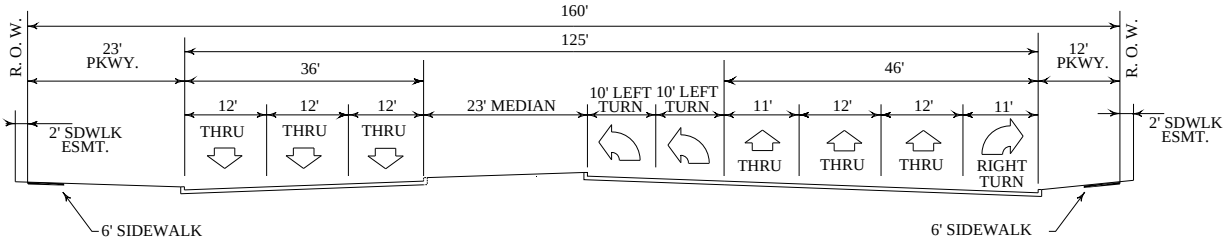

Major Thoroughfare Type A (Between Frontage Roads)

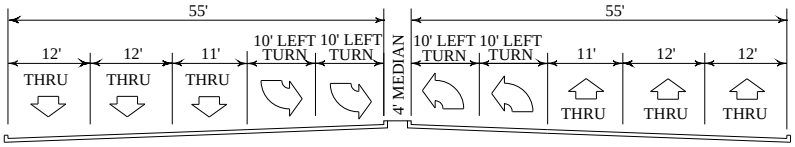

Minor Thoroughfare Type B (At Frontage Road)

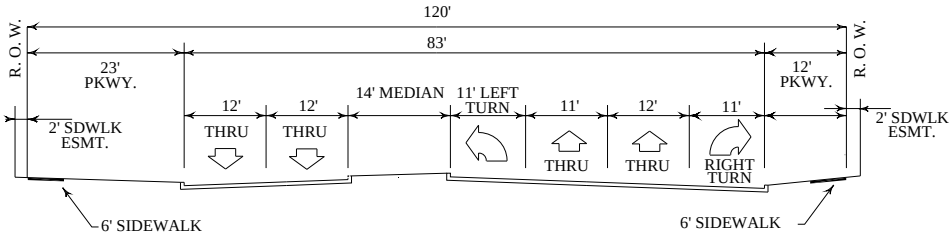

Minor Thoroughfare Type B (Between Frontage Roads)

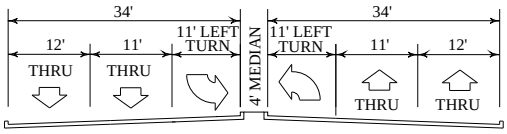

FIGURE 2.1 (Cont.): Typical Cross Sections

Commercial Collector Type C and Local Type D

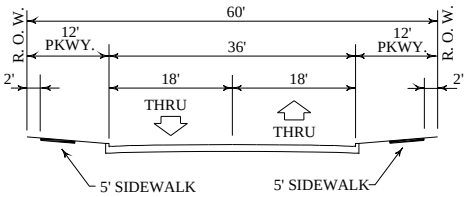

Local Type E

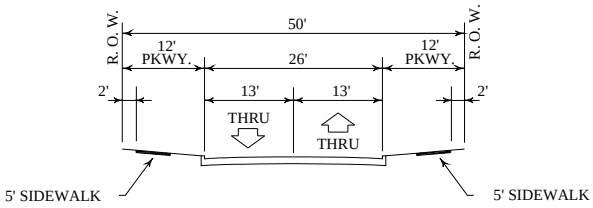

Local Type F - Front Entry

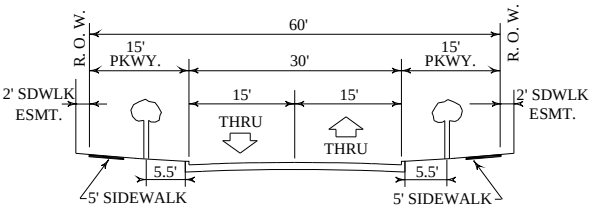

Refer to the Zoning Ordinance for street tree spacing, size, and species.

Local Type G - Rear Entry

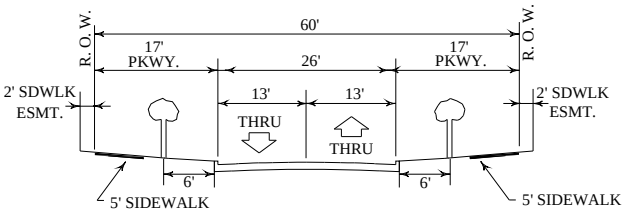

Refer to the Zoning Ordinance for street tree spacing, size, and species.

Residential Collector

Use the cross-section of Type D, F, or G

Divided Residential Subdivision Entrance

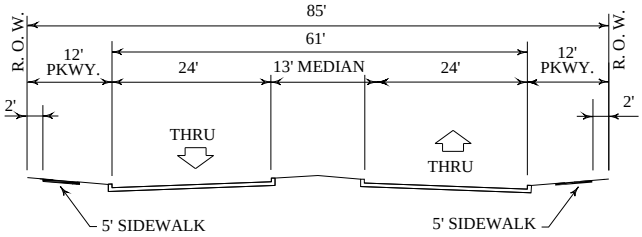

FIGURE 2.1 (Cont.): Typical Cross Sections

TABLE 2.2: Minimum Horizontal Centerline Radius

Design Speed, V (MPH)	Friction Factor, F	Superelevation, e (ft/ft)	Radius, R (ft) (Rounded for Design)
25	0.23	-0.02	250(1)
30	0.20	-0.02	350
35	0.18	-0.02	525
40	0.16	-0.02	775
45	0.15	-0.02	1100
50	0.14	-0.02	1400

(1) May be reduced to two hundred feet (200') radius at mid-block locations provided that it is shown that the general public safety is not compromised (e.g., stopping sight distance). A curve, with a radius less than two hundred fifty feet (250') must be a minimum of three hundred feet (300') from a street or alley intersection.

D. Minimum Vertical Alignment

1. Vertical curves are utilized in roadway design to affect gradual change between tangent grades and will result in a design which is safe, comfortable in operation, pleasing in appearance and adequate for drainage. Vertical curve alignment shall also provide Stopping Sight Distance (SSD) in all cases. SSD is a function of design speed, perception-reaction time, and deceleration rate. The perception-reaction time is assumed to be 2.5 seconds and is in accordance with the guidelines in AASHTO's 2011 edition of *A Policy on Geometric Design of Highways and Streets*. The equation for SSD appears below:

$$SSD = 1.47Vt + 1.075\frac{V^2}{a}$$

SSD = stopping Sight Distance (ft)
t = brake reaction time (2.5 sec.);
V = vehicle design speed (MPH); and
a = deceleration rate, (11.2 ft/s^2)

2. To determine the minimum acceptable length of Crest and Sag curves shown in Tables 2.3 and 2.4, it is assumed that approach grades are between -3% and 3% in the SSD calculation. The SSD for grades steeper than -3 % or 3% shall be in accordance with the guidelines in AASHTO's current *A Policy on Geometric Design of Highways and Streets*. Tables 2.3 and 2.4 also show values of K. K is defined as the rate of vertical curvature and is equivalent to the horizontal distance in feet required to make a one percent (1%) change in grade. The values of A are equivalent to the algebraic difference in grade between the two grades that are being joined together by the vertical curve.

TABLE 2.3: Minimum Acceptable Crest Curve Given Speed and Difference in Grade of Road

Design Speed, V (MPH)	SSD (ft)	K	Length of Vertical Curve (L=KA)									
			A=1.6	A=2	A=3	A=4	A=5	A=6	A=7	A=8	A=9	A=10
25	155	12	50	50	50	50	60	80	90	100	110	120
30	200	19	50	50	60	80	100	120	140	160	180	190
35	250	29	50	60	90	120	150	180	210	240	270	290
40	305	44	70	90	140	180	220	270	310	360	400	440
45	360	61	100	130	190	250	310	370	430	490	550	610
50	425	84	140	170	260	340	420	510	590	680	760	840

TABLE 2.4: Minimum Acceptable Sag Curve Given Speed and Difference in Grade of Road

Design Speed, V (MPH)	SSD (ft)	K	Length of Vertical Curve (L=KA)									
			A=1.6	A=2	A=3	A=4	A=5	A=6	A=7	A=8	A=9	A=10
25	155	26	50	60	80	110	130	160	190	210	240	260
30	200	37	60	80	120	150	190	230	260	300	340	370
35	250	49	80	100	150	200	250	300	350	400	450	490
40	305	64	110	140	200	260	320	390	450	520	580	640
45	360	79	130	160	240	320	400	480	560	640	720	790
50	425	96	160	200	290	390	480	580	680	770	870	960

E. Standard Intersection Layout

1. Street intersections shall intersect at ninety degree (90º) angles. Intersection approaches for Type A and B thoroughfares shall remain perpendicular for a minimum distance equal to the corresponding design speed Stopping Sight Distance (SSD) identified in Table 2.1. For residential collector and/or local street intersections, up to a five degree (5º) tolerance is allowable.

2. When the classification of a thoroughfare changes as it crosses an intersecting street, the design of both thoroughfare approaches shall maintain the characteristics of the higher class thoroughfare for a minimum distance specified by the Director of Engineering Services.

3. The through lane(s) on one approach shall align with the receiving lane(s) on the other side of the intersection. If pre-existing physical encroachments make an offset necessary, a through lane can be offset no more than six feet (6') from its receiving lane when crossing a Type B or smaller thoroughfare and offset no more than eight feet (8') when crossing a Type A thoroughfare. These requirements apply to both public street and private driveway approaches to an intersection.

4. The curb radii shall be a minimum of twenty feet (20') where Type D, E, F, and G thoroughfares intersect with Type D, E, F, and G thoroughfares. The curb radii shall be a minimum of forty feet (40') where Type A, B, and C thoroughfares intersect with Type A and B thoroughfares. The curb radii at all other intersecting streets shall be a minimum of thirty feet (30'). Larger curb radii may be required to accommodate fire trucks and/or commercial trucks.

5. Type A-A, A-B, and B-B intersections shall maintain a maximum slope of two percent (2%) a minimum distance of two hundred feet (200') upstream and downstream of the intersection.

6. Roadway connections to a Type A or B thoroughfare shall maintain a maximum slope of two percent (2%) a minimum distance of one hundred feet (100') upstream and downstream of the intersection.

7. A separate grading plan shall be provided for Type A-A, A-B, and B-B intersections. Grading plans shall account for future extensions of Type A and Type B thoroughfares for a minimum distance of six hundred feet (600') beyond the curb return of the intersection in all directions.

8. At four-way intersections of parabolic streets, the reduction of the crown height shall occur on the thoroughfare with the through gutter.

    a. For Type C and D thoroughfares, the crown height reduction from six inches (6") to three inches (3") shall occur through the intersection and transition from the curb return to a point fifty feet (50') past the curb return.

    b. For Type E thoroughfares, the crown height reduction from four inches (4") to two inches (2") shall occur through the intersection and transition from curb return to a point thirty feet (30') past the curb return.

    c. For Type F and G thoroughfares, the crown height reduction from five inches (5") to three inches (3") shall occur through the intersection and transition from curb return to a point thirty feet (30') past the curb return.

9. A minimum of nine and a half feet (9.5') of parkway shall be maintained from the back of the curb along the curb's radius.

10. ROW width for a Type A thoroughfare that intersects a Type A or Type B thoroughfare shall be one hundred forty feet (140') for a distance of two hundred feet (200') and then taper at a 15:1 ratio to the standard ROW width. See Figure 2.2.

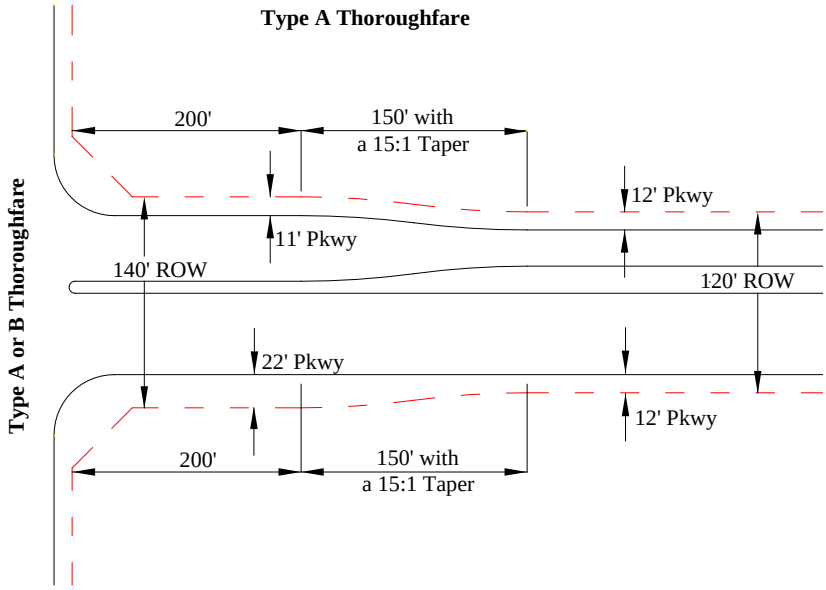

FIGURE 2.2: Type A Thoroughfare Intersection Detail

11. ROW width for a Type B thoroughfare that intersects a Type A or Type B thoroughfare shall be one hundred ten feet (110') for a distance of one hundred fifty feet (150') and then taper at a 15:1 ratio to the standard ROW width to allow build-out of the intersection. See Figure 2.3.

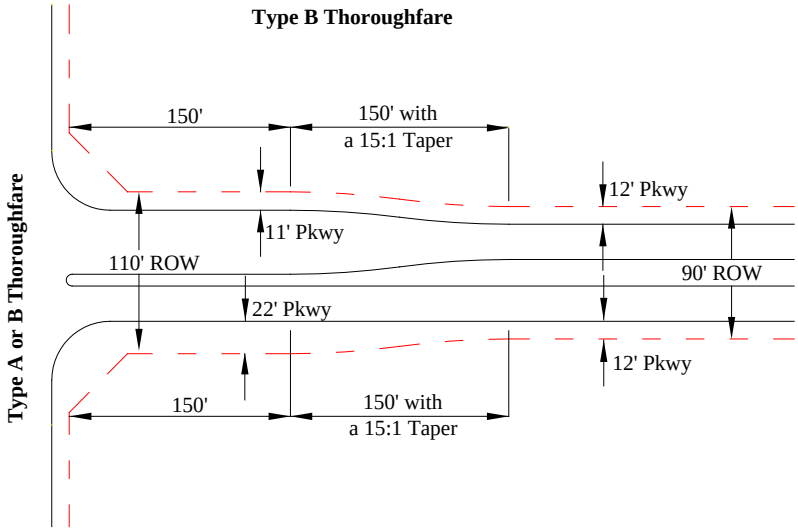

FIGURE 2.3: Type B Thoroughfare Intersection Detail

12. The ROW width for a Type A thoroughfare that intersects with a pair of highway frontage roads shall be one hundred sixty feet (160') for a distance of three hundred feet (300') and then taper at a 15:1 ratio to the standard ROW width to allow build-out of the intersection.

The ROW width for a Type B thoroughfare that intersects with a pair of highway frontage roads shall be one hundred twenty feet (120') for a distance of three hundred feet (300') and then taper at a 15:1 ratio to the standard ROW width to allow build-out of the intersection. See Figures 2.4 and 2.5.

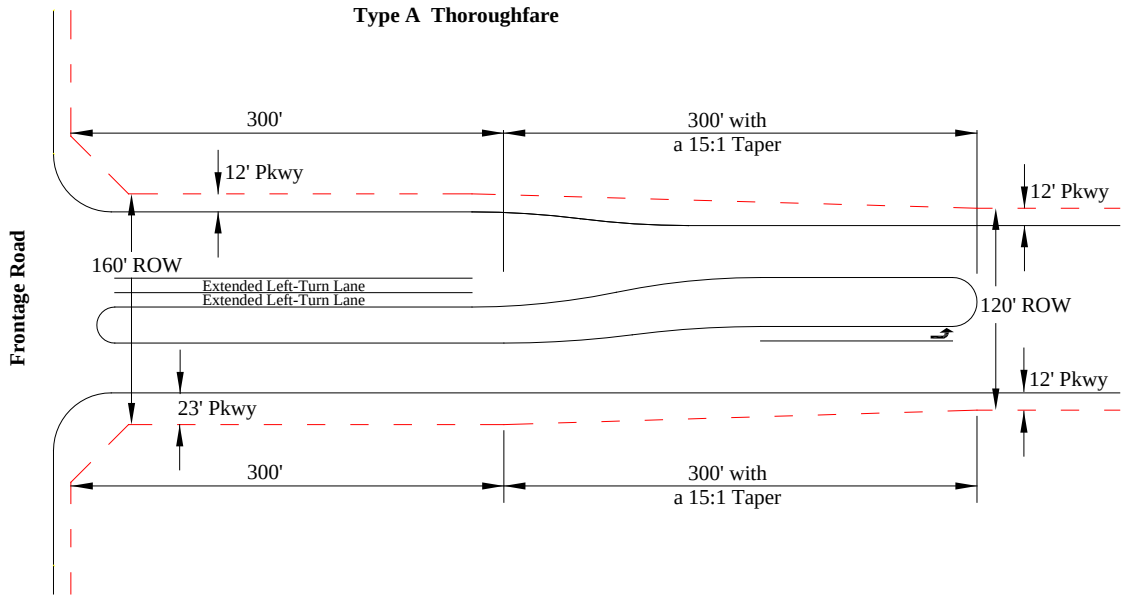

FIGURE 2.4: Type A Thoroughfare Intersection with Frontage Road

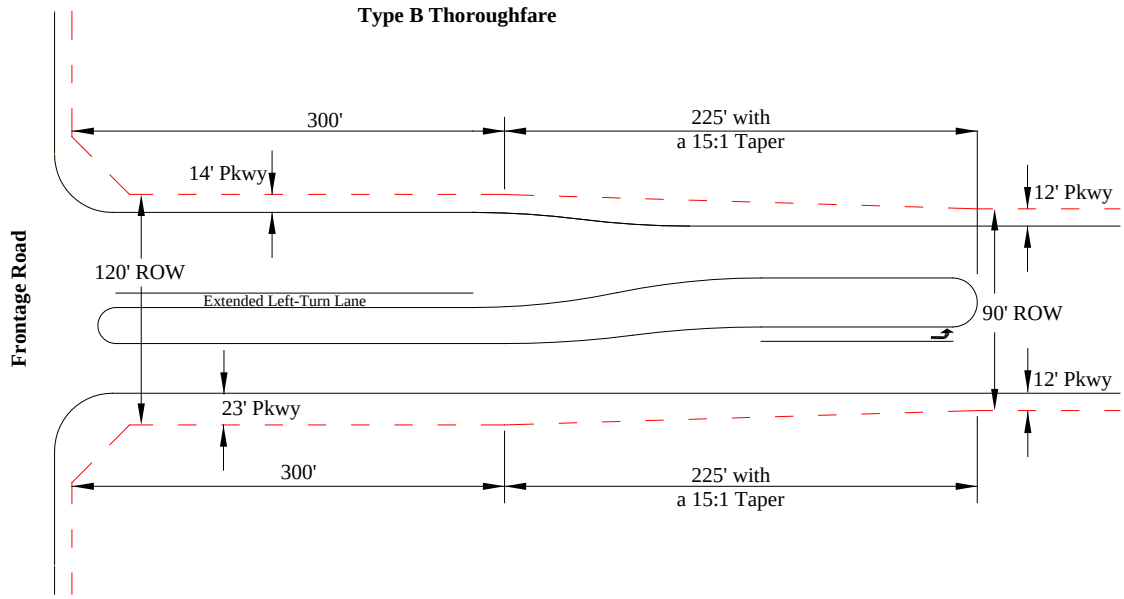

FIGURE 2.5: Type B Thoroughfare Intersection with Frontage Road

F. Roundabouts

1. Roundabouts may be considered for the intersection of Type B, C, D, E, F, or G thoroughfares with Type C, D, E, F, or G thoroughfares. Roundabouts shall not be installed at a Type A-A, A-B, or B-B intersection without a detailed traffic simulation and cost-benefit analysis approved by the Director of Engineering Services. Roundabouts shall not be installed along a six-lane Type A thoroughfare.

2. Roundabouts on private property that connect to a private street or to a fire lane shall be designed to the standards in these design requirements.

3. Roundabouts shall be designed to accommodate a City fire truck making all possible entry and exit movements. A fire truck shall be able to make the "through" movement without traveling on a truck apron.

4. Roundabouts shall include the typical features of a modern roundabout shown in Figure 2.6 and described in these design requirements.

5. The curb surrounding the central island shall be six inch (6") vertical curb if a truck apron is provided and six inch (6") mountable curb if no truck apron is provided. The curb surrounding a truck apron shall be three inch (3") mountable curb. The curb surrounding all faces of each splitter island shall be four inch (4") mountable curb.

6. The inscribed circle radius shall be a minimum of fifty five feet (55') and a maximum of eighty feet (80') for a single lane roundabout, and a minimum of seventy-five feet (75') and a maximum of a hundred feet (100') for a two-lane roundabout.

7. The circulatory roadway shall have a minimum width of sixteen feet (16'), face-to-face. The circulatory roadway shall be at least as wide as the maximum entry width at the roundabout. If the circulatory roadway is less than twenty nine feet (29') wide, face-to-face, a truck apron shall be provided. The combined width of the circulatory roadway and the truck apron shall be a minimum of twenty nine feet (29'). Truck aprons shall provide a solid surface of concrete pavers that are a contrasting color compared to the pavement of the circulatory roadway and shall not give the appearance of being a sidewalk.

8. Single lane entries and exits shall be a minimum of sixteen feet (16') wide, face to face. Two-lane entries and exits shall be a minimum of twenty four feet (24') wide, face to face.

9. Splitter islands shall provide a solid surface of concrete pavers unless the entry and exit on the same leg of the roundabout are both at least twenty four feet (24') wide, face-to-face. The pavers shall be a contrasting color compared to the street pavement and no signs shall be installed in the splitter island. If pavers are not required, the splitter island can contain landscaping provided it does not interfere with the necessary sight distance.

10. Crosswalks shall pass through or in advance of each splitter island.

11. All streets, fire lanes, and approved driveways shall intersect radially with a roundabout. Residential driveways shall not intersect with a roundabout.

12. Landscaping and/or monuments within the central island are encouraged, but shall be limited so that the minimum sight distances described in FHWA's *Roundabouts: An Informational Guide* are provided at the roundabout. For vehicles approaching the roundabout, this includes

the approach stopping sight distance to the crosswalk or the yield line, the stopping sight distance to the crosswalk on the next exit, and the intersection sight distance to circulating vehicles and vehicles entering at the immediate upstream entry. For circulating vehicles, this includes the stopping sight distance on the circulatory roadway.

13. Parking is prohibited within a roundabout.

14. On any approach to a roundabout, driveways, alley connections, and on-street parking shall not be permitted between the crosswalk and the yield line nor along any portion of street that contains a splitter island.

15. The ROW for a roundabout shall extend a minimum of twelve feet (12') beyond the back of its outer curb. The ROW for any street entering the roundabout will flare out as the street flares so that a minimum of twelve feet (12') is provided beyond the back of curb on each side of the street.

16. The roundabout entries and exits and the pavement contained within the inscribed circle radius shall be constructed on a uniform plane of the same grade, which shall not exceed two percent (2%). Roadway approaches to the roundabout shall have a maximum slope of two percent (2%) for a distance of at least two hundred feet (200') for Type B thoroughfares and at least one hundred feet (100') for Type C, D, E, F, and G thoroughfares.

17. Roundabouts shall be illuminated by street lights as described in FHWA's *Roundabouts: An Informational Guide*.

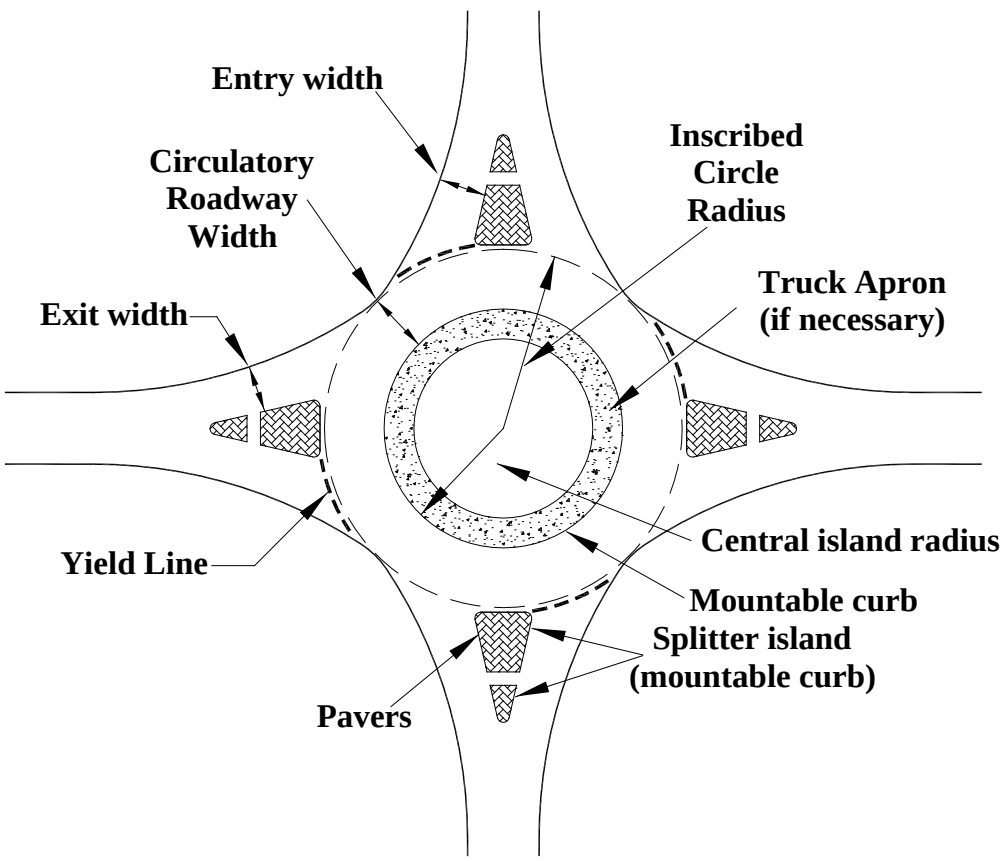

FIGURE 2.6: Typical Roundabout

G. Residential Frontage

1. Residential lots shall not front onto a Type A, B, or C thoroughfare or a residential collector unless parallel access roads are provided. The minimum distance between adjacent curbs of the thoroughfare and the access road shall be twenty feet (20'). Access road ROW shall be in addition to the thoroughfare ROW and access roads shall not connect to the adjacent thoroughfare.

2. Residential lots shall not front onto a Type D, E, F, or G thoroughfare within one hundred feet (100') of the ROW line of the nearest Type A or B thoroughfare.

3. Residential lots shall not front onto any portion of a Type D, E, F, or G thoroughfare that is part of a residential collector, which is a street that connects to a Type A or B thoroughfare and extends into a neighborhood for more than six hundred feet (600') without changing direction (see Section 2.02.I.5).

4. Residential lots shall not front onto a roundabout. Residential lots adjacent to roundabouts shall be oriented so that their houses do not face the roundabout and their driveways do not intersect with the roundabout or along any section of street with a splitter island.

H. Partial Streets

1. Longitudinal partial dedications of Type A and B thoroughfares shall be permitted when only one side of a future thoroughfare is being developed. In such a case, one-half of the total right-of-way shall be dedicated and a minimum of twenty four feet (24') of pavement, face-to-face, shall be constructed.

2. Longitudinal partial dedications of Type C, D, E, F, or G thoroughfares shall be prohibited, except when essential to the reasonable development of a property in conforming with the requirements of the Subdivision Ordinance, and where the Planning & Zoning Commission finds that it will be practical to require the dedication of the other portion of the street when the adjoining property is developed. Whenever a partial street exists along a common property line, the other portion of the street shall be dedicated when the adjoining property is subdivided or developed. Where a partial street is being dedicated along a common property line and the ultimate planned ROW width is sixty feet (60'), the first ROW dedication will be thirty-five feet (35').

   a. The developer shall construct a minimum of twenty four feet (24') of pavement, face-to-face, for all Type C or D thoroughfares that are partial streets at the time of development.

   b. The developer shall construct the full width of pavement face-to-face for all Type E, F, or G thoroughfares that are partial street dedications at the time of development.

I. Street Lengths

1. Type A, B, and C thoroughfares have no street length restrictions. Residential streets (Type D, E, F, and G thoroughfares in a single-family, duplex, or townhome neighborhood) shall have street length restrictions to discourage speeding and cut-through traffic.

2. A residential street that intersects with a Type A or Type B thoroughfare and has residential lots fronting any portion of the street shall not exceed a maximum length of six hundred feet

(600') measured from the Type A or Type B thoroughfare ROW line. Such an entrance street shall be a minimum of thirty feet (30') wide, face to face, or be divided according to Section 2.03.B.7. On each side of the entrance street, at least one cross street shall have a minimum width of thirty feet (30'), face to face, between the entrance street and the first intersection that provides access deeper into the subdivision. See Figure 2.7 for an example.

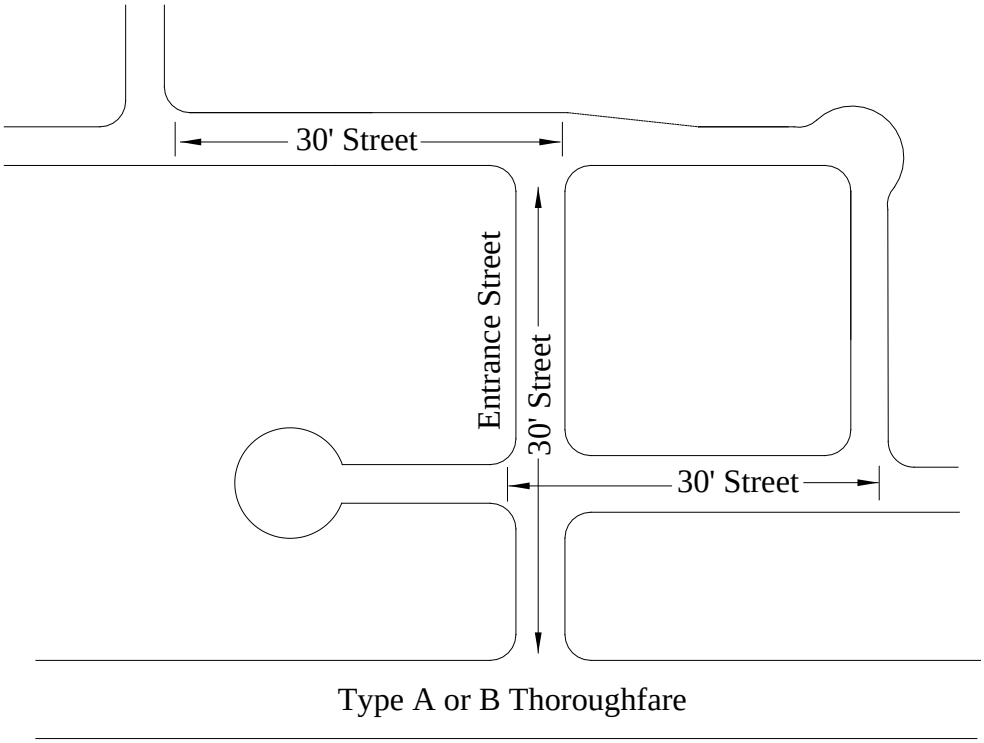

FIGURE 2.7: Example of 30' Entrance Street Requirements

3. Residential streets that do not intersect with a Type A or Type B thoroughfare shall not exceed one thousand two hundred feet (1,200') in length before changing direction. A change in direction occurs when one of the following elements is used:

   a. A horizontal curve radius of three hundred fifty feet (350') for a Type D thoroughfare or of two hundred fifty feet (250') for a Type E, F, or G thoroughfare that changes the course of the street between ninety (90°) and one hundred twenty degrees (120°) (see Figure 2.8). A tangent that is a minimum of one hundred feet (100') long shall be provided between reverse curves.

   b. A street offset using two elbow intersections, each between ninety (90°) and one hundred twenty degrees (120°). The minimum distance between reverse elbows shall be one hundred fifty feet (150'). See Figure 2.9.

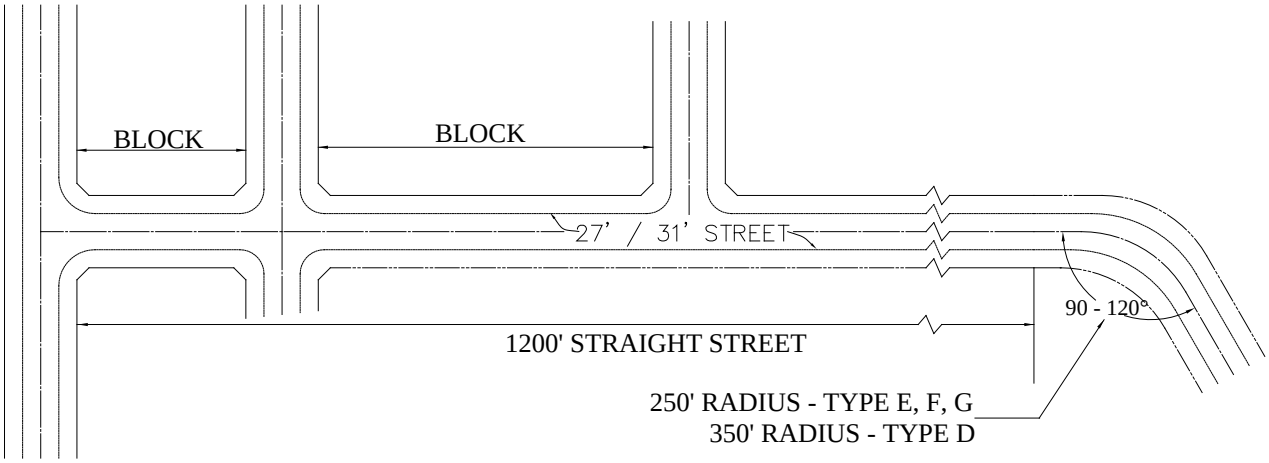

FIGURE 2.8: Change in Street Direction: Curve

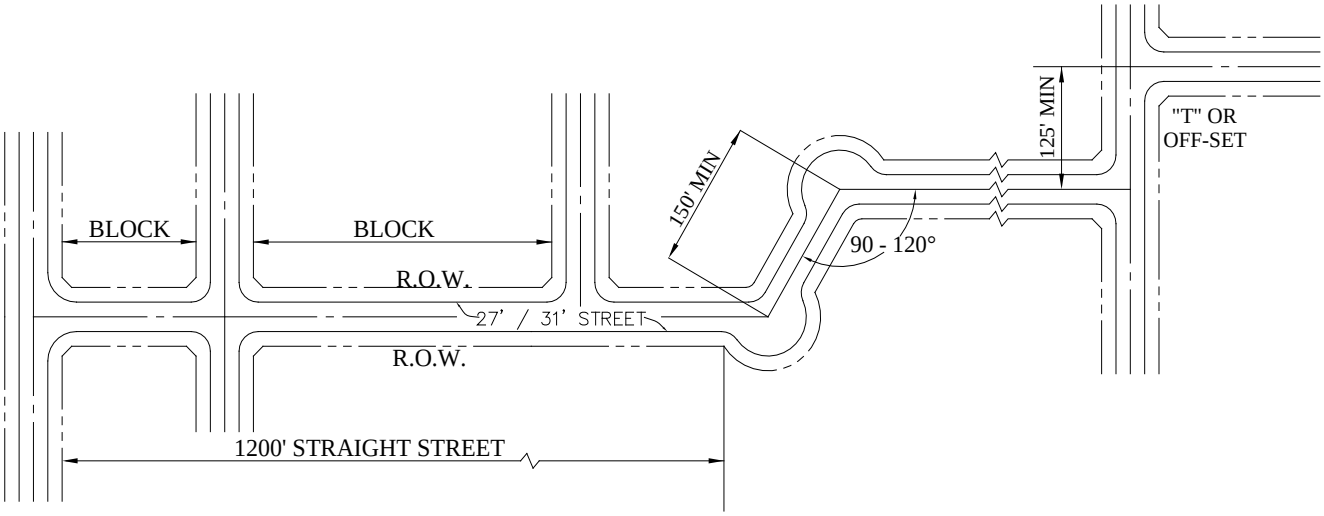

FIGURE 2.9: Change in Street Direction: Offset

4. Residential streets that do not intersect with a Type A or B thoroughfare may extend to a length of one thousand eight hundred feet (1,800') without a change in direction when one of the following is provided:

   a. A zipper street with a twenty two foot (22') wide travel section with parking cut-outs that are nine feet (9') wide and forty-four feet (44') to eighty-eight feet (88') long and a tree island between the parking cut-outs that is a minimum of thirty feet (30') long and nine feet (9') wide. Parking cut-outs shall be offset from parking cut-outs on the opposite side of the street. A tree shall be planted in each tree island per the requirements in the Zoning Ordinance. Front entry homes are prohibited on this type of street. See Figure 2.10.

b. A Type G residential street with street trees, block lengths that do not exceed seven hundred feet (700'), and at least one four-leg intersection. See Figure 2.11.

c. A roundabout installed at one or more of the intersections along the street, not counting a roundabout installed at the start or end point of the street.

5. A residential collector shall have no street length restriction provided that no residential lots front onto any part of the collector and the collector shall not have any straight sections exceeding one thousand feet (1,000'). A residential collector is a street that connects to a Type A or B thoroughfare and extends into a neighborhood for more than six hundred feet (600') without changing direction. A residential collector shall be constructed with the cross section of a Type D, F, or G thoroughfare.

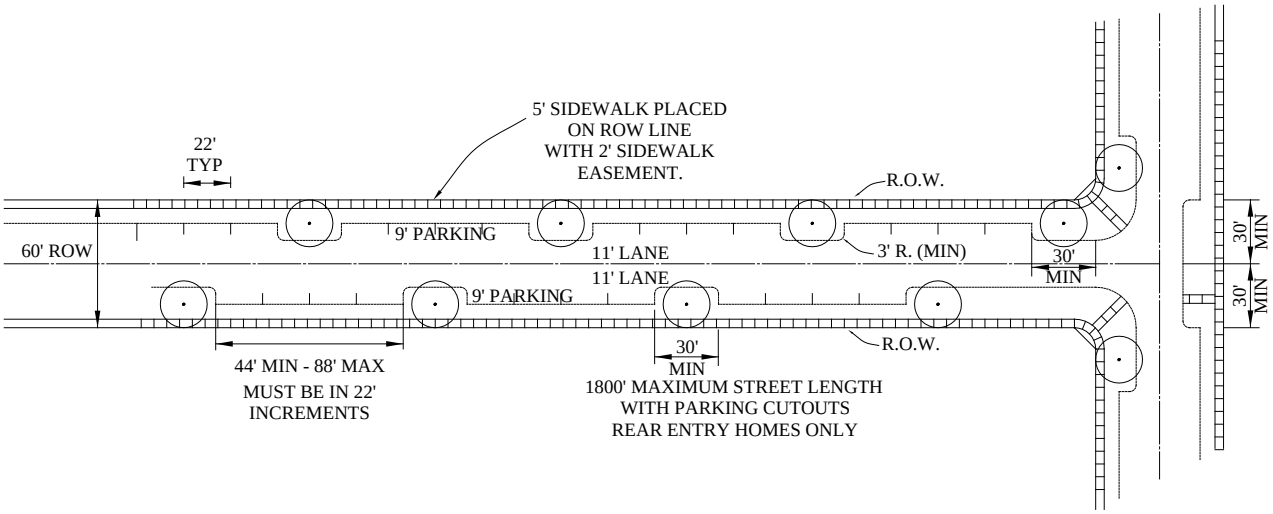

FIGURE 2.10: Maximum Street Length: Zipper Street

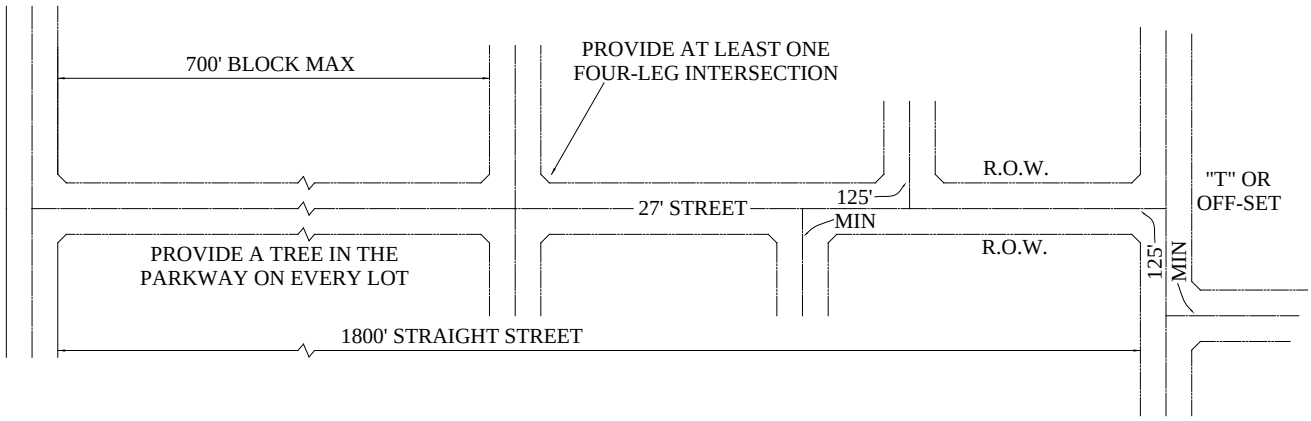

FIGURE 2.11: Maximum Street Length: Short Blocks, Trees and a Four-Leg Intersection

J. Block Requirements

1. Block Length – Blocks shall not exceed one thousand two hundred feet (1,200') in length, measured from street ROW line to street ROW line. In the case of non-rectangular blocks, each side of the block with lots fronting it shall not exceed one thousand two hundred feet (1,200'), measured between the vertices formed by the extension of ROW lines at each corner of the block. Blocks shall be further restricted so that they shall contain no more than twenty (20) lots on one side. Blocks with a continuous series of lots longer than one thousand two hundred feet (1,200'), measured along one or more sides, may be required to be bisected by a pedestrian easement and a sidewalk (see Section 2.06.B.14).

2. Block Width – Blocks shall be wide enough to allow two (2) tiers of lots and shall have a block width no less than two hundred feet (200'), except when only one tier of lots is possible due to the size of the property or the need to back up to a Type A or B thoroughfare.

2.03 Median, Left-Turn Lane, Right-Turn Lane, Deceleration Lane, and Island Design

A. Required Median Openings and Left-Turn Lanes

1. Median openings on divided thoroughfares shall be required at all street intersections. Median openings may be constructed to serve non-residential drives provided that the minimum spacing requirements herein are met. Left-turn lanes are required for each street or driveway that connects to a median opening. The design of median openings and left-turn lanes shall accommodate potential future left-turn lanes that might serve undeveloped land.

2. All non-residential lots on a divided thoroughfare shall have direct or indirect access to a median opening. Indirect access shall be provided through a series of fire lane and access easements.

3. Multi-family developments on a divided thoroughfare shall have direct access to a median opening.

4. The City can modify, relocate, or remove any existing or planned median opening to facilitate traffic flow and/or preserve the health, safety and welfare of the Public, as reasonably determined by the Director of Engineering Services utilizing recognized industry standards as they exist, may be amended, or in the future arising.

B. Minimum Left-Turn Storage, Taper Length, and Median Opening Width, Location, and Spacing Requirements

1. Left-Turn Lane Storage

a. All single left-turn lanes constructed on divided thoroughfares of ultimate cross section width shall be a minimum of eleven feet (11') wide. Where double left-turn lanes are provided, each left-turn lane shall be a minimum of ten feet (10') wide.

b. All left-turn lanes constructed as future through lanes on divided thoroughfares shall be twelve feet (12') wide for the entire storage and taper length requirements as listed in Table 2.5.

c. Minimum storage requirements are listed in Table 2.5. Storage requirements may be increased by the City based upon actual and projected traffic demands of the properties that will be served by the left-turn lane.

d. Left-turn lanes will be delineated by using the City's current Pavement Markings and Markers standard details.

e. Concrete pavers shall be required in the median where the median width is six feet (6') or less, back of curb to back of curb. If the median width is greater than six feet (6'), then concrete pavers shall be required for a minimum distance of ten feet (10') from the median nose. See Figure 2.12.

2. Taper Length – The taper specifications for left-turn lane entrance areas are specified in Table 2.5. The variables used for the specifications are shown in Figure 2.12.

TABLE 2.5: Minimum Left-Turn Lane Design Requirements

Type of Thoroughfare On	Type of Thoroughfare At	Turn Lane Width(s) (ft)	Length of Full-Width Storage(ft)	Taper Specifications		
				Length(ft)	R_1(ft)	R_2(ft)
A	A, B	10(1)(4)	150,250(2)	200	505	505
B	A, B	11	150	100	250	250
A, B	C, Residential Collector	11(4)	150	100	250	250
A, B	D, E, F, G	11(4)	100(3)	100	250	250
A, B	Non-Residential Driveway	11(4)	150	100	250	250
TxDOT Road	A,B,C,D,E,F, G and Non-Residential Driveway	See TxDOT's *Roadway Design Guide* and Specifications(5)				
Frontage Road	A,B,C,D,E,F, G and Non-Residential Driveway	Apply Type A Thoroughfare specifications to Dallas Pkwy Apply TxDOT specifications to SH 121 and US 380				

1. Double left-turn lanes
2. 150 feet for the inside left-turn lane; 250 feet for the outside left-turn lane
3. 150 feet of storage shall be required for gated communities.
4. Left-turn lanes that will become a future through lane shall be twelve feet (12') in width and be square at the end and incorporate a street header.
5. Turn lane designs on Preston Road (SH 289) shall also meet the requirements set forth in the Preston Corridor Access Management Plan.

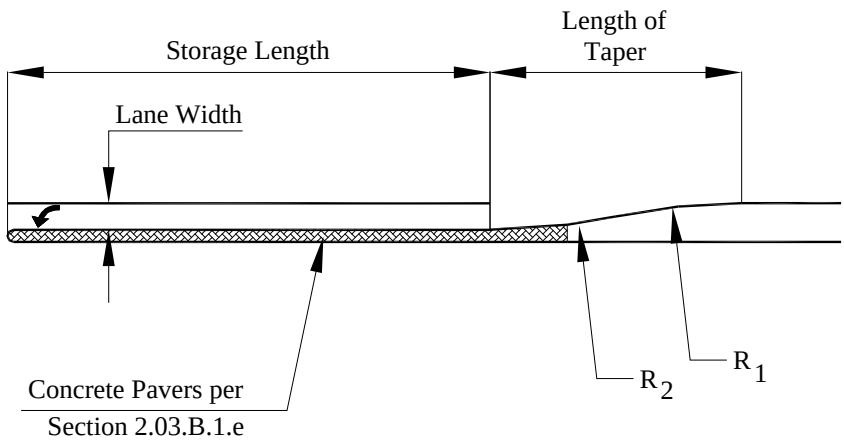

FIGURE 2.12: Typical Left Turn Lane Dimensions

3. Median Openings

   a. Median openings shall accommodate all turning paths and crosswalks.

   b. The width of mid-block median openings shall not be less than sixty feet (60'). They may be greater than sixty feet (60') where necessary to accommodate turning paths and crosswalks subject to approval by the Director of Engineering Services.

   c. Median openings shall not be less than seventy feet (70') wide at divided high capacity driveways (see Section 2.05.B.5).

4. The minimum distance to the first mid-block median opening along a Type A or B thoroughfare that is immediately downstream from a Type A or B thoroughfare is shown in Figure 2.13. This distance varies from three hundred fifty feet (350') to six hundred feet (600'), measured nose to nose, depending on the thoroughfare type and the type of mid-block opening.

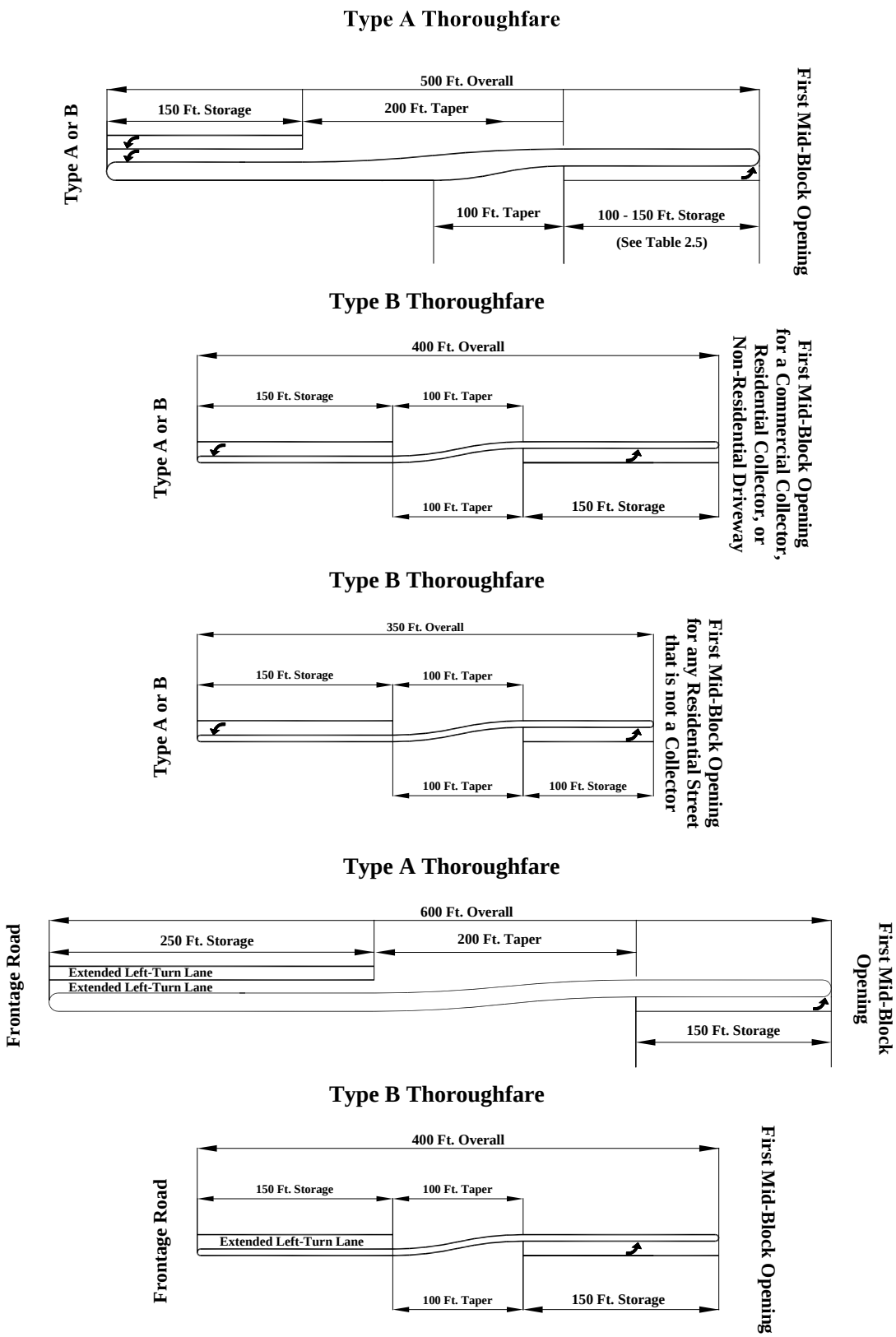

FIGURE 2.13: Minimum Spacing between Type A or B Thoroughfares and First Mid-Block Median Opening on a Type A or B Thoroughfare

5. The minimum distance between median openings on a Type A or B thoroughfare where left-turn storage is provided in both directions for Types C, D, E, F, and G intersecting thoroughfares and driveways is shown in Figure 2.14. The distances shown are measured nose to nose. Refer to Table 2.11 for driveway design requirements.

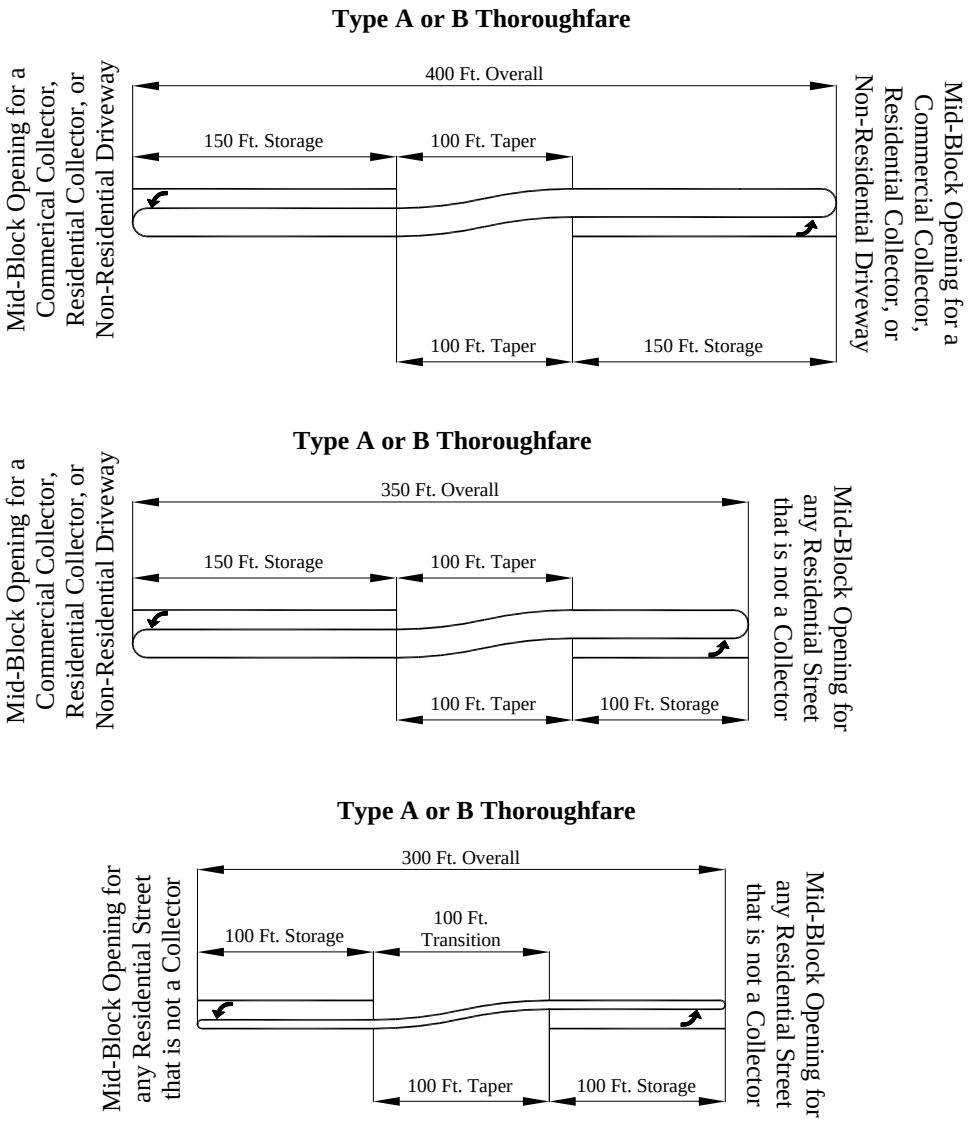

FIGURE 2.14: Minimum Distance between Mid-Block Median Openings on a Type A or B Thoroughfare

6. Medians without Left-Turn Lanes in Both Directions

   a. If a left-turn lane is required in only one direction, the minimum length of the median shall be the sum of the required left-turn storage, taper length, fifty foot (50') tangent, and length of median nose. This requirement is reflected in Figure 2.15. This median design is only allowed if access is not compromised for vacant property on the opposite side of the thoroughfare.

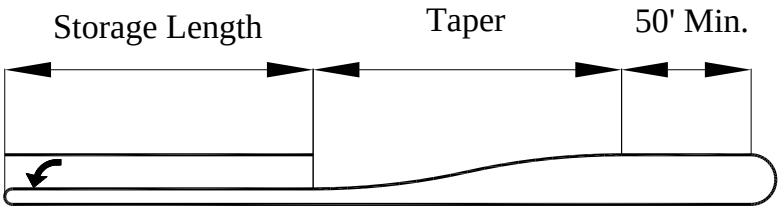

FIGURE 2.15: Minimum Length of Median Where A Left-Turn Lane is Needed in Only One Direction

b. If the left-turn storage is not required in either direction, but the median is simply a spacer between two median openings, the minimum length of the spacer must be one hundred feet (100') (see Figure 2.16). A minimum spacing of one hundred feet (100') from the median opening to the first non-residential driveway shall be maintained.

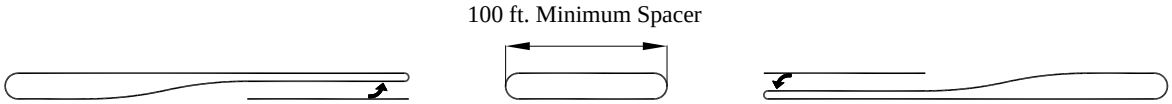

FIGURE 2.16: Minimum Spacer Length

c. If a driveway is not served by a left-turn lane, then seventy-five feet (75') of separation shall be provided from edge of driveway to the median opening.

7. Medians on Public Street Entrances to Developments

a. Medians installed on undivided thoroughfares at entrances to subdivisions for aesthetics or any other purpose shall be a minimum of thirteen feet (13') wide and one hundred feet (100') long (see Figure 2.1 for Divided Residential Subdivision Entrance cross section).

b. A divided residential subdivision entrance shall transition to the normal residential street width upstream or downstream of the first street intersection. No part of the transition shall occur within an intersection.

c. If specified by zoning, alternative design standards may be required for these types of subdivision entrances.

C. Minimum Right-Turn Storage and Taper Length

1. Right-Turn Lane Storage

a. At all intersections on Type A and B thoroughfares, right-turn lanes shall be constructed at the time of development.

b. All right-turn storage areas shall be eleven feet (11') wide.

c. Additional ROW shall be required adjacent to right-turn lanes so that there is a minimum of ten feet (10') of ROW from the back of curb.

d. Right-turn lanes will be delineated by using the City's current Pavement Markings and Markers standard details.

e. Minimum storage requirements are listed in Table 2.6. Storage requirements may increase based upon actual and projected traffic demands.

f. A minimum tangent section of thirty feet (30') shall be provided between the preceding driveway or cross street curb return and the taper of a right-turn lane.

2. Taper Length – The taper specifications for right-turn lane entrance areas are specified in Table 2.6. The variables used for the specification are shown in Figure 2.17.

TABLE 2.6: Minimum Right-Turn Lane Design Requirements

Type of Thoroughfare On	Type of Thoroughfare At	Turn Lane Width(s) (ft)	Length of Full-Width Storage(ft)(1)	Taper Specifications(2)		
				Length(ft)	R_1(ft)	R_2(ft)
A	A, B	11	225	150	515	515
B	A, B	11	175	150	515	515
A, B	C, Residential Collector	11	150	110	280	280
A, B	D, E, F, G	11	100	110	280	280
TxDOT Road	A,B,C,D,E,F,G	See TxDOT's *Roadway Design Guide* and Specifications				
Frontage Road	A,B,C,D,E,F,G	Apply Type A Thoroughfare specifications to Dallas Pkwy Apply TxDOT specifications to SH 121 and US 380				

1. Measured from the intersecting thoroughfare face of curb.
2. No driveways are permitted within the taper area.

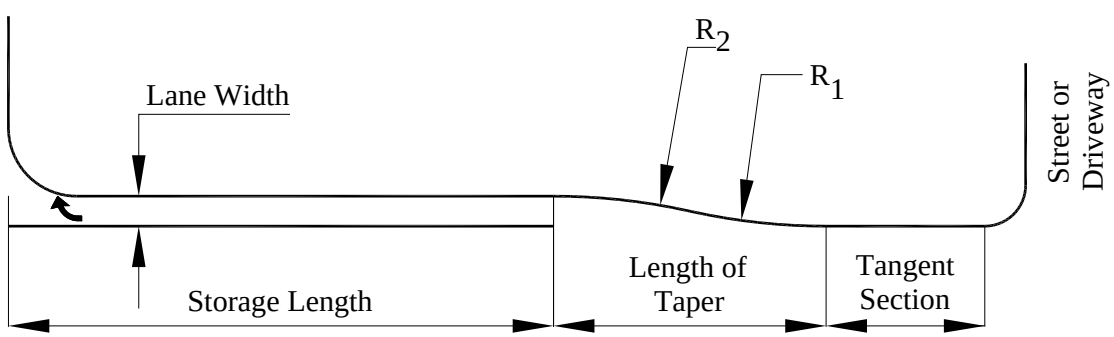

FIGURE 2.17: Typical Right-Turn / Deceleration Lane Dimensions

D. Minimum Deceleration Lane Storage and Taper Length

1. Deceleration Lane Storage

   a. Deceleration lanes are required on Type A and B thoroughfares at all non-residential and multi-family driveways.

   b. All deceleration lane storage areas shall be eleven feet (11') wide.

   c. In locations where there will be less than ten feet (10') of ROW adjacent to the deceleration lane, a street easement shall be dedicated such that the combination of ROW and street easement extends at least ten feet (10') from the back of curb of the deceleration lane. Street easements shall extend along the street a minimum of forty feet (40') beyond the far edge of the driveway to allow for utility connections.

   d. Deceleration lanes will be delineated by using the City's current Pavement Markings and Markers standard details.

   e. Minimum storage requirements are listed in Table 2.7. Storage requirements may increase based upon actual and projected traffic demands.

   f. A minimum tangent section of thirty feet (30') shall be provided between the preceding driveway or cross street curb return and the taper of a deceleration lane.

   g. A tangent section is not required when a deceleration lane is immediately downstream from an intersecting Type A or Type B thoroughfare.

2. Taper Length – The taper specifications for deceleration lane entrance areas are specified in Table 2.7. The variables used for the specification are shown in Figure 2.17.

TABLE 2.7: Minimum Deceleration Lane Design Requirements

Type of Thoroughfare On	Type of Thoroughfare At	Turn Lane Width(s) (ft)	Length of Full-Width Storage(ft)(1)	Taper Specifications		
				Length(ft)	R_1(ft)	R_2(ft)
A	Non-Residential Driveway	11	110(2)	110(2)	280	280
B	Non-Residential Driveway	11	90	110(2)	280	280
TxDOT Road	Non-Residential Driveway	See TxDOT's *Roadway Design Guide* and Specifications				
Frontage Road	Non-Residential Driveway	Apply Type A Thoroughfare specifications to Dallas Pkwy Apply TxDOT specifications to SH 121 and US 380				

1. Measured from the edge of the driveway.
2. When a deceleration lane is immediately downstream from an intersecting Type A or B thoroughfare, its storage can be reduced to 100 feet and its taper can be reduced to 70 feet (see Figure 2.23)

E. Cost of Median Openings and Turn Lanes

1. Median openings, left-turn lanes, and right-turn lanes constructed for residential streets and/or subdivision entrances not referenced on the Thoroughfare Plan shall be the responsibility of the developer and shall be constructed to City (or TxDOT) standards and inspected by the governing entity.

2. Median openings, left-turn lanes and deceleration lanes for multi-family and non-residential developments shall be the responsibility of the developer and shall be constructed to City (or TxDOT) standards and inspected by the governing entity.

3. If median openings, left-turn lanes, deceleration lanes or right-turn lanes are not constructed at the time of development, the developer shall escrow funds for such future improvements prior to final acceptance. The escrow amount shall include all costs for engineering, inspection, and construction.

2.04 Alley Design

A. Alley Intersections

1. Alleys shall not intersect any Type A, B, or C thoroughfare nor any residential collector.

2. Alleys that are parallel to and share a common ROW line with a Type A, B, or C thoroughfare or a residential collector shall turn away from that thoroughfare not less than forty feet (40’) or one subdivision lot width (whichever is greater) from the cross street ROW as shown in Figure 2.18.

3. Alleys shall intersect with a residential street so that the alley ROW line is not less than forty feet (40’) or one subdivision lot width (whichever is greater) from the ROW of the nearest cross street as shown in Figure 2.18.

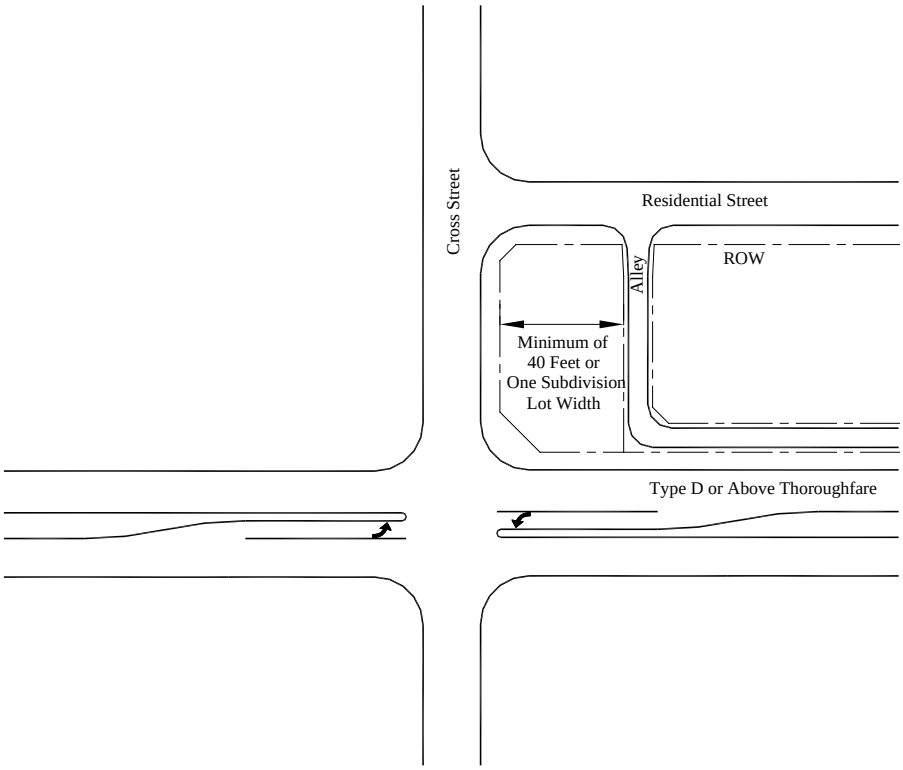

FIGURE 2.18: Minimum Distance from Intersection for Parallel Alley

4. All alley intersections with streets shall be perpendicular or radial, within a five degree (5°) tolerance, at the intersection of the ROW lines.

5. The offset between alleys on opposite sides of a residential street shall be less than three feet (3') or greater than seventy-five feet (75') measured from edge of alley to edge of alley.

6. Alleys shall not align with existing or future streets or driveways on the opposite side of a street. Alleys shall be offset from such a street or driveway by a minimum of seventy-five feet (75') measured from edge of alley to edge of street or driveway.

7. Alleys that intersect at "elbow" street intersections shall not intersect within thirty (30°) degrees of the centerline of the adjacent streets. See Figure 2.19.

8. Alleys shall not intersect with a roundabout.

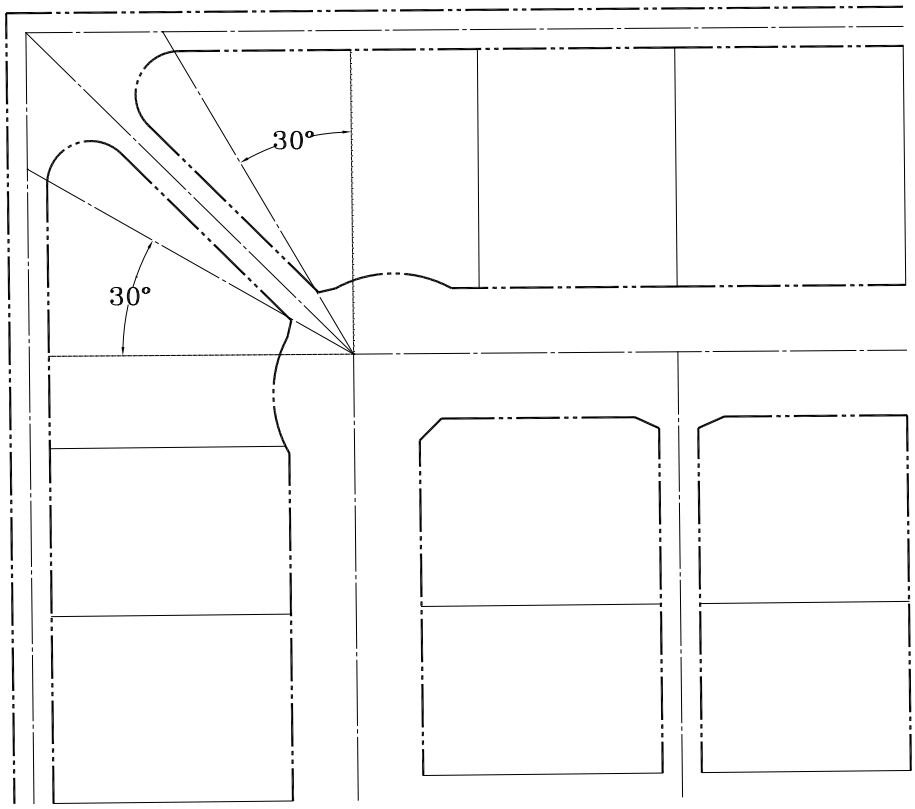

FIGURE 2.19: Alley Intersecting an Elbow

9. Internal alley intersections shall consist of no more than three alley approaches.

10. The offset between alleys on the opposite side of an intersecting alley shall be a minimum of one hundred feet (100') measured from centerline to centerline.

11. As an alley approaches an intersection with another alley, the pavement width shall increase to fourteen feet (14') using a taper twenty feet (20') long. The wider pavement shall be maintained for a distance of fifteen feet (15') prior to the radius of the intersection. Two feet (2') of parkway shall be maintained between the pavement and the ROW line at all times. See Figure 2.20.

12. No permanent dead end alley shall be permitted in new subdivisions. Alleys shall connect and/or be aligned with alleys in adjacent subdivisions.

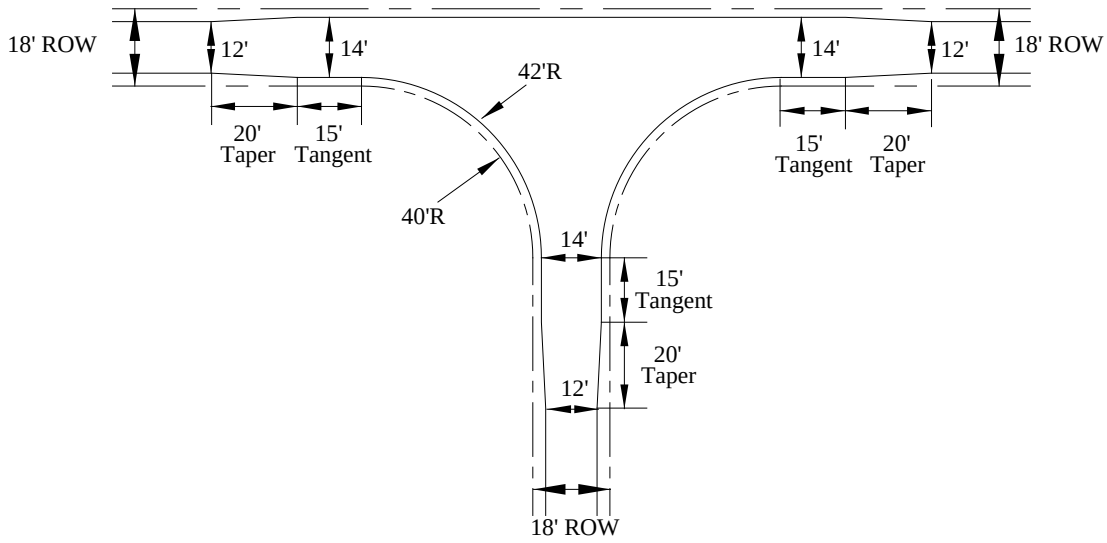

FIGURE 2.20: Alley to Alley Intersection

13. The radius of alley pavement at street intersections shall not be less than fifteen feet (15'). At the intersection of two alleys, the radius of the alley ROW is dependent upon the alley ROW intersection angle as listed in Table 2.8. At the intersection of two alleys, the radius of the alley pavement shall be two feet (2') greater than the radius of the alley ROW.

TABLE 2.8: Alley Intersecting Alley Radius

Alley ROW Intersection Angle	Minimum Required ROW Radius (ft)
1°-40°	70
41° -70°	50
71° -90°	40
> 90°	50

B. Alley ROW Width – Alley ROW shall be eighteen feet (18') wide except for certain townhome developments that are required by the Zoning Ordinance to follow the design standards in the Form-Based Code Manual.

C. Alley Pavement Width – Alley pavement shall be twelve feet (12') wide except near alley intersections, as shown in Figure 2.20, and except near street intersections as shown in Figure 2.21.

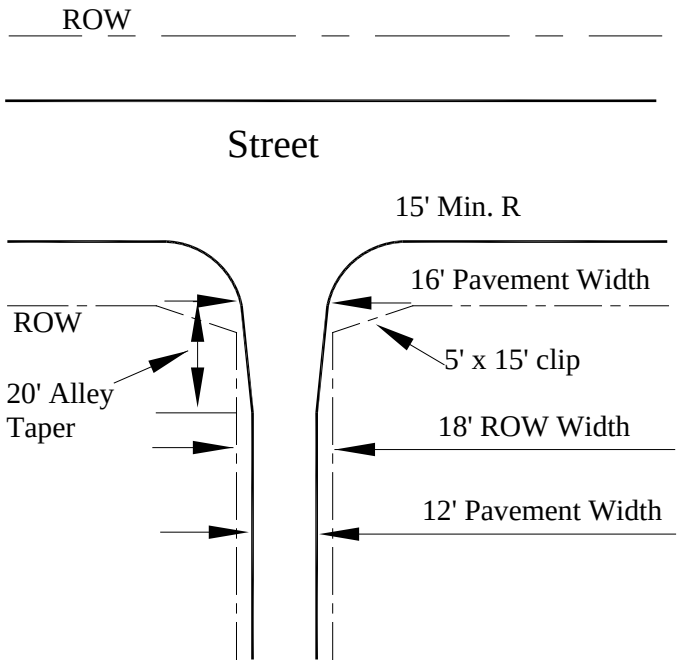

FIGURE 2.21: Alley to Street Intersection

D. Alley Length – Alleys shall not exceed eight hundred feet (800’) in length without an intermediate connection to a residential street.

E. Alley Pavement Thickness – See Section 3 of the Engineering Standards for alley subgrade and pavement design requirements.

F. Alley as Fire Lane – An alley that also serves the purpose of a fire lane shall be constructed to the standards of a fire lane as required by the Fire Department. These standards include, but are not limited to, a minimum pavement width of twenty four feet (24’) and a minimum radius of alley pavement of twenty feet (20’) at street intersections.

G. Rear Alley Frontage – The minimum alley rear frontage shall be twenty feet (20’).

H. Alley Visibility Obstructions

1. No fence, wall, screen, sign, structure, landscaping rock greater than four inches (4”) in height, or foliage of hedges, trees, bushes, or shrubs shall be erected, planted or maintained in any alley ROW.

2. Foliage of hedges, trees, bushes, and shrubs planted adjacent to the alley ROW shall be maintained by the property owner such that the overhang or encroachment shall be no less than fourteen feet (14’) above the alley surface and no less than one foot (1’) outside the edge of the pavement.

I. Alley Grade

1. Alleys shall have a maximum grade of six percent (6%). Steeper grades may be permitted where required by topographical and/or natural features, as approved by the Director of Engineering Services.

2. Alleys shall maintain a maximum cross-slope of two percent (2%) at the intersection of the adjacent sidewalk.

J. Vertical Curves in Alleys – Vertical curves in alleys shall be used in order to provide a design which is safe, comfortable in operation, pleasing in appearance and adequate for drainage. Vertical curve alignment shall also provide stopping sight distance in all cases based on a design speed of 20 mph.

K. Alley Screening Walls – The area between screening walls and alleys shall be paved and graded to drain to the invert.

2.05 Driveway Design

A. Introduction – Driveway design standards are needed to provide safe and efficient vehicular access to and from the public street system, to provide public street capacity for accommodating peak traffic volumes of public streets, to maintain smooth traffic flow, and to maintain street ROW and drainage. The intent of driveway design standards is to achieve the following:

1. Prohibit the indiscriminate location and spacing of driveways while maintaining reasonable vehicular access to and from the public street system.

2. Reduce conflicting turning movements and congestion thereby reducing vehicular crashes.

B. Definition of Driveway Types

1. Residential Driveway – Provides access to a single-family residence, duplex, or multi-family building containing four or fewer dwelling units. Residential driveways shall intersect Type D, E, F, and G thoroughfares only (according to the restrictions described below).

2. Non-Residential Driveway

a. Commercial Driveway – Provides direct access to an office, retail or institutional building, or multi-family building having more than four dwelling units. It is anticipated that such buildings will have incidental truck service. Commercial driveways shall typically access Type A, B, or C thoroughfares only, with a maximum of one (1) driveway accessing a residential collector. In the case of multi-family developments, the primary driveway shall access a Type A or B thoroughfare. Exceptions for connections to residential streets are specified in the Comprehensive Plan.

b. Industrial Driveway – Serves truck movements to and from loading areas of an industrial facility, manufacturing, warehouse, or truck terminal. A retail development may have one or more driveways specially designed, signed, and located to provide access for trucks, which shall be considered industrial driveways. Industrial plant driveways whose principle function is to serve administrative or employee parking lots shall be considered commercial driveways. Industrial drives shall access Type A, B, and C thoroughfares only.

3. Standard Driveway – Provides two-way access at a single, undivided curb opening. The minimum width of a standard driveway depends on land use and is shown in Table 2.9.

4. One-Way Driveway – Provides only inbound or outbound access and can only be permitted when the orientation of on-site circulation and parking layout clearly utilize the driveway for one-way movements. The minimum width for a one-way driveway depends on land use and is shown in Table 2.9.

5. High Capacity Driveways – Intended to provide two-way access with geometric provisions which more adequately respond to greater driveway volumes and/or access limitations than standard driveways. These provisions include increased width, increased internal storage and a median divider.

    a. Divided high capacity driveways are required at the first median opening downstream of a Type A-A, A-B, or B-B intersection.

    b. The primary multi-family driveway shall be a divided high capacity driveway at a median opening.

    c. Divided high capacity driveways are required on Type A or Type B thoroughfares when the number of parking spaces per driveway exceeds two hundred (200), except along a frontage road.

C. Driveway General Design Parameters

1. The centerline angle for a driveway approach shall be ninety degrees (90º) to the street curb line for all driveways.

2. Driveways shall not be permitted in the taper area of any right-turn lane or deceleration lane.

3. Driveways that intersect at a mid-block median opening shall have the driveway centerline intersect with the midpoint of the median opening (measured nose-to-nose).

4. Driveway connections can be required by the Director of Engineering Services to ensure adequate circulation.

5. Driveway elevations at the ROW line of a public street shall be a minimum of six inches (6”) above the street gutter. A residential driveway that intersects an alley shall be a minimum of three inches (3”) above the edge of the alley pavement at the ROW line and shall be high enough to maintain gutter capacity.

6. Cross access is required between adjacent non-residential properties so that each property can share the use of the driveway(s) on the adjacent property. A shared driveway that is centered on the common property line is also encouraged. When one non-residential property develops before the adjacent property develops, the full width of the shared driveway shall be constructed at that time.

7. Driveway grades in a fire lane shall not exceed six percent (6%). Steeper grades may be permitted in areas where buildings are not present, as approved by the Director of Engineering Services and the Fire Department.

8. Driveways that serve as a fire lane shall be a minimum of twenty-four feet (24’) in width.

9. Differential grades on driveways shall not exceed ten percent (10%).

10. Any sidewalk access across a driveway shall meet all state and federal ADA requirements for accessibility.

11. Residential driveways shall be prohibited:

    a. Along a Type D, E, F, or G thoroughfare within one hundred feet (100') of an intersection with a Type A or Type B thoroughfare measured from the ROW line.

    b. Along any part of a Type A, B, or C thoroughfare or a residential collector.

12. Residential driveways shall provide access to an alley or an eligible public street according to the following restrictions:

    a. A residential lot shall be allowed a maximum of one (1) driveway onto a public street, except in the case of a circular driveway approved by the Director of Engineering Services.

    b. A residential driveway that provides access to a garage shall connect to an alley or shall connect to a residential street that is at least thirty feet (30') wide, face-to-face.

    c. A residential lot bordered by an alley and a residential street that is at least thirty feet (30') wide shall provide a driveway to the alley if trash pick-up services cannot be easily provided on the residential street, as determined by the Environmental Services Division. Factors that will be considered include, but are not limited to, trash truck routing and whether existing or planned homes on the block already connect to the alley.

    d. A residential lot shall be prohibited from having multiple driveway connections in a configuration that would create the possibility of a cut-through route between a public street and an alley that do not intersect or between two public streets that do not intersect, as determined by the Director of Engineering Services.

    e. If a residential driveway is shared between two properties, the driveway shall be centered on the common property line unless otherwise approved by the Director of Engineering Services.

    f. A residential driveway connecting to an alley shall not be located within twenty feet (20') of the ROW line of a public street so as to prevent the driveway from being located in the alley taper

    g. A residential driveway connecting to a public street shall be located so its upstream edge is no closer than fifteen feet (15') from the curb return of an upstream intersection and so its downstream edge is no closer than five feet (5') from the curb return of a downstream intersection.

    h. A residential driveway that changes in width as it extends onto the property shall do so with a curved transition or an angled transition that does not exceed a taper of one to one (1:1) within ten feet (10') of the property line.

13. Driveways shall be located so that they meet the required spacing from other driveways and streets, as described in Subsections F, G, and H below. The spacing and location of driveways shall be related to existing driveways and streets and to future driveways and

streets that are shown on approved preliminary site plans and/or site plans that have not expired.

D. Driveway Width – The width of a driveway refers to the width of pavement at the property line and is measured where the curb return radii ends perpendicular to the street curb or edge of pavement. The minimum and maximum widths of driveways are listed in Table 2.9. A driveway may transition to a different width as it extends onto the property, but its width shall not change abruptly at the property line.

TABLE 2.9: Minimum and Maximum Driveway Widths(1)

Driveway Type	Land Use	Width in Feet (face to face)(2)	
		Minimum (ft)	Maximum(ft)
Standard Driveway	Residential	10	24 to a street 32 to an alley(3)
	Commercial	30	36 (40 at a gas station)
	Industrial	30	40
One-Way Driveway	Residential (circular)	10	16
	Commercial	24	24
	Industrial	24	24
Divided High Capacity Driveway	Entrance	24	24
	Exit: Two Lanes	24	24
	Three Lanes	30	36
Driveway Medians		4	11

1. Driveway width at the property line. A driveway may transition to a different width as it extends onto the property.
2. Driveways that serve as a fire lane shall be a minimum of twenty-four feet (24') in width.
3. A residential driveway connecting to an alley may have a width up to a maximum of thirty-two feet (32') if the garage faces onto the alley; otherwise, its width is limited to twenty-four feet (24').

E. Driveway Radius

1. All driveways intersecting dedicated streets shall be built with a circular curb radius connecting the six-inch (6") raised curb of the roadway to the design width pavement of the driveway.

2. Driveway radii shall fall entirely within the subject property so as to begin at the street curb at the extension of the property line.

3. Table 2.10 presents the minimum and/or maximum standards to be applied in designing and locating driveways on public streets.

4. High capacity driveways shall meet the same standards as those defined in Table 2.10.

TABLE 2.10: Driveway Design Requirements

Criteria	Thoroughfare Classification	Residential Driveway (ft)	Commercial or Multi-family Driveway (ft)	Industrial Driveway (ft)
Driveway Curb Radius	Type A	N.A.	30	40
	Type B	N.A.	30	40
	Commercial Collector Type C	N.A.	30	40
	Residential Collector	N.A.	30	N.A.
	Local D, E, F, G	5-10	N.A.	N.A.
Minimum Driveway Spacing Along Roadway (edge to edge)	Type A	N.A.	280	280
	Type B	N.A.	260	260
	Commercial Collector Type C	N.A.	90	90
	Residential Collector	N.A.	max. of 1 drive	N.A.
	Local D, E, F, G	20 (10 when enclosing both mailboxes)(2)	N.A.	N.A.
Minimum Distance to Intersection Along Roadway (edge to ROW line of intersecting street)(1)	Type A	N.A.	75 / 200	75 / 200
	Type B	N.A.	75 / 200	75 / 200
	Commercial Collector Type C	N.A.	100 / 100	100 / 100
	Residential Collector	N.A.	100 / 100	N.A.
	Local D, E, F, G	15 / 5 from curb return to edge of drive	N.A.	N.A.

1. Upstream / downstream distance to intersection. See Figure 2.23.
2. If both mailboxes are located between two driveways, those driveways can be exactly 10 feet apart. If they are more than 10 feet apart, they must be 20 feet apart or more.

F. Driveway Spacing

1. Spacing between driveways is measured along the property line from the edge of one driveway to the closest edge of the next driveway.

2. Table 2.10 defines minimum driveway spacing as a function of thoroughfare classification.

3. In the vicinity of a railroad crossing, the closest edge of a driveway shall be a minimum of one hundred feet (100') from the railroad ROW line.

4. Non-residential and multi-family driveways on opposite sides of an undivided street shall align with each other or be spaced a minimum of seventy-five feet (75') apart, measured edge to edge, to ensure that conflicting movements do not overlap. This spacing shall also apply to a driveway that is on the opposite side of an undivided street from an intersecting street. See Figure 2.22.

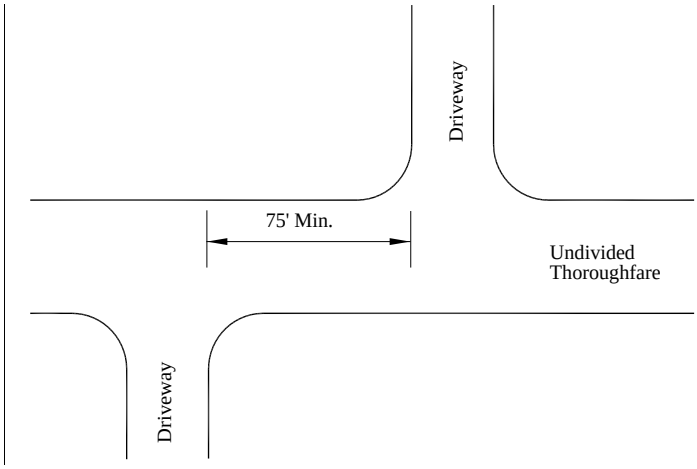

FIGURE 2.22: Driveway Spacing on Opposite Sides of an Undivided Street

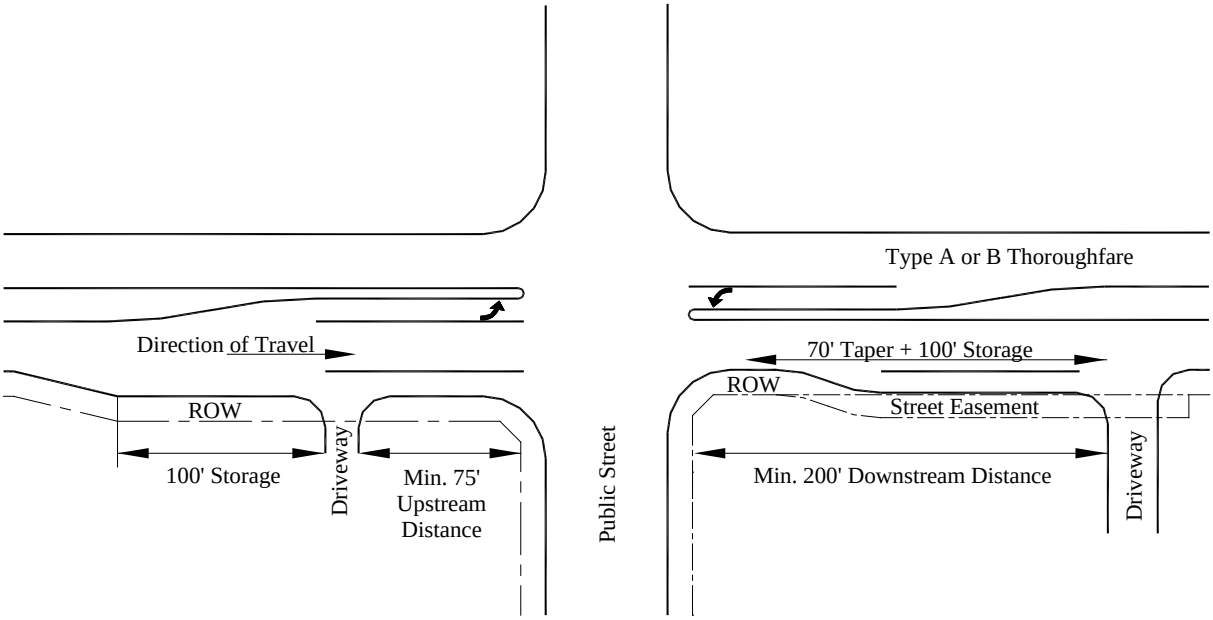

FIGURE 2.23: Distance Between Driveway and Intersection

G. Distance between Driveway and Intersection

1. Adequate distance between cross street intersections and access driveways shall be provided to ensure intersection/driveway conflict areas are minimized.

2. Table 2.10 defines the upstream and downstream distance from an intersection as a function of thoroughfare classification. The distances required from an intersection along a Type A or B thoroughfare are shown in Figure 2.23

H. Driveways Located in Right-Turn Lanes

1. A driveway located within the right-turn lane of a public street intersection shall be spaced so that its closest edge will be a minimum of seventy-five feet (75') in advance of the ROW line of the intersecting street. See Figure 2.23.

2. If a driveway is located within the right-turn lane of a public street intersection, the storage length of the right-turn lane shall extend a minimum of one hundred feet (100') beyond the upstream edge of the driveway (see Figure 2.23). No driveway shall be permitted within the taper area of a right-turn or deceleration lane.

I. Driveway Deceleration Lanes - Deceleration lanes are required on Type A and B thoroughfares at all non-residential and multi-family driveways and shall meet the requirements of Section 2.03.D.

J. Driveway Storage Lengths

1. On-site internal storage shall be provided at all non-residential and multi-family driveways for queuing of vehicles off-street, to minimize congestion, and increase safety both on the public street and within the driveway.

2. Internal storage requirements shall be based on the number of parking spaces accessible by the affected driveway. Divide the total number of parking spaces by the number of driveways and then use Table 2.11 to determine the amount of internal storage required. This calculation shall be based on the preliminary site plan for an overall development or the site plan for a specific lot, whichever produces the largest ratio of parking spaces per driveway.

3. Internal storage length shall be measured from the ROW line to the first intersecting aisle, internal driveway, or parking stall.

4. A circulation study will be required for all multi-story parking structures. Driveway storage requirements will be determined as a result of the study.

TABLE 2.11: Minimum Driveway Storage Lengths

Parking Spaces per Driveway	Storage Required (ft)			
	Multi-family or Commercial Uses		Industrial Land Uses	
	Non-Median Opening(1)	Median Opening(2)	Non-Median Opening(1)	Median Opening(2)
Less than 25	25	25	25	25
25-50	25	40	25	40
51-100	25	40	40	40
101-200	40	80	40	60
More than 200	100	150	40	100

1. Includes driveways that connect to one-way frontage roads.
2. Includes any driveway where a left-turn exit can be made, including driveways that connect to undivided roadways.

K. Entrance Streets and Driveways for Gated Developments

1. To ensure that the minimum dimensions are adequate, a traffic study is required with the submission of a Specific Use Permit application for all gated communities.

2. Residential/Multi-family Developments

   a. Gated developments shall have a median divided street or driveway that will allow for a vehicular turn-around prior to the gate in the event that access is denied.

   b. The turn-around shall be a minimum of eighteen feet (18') in width.

   c. Entry gates shall be set back from the ROW line a minimum of one hundred thirty five feet (135') or as indicated in the traffic study. The card reader, or first stop, shall be set back from the ROW line a minimum of one hundred feet (100'), or as indicated in the traffic study, to provide storage for the longest queue of vehicles expected to access the gate. See Figure 2.24.

   d. Each direction of the divided street or driveway shall be a minimum of twenty-four feet (24') in width with curb radii of thirty feet (30'). See Figure 2.24.

   e. The hinge point of the gate shall be a minimum of eighteen inches (18") behind back of the curb. The gate shall open to twenty-four inches (24") behind back of curb.

   f. Gates shall open sideways or swing open in the direction of travel on each side of the divided street.

   g. Gates shall be equipped with emergency access devices as required by the Fire Department.

   h. All gates shall provide pedestrian access. The movement of the gates shall not encroach on sidewalks.

   i. Gates shall remain open between 7:00 a.m. and 7:00 p.m. whenever a guard is not on-duty during that time.

   j. Any alternative designs shall require the approval of the Director of Engineering Services.

3. Non-Residential Developments

   a. Gated developments shall have a median separating ingress and egress traffic flow allowing for a vehicular turn-around prior to the gate in the event that access is denied.

   b. The turn-around shall be a minimum of eighteen feet (18') in width.

   c. Entry gates shall be set back from the ROW line, or fire lane, a minimum of seventy-five feet (75'), or as indicated in the traffic study. The card reader, or first stop, shall be set back from the ROW line a minimum of forty feet (40'), or as indicated in the traffic study, to provide storage for the longest queue of vehicles expected to access the gate.

   d. Each direction of the driveway shall be a minimum of twenty-four feet (24') in width with curb radii of thirty feet (30'). See Figure 2.24.

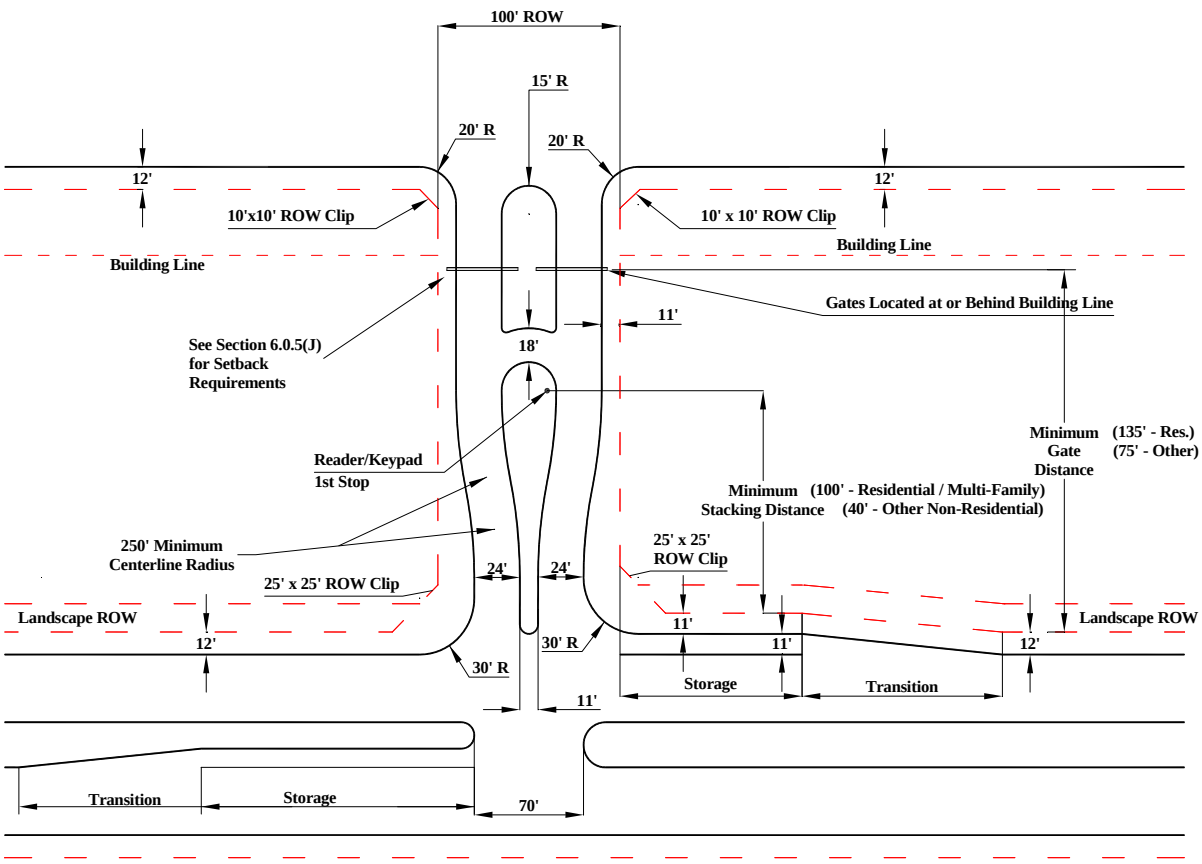

FIGURE 2.24: Gated Entrance Detail

e. The hinge point of the gate shall be a minimum of eighteen inches (18”) behind back of the curb. The gate shall open to twenty-four inches (24”) behind back of curb.

f. Gates shall open sideways or swing open in the direction of travel on each side of the divided entrance.

g. Gates shall be equipped with emergency access devices as required by the Fire Department.

h. All gates shall provide pedestrian access. The movement of the gates shall not encroach on sidewalks.

4. Individual gated single-family residences shall have a minimum setback of twenty feet (20’) from the property line. The movement of the gate(s) shall not encroach on a sidewalk, alley, or street.

L. Non-Conforming Driveways

1. All nonconforming driveways on a lot, tract, parcel or site shall be allowed to remain in use until the occurrence of one or more of the following events:

a. A change in use, or an increase in intensity of use, occurs such that the site requires a ten percent (10%) increase in required parking spaces.

b. Addition or expansion of required stacking spaces.

c. Any modification that changes the design or function of the existing driveway.

d. The addition of a median opening on the public street by a developer. All driveways that are served by the new median opening shall comply with the requirements of these standards.

2. Upon the occurrence of the events described above, the nonconforming driveway shall either be reconstructed in accordance with these design requirements, or eliminated.

2.06 Sidewalk Location and Design

A. Definition of Sidewalk – A sidewalk is defined as the paved area designated for pedestrian use which is generally located between the curb of the roadway and the adjacent property line. The inside edge of the sidewalk is the edge closest to the street while the outside edge of the sidewalk is farthest from the street.

B. Sidewalk Design – Sidewalks shall conform to the most current federal, state, and local ADA requirements and to the following standards:

1. Sidewalk Grade – The maximum grade of the sidewalk shall be five percent (5%) or the grade of the adjacent street, whichever is greater. The maximum cross-slope of the sidewalk shall be two percent (2%).

2. Zoning Classification Requiring Sidewalks – Concrete sidewalks designed and located according to City standards shall be constructed along all streets in all zoning classifications except agriculture uses in agricultural zoned areas. Prior to developing any single-family, duplex, or townhome residential lots, residential developers shall build sidewalks along all streets adjacent to the subdivision and along the portions of any street within the subdivision where residential lots do not front or side onto the street. Sidewalks along residential lots shall be constructed by the homebuilder at the time each lot develops. Sidewalks adjacent to non-residential and multi-family land uses shall be built at the time of lot development.

3. Hike and Bike Master Plan – Sidewalks shall be constructed with the width specified in the Hike and Bike Master Plan along thoroughfares that are designated as off-street hike and bike trail routes.

4. Type A and B Thoroughfares – A concrete sidewalk, a minimum six feet (6’) in width, shall be located along all Type A and B thoroughfares. The sidewalk should typically be located within the street ROW, but may extend into a sidewalk easement. The inside edge of the sidewalk shall be no closer than five feet (5’) from the back-of-curb.

5. Type C, D, E, F, and G Thoroughfares – A concrete sidewalk, a minimum five feet (5’) in width, shall be located along all Type C, D, E, F, and G thoroughfares. The sidewalk shall be located within the street ROW unless pre-existing physical encroachments (e.g., utility infrastructure or trees) dictate otherwise. The outside edge of the sidewalk shall be located two feet (2’) inside the ROW line on Type C, D, and E thoroughfares. On Type F and G

thoroughfares, the outside edge of the sidewalk may be on the ROW line and a two-foot (2') sidewalk easement shall be provided adjacent to the ROW line.

6. See Section 3 of the Engineering Standards for sidewalk thickness requirements.

7. Sidewalk Easements – A minimum of two feet (2') of ROW or sidewalk easement shall be provided adjacent to the outside edge of the sidewalk. Any portion of sidewalk extending outside the ROW shall be contained within a sidewalk easement, the inside edge of which extends to the ROW line and the outside edge of which extends a minimum of two feet (2') beyond the outside edge of the sidewalk.

8. Parkways – The area between the curb and ROW line shall be graded at two percent (2%) above the top of street curb. If the area between the curb and the sidewalk is at least three feet (3') wide, it shall contain grass that is maintained by the adjacent property owner. If the area between the curb and sidewalk is less than three feet (3') wide, it shall be paved with concrete for a minimum length of fifteen feet (15'). If a parkway is adjacent to a non-residential or multi-family land use, the area between the curb and the sidewalk may be paved with concrete or concrete pavers in lieu of grass.

9. Meandering Sidewalks – Sidewalks along Type A, B, and C thoroughfares and residential collectors may meander for aesthetics and/or to avoid pre-existing physical encroachments. Sidewalk easements adjacent to the standard ROW line will be required to contain any portion of the meandering sidewalk that extends beyond the ROW. Sidewalk easements shall provide a minimum clearance of two feet (2') beyond the outside edge of the sidewalk. The inside edge of a meandering sidewalk shall never be less than five feet (5') from the back-of-curb. A tangent calculated at any point along the centerline of a meandering sidewalk shall not be less than thirty degrees (30°) from perpendicular to the street. These requirements are shown in Figure 2.25.

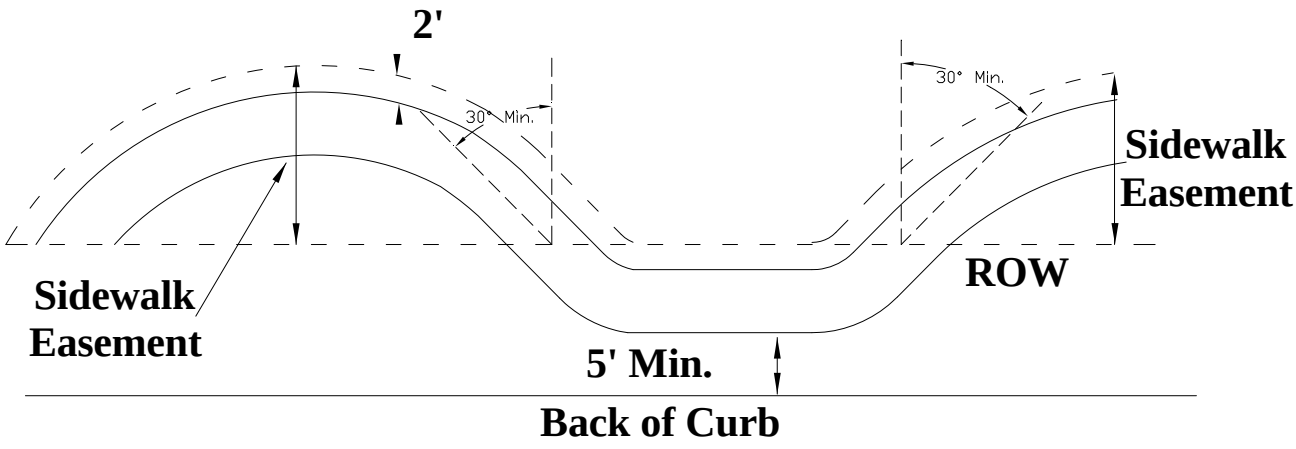

FIGURE 2.25: Meandering Sidewalk Detail

10. Sidewalks Adjacent to Screening Walls – In areas where a screening wall is provided along a thoroughfare, the outside edge of the sidewalk shall either remain a minimum of two feet (2') from the wall or the sidewalk shall be paved up to the wall.

11. Access Ramps – Barrier-free ADA access ramps shall be provided at all street intersection corners, at all crosswalks, and across any non-residential or multi-family driveway.

12. Sidewalks on Bridges

    a. All street bridges shall have a sidewalk constructed on each side of the bridge. The sidewalk shall have a minimum width of six feet (6') with a parapet wall that is separated from the travel lane by an eighteen inch (18") shoulder. See Figure 2.26.

    b. A standard pedestrian bridge rail protecting the sidewalk shall be provided on the outside edge of the bridge. See Figure 2.26.

    c. When an eight foot (8') sidewalk is required on the bridge as part of a hike and bike trail, the center lane may be reduced to eleven feet (11') and the shoulders may be reduced to twelve inches (12").

13. Sidewalks Under Bridges – When new bridges are built as a part of the construction of a roadway or the reconstruction of a roadway and a pedestrian crossing is needed beneath the bridge, a sidewalk shall be built as a part of the embankment design underneath the structure for future hike and bike trails. The Hike and Bike Master Plan will designate whether a sidewalk is built on one or both sides of the waterway and whether the sidewalk shall be ten feet (10') or twelve feet (12') wide.

14. Sidewalks on Culverts – All culvert crossings shall have a sidewalk, a minimum of six feet (6') wide, constructed on each side of the culvert. A standard pedestrian hand rail as shown in Figure 2.27 shall be provided on the outside edge of the culvert. A parapet wall may be required by the Director of Engineering Services.

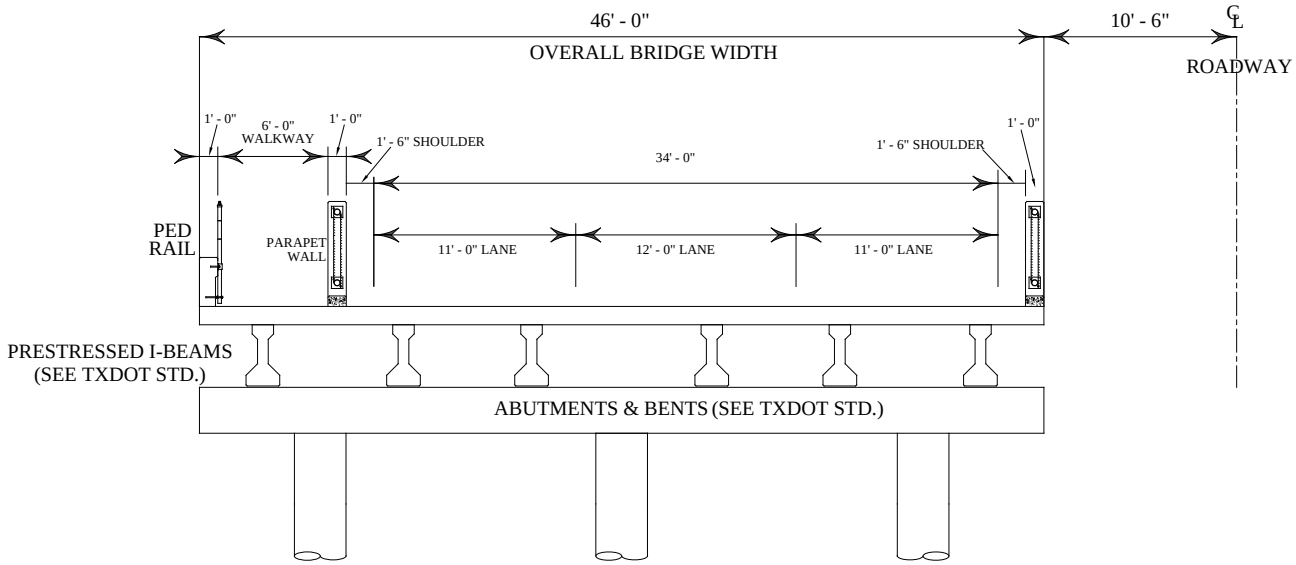

FIGURE 2.26: Typical Sidewalk on Bridge Section

Typical Thoroughfare

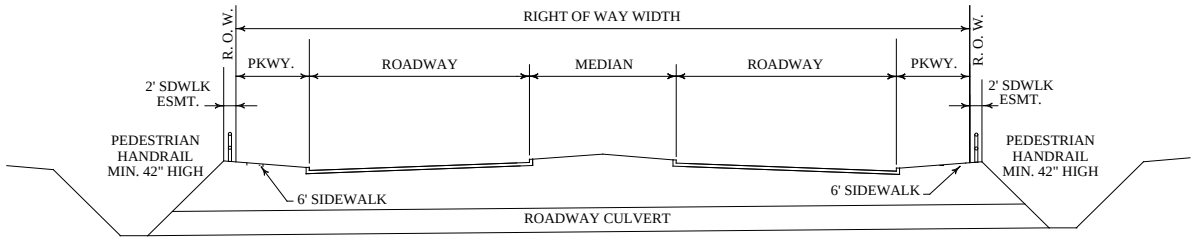

FIGURE 2.27: Typical Pedestrian Handrail Over Culvert

15. Sidewalks between Residential Lots

    a. Where deemed necessary by the Director of Engineering Services, a block with a continuous series of lots longer than one thousand two hundred feet (1,200’), measured along one or more sides, shall be bisected by a fifty foot (50’) wide pedestrian easement containing a sidewalk that is a minimum of five feet (5’) wide. Such a mid-block pedestrian connection will be necessary where it would be beneficial to create a short-cut to walk to a school, park, trail, or group of homes on the other side of the long block.

    b. Pedestrian easements and sidewalk connections shall be provided between cul-de-sacs and adjacent streets as required by the Subdivision Ordinance.

16. Sidewalk Escrow – When the delay of sidewalk construction is deemed appropriate by the City due to future right-of-way improvements, escrow funds in lieu of the construction of sidewalks may be approved by the Director of Engineering Services. Such funds shall be escrowed with the City prior to final acceptance of the development. The escrow amount shall be determined by the square footage of sidewalk to be constructed, as estimated by the developer, and approved by the Director of Engineering Services.

17. Sidewalk Reimbursement – If the City constructs the sidewalk along any street before the adjacent property develops, the owner of that property shall reimburse the City for its construction costs when the property is to be subdivided or developed. This amount shall be determined by multiplying the City's square foot cost of constructing the sidewalk by the square footage of sidewalk that is required along the property, subtracting out the square footage of sidewalk the developer will remove or replace while developing the site, and adding any cost associated with City-installed ADA access ramps, retaining walls, and protective railing. The reimbursement shall be paid before any plat may be filed for the property. If the property has already been platted or a plat is not required, the reimbursement shall be paid prior to final acceptance or Certificate of Occupancy, whichever occurs first.

C. Sidewalks within Non-Residential and Multi-family Developments – All sidewalks within non-residential and multi-family developments shall be a minimum of four feet (4') in width. At least one ADA accessible sidewalk connection shall be made between each building and the public sidewalk.

2.07 Public Right-of-Way Visibility Requirements

A. Adequate sight distance at the intersection of a thoroughfare and a proposed thoroughfare, driveway, or alley must be ensured. This sight distance is provided through the use of Corner Visibility Triangles and/or Sight Line Triangles. Corner Visibility Triangles are also known as ROW Corner Clips and Sight Line Triangles are also known as Visibility, Access and Maintenance Easements (VAMs). All intersection visibility requirements shall meet the guidelines for sight triangles in AASHTO's current *A Policy on Geometric Design of Highways and Streets*.

1. Corner Visibility Triangles shall be provided on all corners of an intersection between two thoroughfares or an intersection between an alley and a thoroughfare.

2. Sight Line Triangles shall be provided where a driveway, an alley, or a stop-controlled thoroughfare intersects an uncontrolled thoroughfare and on any signalized intersection approach where right turn on red operation is permitted.

3. No fence, wall, screen, sign, structure, foliage, hedge, tree, bush, shrub, berm, driveways, parking, drive aisles, or any other item, either man-made or natural shall be erected, planted, or maintained in a position that will obstruct or interfere with a driver's clear line of sight within a corner visibility triangle or a sight line triangle (i.e., a VAM).

4. The City has the right to prune or remove any vegetation within City right-of-way, including within the corner visibility triangle, and within sight line triangle easements (including VAMs), to abate a safety hazard and/or a nuisance.

B. Corner Visibility Triangles

1. The corner visibility triangle is defined at an intersection of two thoroughfares by extending the two ROW lines from their point of intersection to a distance as shown on Table 2.12. These two points are then connected with an imaginary line to form the corner visibility triangle as shown in Figure 2.28. This corner visibility triangle shall be dedicated as ROW.

TABLE 2.12: Corner Visibility Triangle Distances

Type of Thoroughfare On	Type of Thoroughfare At	Distance[1] (X)
A, B, C	A, B, C, D, or any residential street that potentially will be signalized	40’
A, B, C	E, F, G that will remain unsignalized	25’
D, E, F, G	D, E, F, G	10’
TxDOT Road, Frontage Road	Use the specifications for a Type A Thoroughfare	
Unimproved Road	D, E, F, G	30’

1. The corner visibility triangle shall have the same dimension on all corners of the intersection.

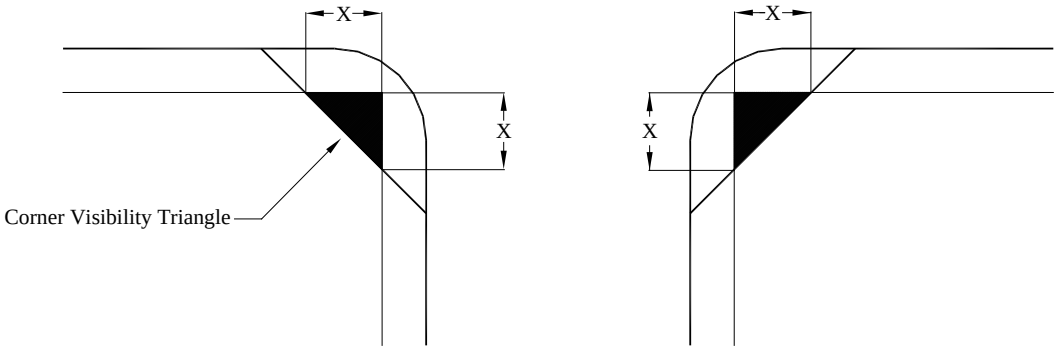

FIGURE 2.28: Corner Visibility Triangle for an Intersection

2. Vision at all intersections of thoroughfares shall be clear at elevations between thirty inches (30”) and nine feet (9’) above the average gutter elevation within the corner visibility triangle and meet AASHTO’s current minimum requirements.

3. Where alleys intersect residential Type E, F, and G thoroughfares, the corner visibility triangle is measured as fifteen feet (15’) along the residential street ROW and five feet (5’) along the alley ROW from the point of intersection. These two points are then connected with an imaginary line to form the corner visibility triangle as shown in Figure 2.29. The alley corner visibility triangle shall be dedicated as ROW.

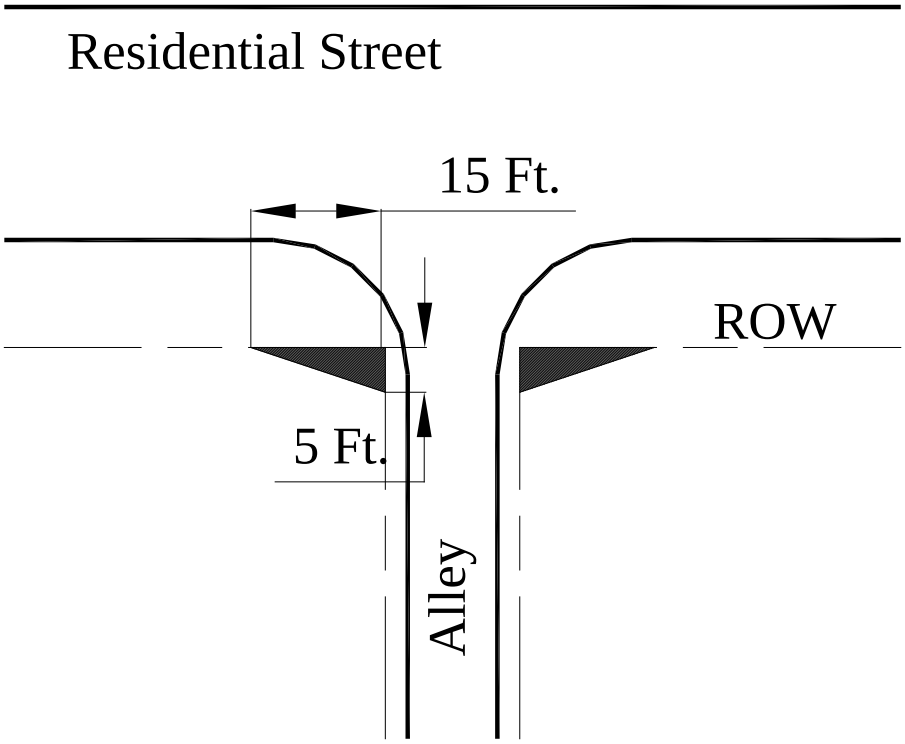

FIGURE 2.29: Corner Visibility Triangle for an Alley

C. Sight Line Triangles

1. The sight line triangle is formed by first extending a line along the center line of the proposed thoroughfare or driveway that begins at the tangent curb of the intersecting thoroughfare and extends to its endpoint fifteen feet (15') into the proposed thoroughfare or driveway. For the sight line triangle to the left, construct a second imaginary line that is parallel to and five feet (5') out from the intersecting thoroughfare's curb that begins at the centerline of the side street and continues to the left for a distance L (see Table 2.13) to its endpoint. To complete the sight line triangle, connect the endpoints of the first two lines as shown in Figures 2.30 and 2.31. In the case of the sight line triangle to the right, the second imaginary line is parallel and five feet (5') out from the nearest edge of the conflicting traffic flow (or adjacent median in the event of a divided thoroughfare). It begins at the centerline of the side street and continues to the right for a distance R (see Table 2.13) to its endpoint. See Figures 2.30 and 2.31.

2. Distance to driver's eye for driveways that intersect a street is fifteen feet (15') from the intersecting curb line as shown in Figures 2.30 and 2.31.

3. In the case where the thoroughfare contains existing horizontal curvature, the distances L and R must be measured along the horizontal curve.

4. Sight Line Triangles that extend outside of the ROW shall be identified and dedicated as Visibility, Access and Maintenance Easements (VAMs) on the plat using City-approved VAM language.

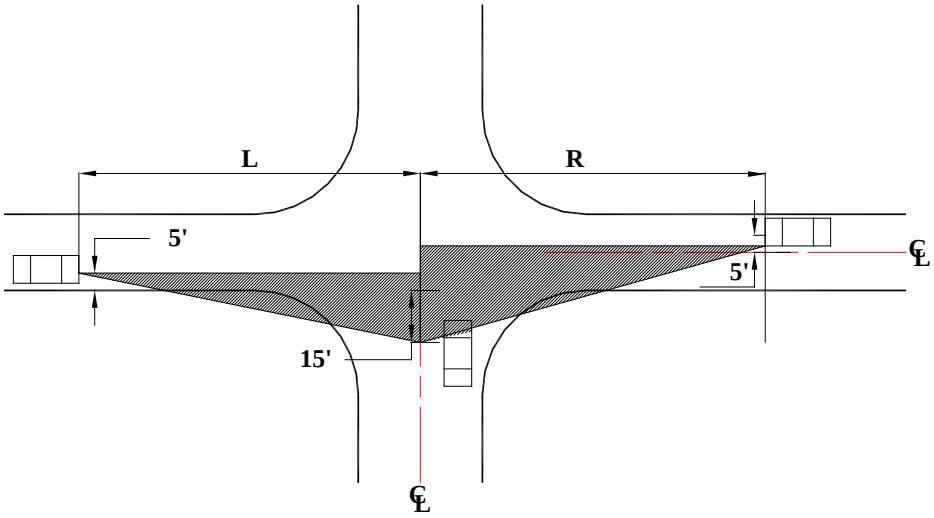

FIGURE 2.30: Sight Line Triangle for Undivided Thoroughfare

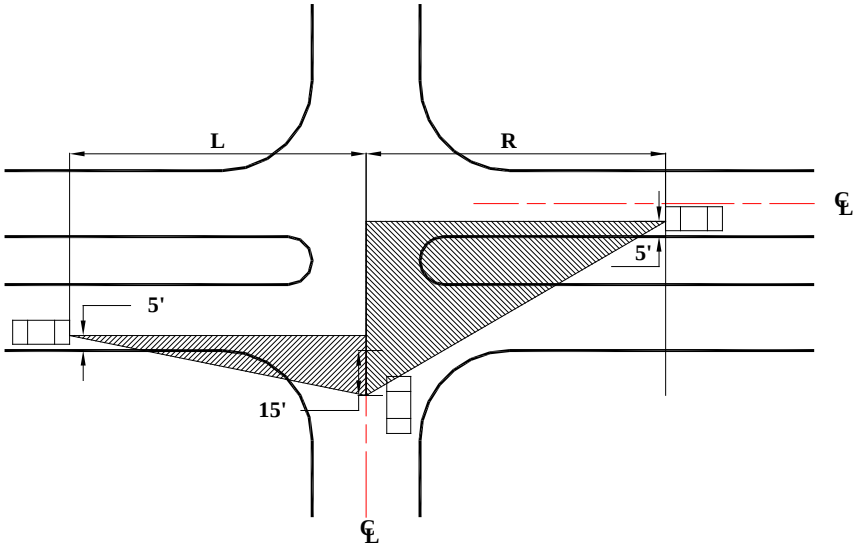

FIGURE 2.31: Sight Line Triangle for Divided Thoroughfare

TABLE 2.13: Sight Line Triangle Distances

Design Speed V (MPH)	Sight Distance by Lanes in Cross Section L and R (ft)		
	2	4[2]	6[2]
25	280[3]	N/A	N/A
30	335	N/A	N/A
35	390	N/A	N/A
40	445	N/A	N/A
45	500	530	565
50	555	590	625

(1) Source AASHTO's 2011 *A Policy on Geometric Design of Highways and Streets* – Chapter 9.
(2) Manual calculations of the procedures in AASHTO's 2011 *A Policy on Geometric Design of Highways and Street s*– Chapter 9
(3) 150 feet with approval by the Director of Engineering Services.

D. Traffic Control Devices – Any landscape requirements in the Engineering Standards, the Subdivision Ordinance, the Zoning Ordinance, or any other City ordinance shall not interfere with the placement, visibility or maintenance of traffic control devices under governmental authority and control.

2.08 Frontage Road Design

A. Frontage roads are typically a pair of one-way roadways found adjacent to existing or planned freeway or tollway facilities.

B. Frontage roads are considered Type A thoroughfares. Frontage roads for the Dallas North Tollway shall be designed to the Type A standards set forth in this document. Frontage roads along state highways shall follow TxDOT design guidelines.

C. Access to frontage roads shall also conform to the standards set forth for Type A thoroughfares. In addition, the following access restrictions apply to frontage road design:

1. Exit Ramp Restrictions:

   a. No driveway shall be located less than fifty feet (50') in advance of the concrete curb gore of an exit ramp, measured from the edge of the driveway.

   b. No driveway shall be located less than four hundred feet (400') beyond the concrete curb gore of an exit ramp, measured from the edge of the driveway.

2. Entrance Ramp Restrictions:

   a. No driveway shall be located less than two hundred feet (200') in advance of the concrete curb gore of an entrance ramp, measured from the edge of the driveway.

   b. No driveway shall be located less than fifty feet (50') beyond the concrete curb gore of an entrance ramp, measured from the edge of the driveway.

2.09 Traffic Signal Installation

A. Introduction – According to the *Texas Manual of Uniform Traffic Control Devices* (TMUTCD), traffic control signals should not be installed unless one or more of the signal warrants in the manual are met. The satisfaction of a warrant or warrants is not in itself justification for a signal. Information should be obtained by means of engineering studies and compared with the requirements set forth in the warrants. The engineering study should indicate the installation of a traffic signal will improve the overall safety and/or operation of the intersection. If these requirements are not met, a traffic signal should neither be put into operation nor continued in operation (if already installed).

B. Warrant Criteria

1. To justify the installation of a traffic signal, Part IV in the TMUTCD shall be followed. Part IV describes the warrants for a traffic signal installation and provides guidelines and requirements for the actual design and operation of a traffic signal.

2. Engineering studies must be conducted in order to assess whether a particular location satisfies the warrant criteria listed in the TMUTCD. These studies may include one or more of the following:

   a. Traffic volume counts

   b. Pedestrian volume counts

   c. Delay studies

   d. Speed studies

   e. Gap studies

   f. Diagram of physical conditions

   g. Accident studies

C. Traffic Signal Spacing – Signal spacing is an important factor in being able to provide progressive flow for a platoon of traffic. Traffic signal spacing shall be determined by the Director of Engineering Services.

D. Traffic Signal Design and Installation – The design and installation of traffic signals shall follow the City's Technical Specifications.

E. Cost of Traffic Signal Installation

1. Traffic signals where a private driveway or a residential street intersects with a Type A or B thoroughfare – The developer is responsible for the total cost of designing and constructing a traffic signal that would only be warranted based on the traffic generated by the development. The developer shall escrow funds for the cost of the traffic signal and the City shall construct the traffic signal at the time of development or when the development reaches a certain level of activity, as determined by the Director of Engineering Services. If a future traffic signal will equally serve a development on each side of the thoroughfare, each development shall be responsible for half the cost of the traffic signal.

2. Traffic signals at Type A-A, A-B, and B-B intersections – The developer on each corner of a Type A-A, A-B, or B-B intersection is responsible for a portion of the cost of designing and constructing a future traffic signal at the intersection and shall escrow such funds with the City at the time of development. Seventy-five percent (75%) of the total cost of designing and constructing the traffic signal shall be divided equally among each of the four corners of the intersection and then proportionally assessed to each lot within a fifteen (15) acre area at each corner, measured eight hundred eight feet (808') in each direction from the corner. In the case of a three-leg intersection, an imaginary fourth leg shall be assumed for the purposes of creating four corners. As each lot develops as a portion of each corner, the trips generated by that land use shall be calculated and compared to the trips that would be generated by the total fifteen (15) acre area, the ratio of which determines the proportion of the traffic signal escrow that shall be assessed to that lot. If a preliminary site plan has not been approved for the whole fifteen (15) acre area, the land uses of a typical shopping center shall be assumed. If there are less than fifteen (15) acres that can be developed on a corner, the trips generated by a developing lot will be compared to a hypothetical fifteen (15) acre shopping center.

2.10 Street Lighting

A. The following standards shall apply to all Type A and Type B Thoroughfares:

1. Street lighting shall be placed in the medians, with spacing not to exceed one hundred eighty feet (180') and no closer than one hundred fifty feet (150') depending on median breaks and intersections.

2. Unless a photometric analysis suggests the use of a different type of luminaire, street lighting shall use Full Cutoff, Type 3 Luminaires on thoroughfares with one hundred twenty feet (120') of ROW and Full Cutoff, Type 2 Luminaires on thoroughfares with one hundred feet (100') of ROW.

3. Die cast aluminum or extruded aluminum with segmented internal reflector, 250-watt Metal Halide single or double head with davit arm(s) traffic black (RAL9017-traffic black) in color, or the equivalent approved by the Director of Engineering Services shall be used.

4. Street lighting shall be installed prior to final acceptance of the construction of a thoroughfare. When partial thoroughfares are constructed, the Director of Engineering Services may allow the payment of a street light fee in lieu of installing the required lighting. Where property lines bisect thoroughfares, each Owner (Developer) is responsible for one-half the total cost of fully developed street lighting along that segment of the thoroughfare.

5. When development occurs along a Type A or Type B thoroughfare, the Owner (Developer) shall pay a street light fee to reimburse the City for the future or past installation of street lighting. The fee shall be paid prior to final acceptance of the development and the amount shall be determined by multiplying the then current fee rate by the amount of linear frontage the developing lot has along one or both sides of the thoroughfare.

6. Poles are to be round and tapered with a maximum height of thirty feet (30') in accordance with the City's Standard Details and specifications.

7. Type A ground boxes with concrete aprons are required in accordance with the City's Standard Details and specifications.

8. Street lighting foundations shall be thirty inches by ninety six inches (30” x 96”) in accordance with the City’s Standard Details and specifications.

9. Street lighting conduit shall be two inch (2”) Schedule 40 PVC.

10. Street lighting shall use #12 AWG wiring inside the poles.

11. Electrical service pedestals shall be 240V/480V and meet the local service provider’s specifications.

12. Conduit shall be installed as shown in Section 6.02, Landscape Requirements in the Median.

B. The following standards shall apply to all Type C commercial collectors:

1. Street lighting shall be placed in the parkway between the curb and the sidewalk, with spacing not to exceed one hundred eighty feet (180’) and no closer than one hundred fifty feet (150’).

2. Street lighting shall use Full Cutoff, Type 2 Luminaires.

3. Die cast aluminum or extruded aluminum with segmented internal reflector, 250-watt Metal Halide single head with davit arm traffic black (RAL-9017 traffic black) in color, or equivalent approved by the Director of Engineering Services shall be used.

4. Street lighting shall be installed prior to final acceptance of the construction of a commercial collector. When the delay of installing street lighting is deemed appropriate by the Director of Engineering Services, the Director may allow the payment of a street light fee in lieu of installing the required lighting. Where property lines bisect collectors, each owner (Developer) is responsible for one-half of the total cost of fully developed street lighting along that segment of the collector.

5. When development occurs along a Type C commercial collector, the Owner (Developer) shall pay a street light fee to reimburse the City for the future or past installation of street lighting. The fee shall be paid prior to final acceptance of the development and the amount shall be determined by multiplying the then current fee rate by the amount of linear frontage the developing lot has along one or both sides of the collector.

6. Poles are to be round tapered with a maximum height of thirty feet (30’) in accordance with the City’s Standard Details and specifications.

7. Type A ground boxes with concrete aprons are required in accordance with the City’s Standard Details and specifications.

8. Street lighting foundations shall be thirty inches by ninety six inches (30” x 96”) in accordance with the City’s Standard Details and specifications.

9. Street lighting conduit shall be two inch (2”) Schedule 40 PVC.

10. Street lighting shall use #12 AWG wiring inside the poles.

11. Electrical service pedestals shall be 240V/480V and meet the local service provider’s specifications.

C. The following standards shall apply to all Type D, E, F, and G Residential Streets:

1. Poles are to be round tapered, American style with Barrington base, black in color. Pole height shall be twelve feet (12') for Type D, E, F, and G local streets and fourteen feet (14') for residential collectors.

2. Lamp wattages shall be 100 watts High Pressure Sodium.

3. Luminaires shall be Acorn with refractive globes, metal cap and finial.

4. The Developer may install additional banding and/or medallions with prior approval from the Director of Engineering Services. The cost for maintenance and/or replacement of the banding and/or medallions shall be the responsibility of the developer or Homeowners' Association.

5. Street lights shall be installed without multiple luminaires.

6. Street lights shall typically be located at intersections and at mid-block locations if the block length is greater than six hundred feet (600'). Cul-de-sacs over two hundred twenty five feet (225') in length, measured from centerline of cross street to center point of cul-de-sac, shall have a street light installed at the street intersection and at the beginning of the bulb. Other locations may be required as deemed necessary by the Director of Engineering Services. Street lights shall not be closer than one hundred fifty feet (150') nor greater than six hundred feet (600') apart.

7. Subdivisions bounded by Type A or Type B thoroughfares shall have a common type of luminaire throughout. Street lighting shall be installed prior to acceptance by the Director of Engineering Services.

D. A lighting plan shall be required anytime street lighting is proposed, or modified. The lighting plan shall be submitted to the Director of Engineering Services for a construction permit. A certified engineer, architect, landscape architect, lighting engineer or designer shall prepare the plan. The plan shall also contain a certification by the property owner or agent and the preparer of the plan that the street lighting depicted on the plan complies with these requirements. The submission shall contain but shall not necessarily be limited to the following:

1. Plans indicating the location of the lighting, and the type of illuminating devices, fixtures, lamps, supports, reflectors, and other devices;

2. Description of the illuminating devices, fixtures, lamps, supports, reflectors, and other devices and the description may include, but is not limited to, catalog cuts by manufacturers and drawings (including sections where required) and height of the luminaires;

3. Photometric plan and data sheets, such as that furnished by manufacturers, or similar to that furnished by manufacturers or the lighting designer, showing the angle of cut off or light emissions; and

4. Water and sewer locations along with any other existing utilities lightly shaded on plans showing any possible location conflicts with proposed lighting.

E. The following are exempt from these requirements:

1. "Cobra head" type lighting fixtures having dished or "drop" lenses or refractors which house other than incandescent light sources in undeveloped areas.

2. Temporary lighting approved in writing by the Director of Engineering Services.

3. Where existing or phased subdivisions are currently under construction, the continued use of previously approved street lighting will be permitted. When a new phase of a subdivision is divided by a residential collector, the street lighting standards contained in these requirements shall be required.

4. City Council may vary from these requirements as part of the approval of public street and sidewalk projects in overlay districts and Planned Developments.

5. Lighting luminaires in existence on the effective date of these requirements shall be exempt from these standards and shall be considered legally non-conforming. Such fixtures may be repaired, maintained and/or replaced. If an identical replacement of non-conforming luminaires is not available, the new luminaires shall comply with these requirements.

2.11 Street Name Signs

A. Street name signs shall be installed at all intersections of public streets, private streets, and public ways in accordance with the City's Standard Details, Technical Specifications and requirements.

B. Street name blades shall be nine inch (9") tall extruded aluminum.

C. The street name shall be left justified, with block numbers located in the upper right-hand corner. Abbreviated street designations shall be located in the lower right-hand corner and right-justified.

D. The lettering of the street name shall be Clear View 2W, six inches (6") tall and upper/lower case. Letters of abbreviated street designations shall be three inches (3") tall and all uppercase (i.e., LN, PKWY, DR, CT, etc.). Block numbers shall be 3" tall.

E. A street name shall be limited to sixteen (16) characters, not including the street designation. A street name shall either consist of one word no longer than sixteen (16) letters or two words separated by one space where the two words have no more than fifteen (15) letters combined.

F. Sign sheeting shall be diamond grade intensity. The background shall be green and the legend shall be white.

G. For a street with only one cul-de-sac end, a standard W 14-2a shall be mounted over the street name blade. In the case of a street with two cul-de-sac ends, two standard W 14-2a signs shall be mounted over the street name blade in the appropriate directions.

H. Owners, developers, and/or contractors should contact Development Services at (972) 292-5300 to obtain block numbers. Block numbers are required on all street name blades, even if no homes or buildings front onto the street.

2.12 Traffic Impact Analysis and Mitigation

A. Purpose – The purpose of a Traffic Impact Analysis (TIA) is to assess the effects of specific development activity on the existing and planned thoroughfare system. Development activity

may include but is not limited to rezoning, preliminary site plans, site plans, preliminary plats, driveway permits, certificates of occupancy, and Thoroughfare Plan amendments.

B. Pre-submission Meeting – Prior to the commencement of a TIA, an initial or pre-submission meeting with City staff is required to establish a base of communication between the City and the applicant. This meeting will define the requirements and scope relative to conducting a TIA and ensure that any questions by the applicant are addressed.

C. Applicability of TIA Requirements

1. Zoning – These TIA requirements shall apply to all zoning requests for land uses which will generate 2,500 or more vehicle trips per day or contain a density of 0.75 Floor Area Ratio (FAR) or greater. Applicable requests include zoning requests and Thoroughfare Plan amendments, if no previous traffic assessment was performed. Special circumstances, including but not limited to development with no case history, which do not meet the daily trip generation threshold, may also require a TIA. Such circumstances, as determined by the Director of Engineering Services may include, but are not limited to, impacts to residential neighborhoods from non-residential development, inadequate site accessibility, the implementation of the surrounding Thoroughfare Plan is not anticipated during the estimated time period of the proposed development, the proposed land use differs significantly from that contemplated in the Comprehensive Plan, or the internal street or access is not anticipated to accommodate the expected traffic generation.

2. Development – These TIA requirements shall apply to all development requests for land uses, except single-family residential development, which will generate over 100 total trips during the AM or PM peak hour. Applicable development requests include concept plans, preliminary site plans, site plans and preliminary plats. Special cases, in which site generated peak hour trip activity is different from that of the adjacent street (weekdays 7:00-9:00 a.m. and 4:00-6:00 p.m.), may require an additional separate analysis as determined by the Director of Engineering Services. Such circumstances may include, but are not limited to, commercial/retail, entertainment or institutional activity. The Director of Engineering Services may waive the TIA for a development request if a TIA was performed previously with the Zoning request and conditions listed in the report are still current.

3. Single-Family Residential Exception – A TIA for single-family residential development will not be required if the development contains fewer than six dwelling units unless special circumstances exist, as determined by the Director of Engineering Services. These special circumstances may include, but are not limited to, impacts to other residential development from cut-through traffic, inadequate site accessibility, the implementation of the surrounding Thoroughfare Plan is not anticipated during the estimated time period of the proposed development, the internal street or access system is not anticipated to accommodate the expected traffic generation, or the development is outside the urban core of the community

4. Daycares and Schools – All development requests and/or specific use permit requests for a daycare, Montessori school, private school, charter school, or public school shall include, at a minimum, a traffic circulation study. This study shall include the estimated maximum peak hour trip generation of the facility, the planned circulation of inbound and outbound traffic during drop-off and pick-up operations, and the estimated length of the queue of cars waiting to pick up students. The design of the site and the circulation plan shall ensure that school traffic does back up onto any public street. The traffic circulation study shall include a statement that the owner and/or operator of the daycare or school agrees to operate the facility in accordance with the approved circulation plan. The circulation plan must be approved by

the Director of Engineering Services before the development request or the specific use permit can be approved.

5. Determination of Applicability – The need for a TIA shall be determined by the Director of Engineering Services based upon the results and recommendation from a pre-submission meeting. It shall be the responsibility of the applicant to demonstrate that a TIA should not be required. If a TIA is required, the level of effort for a TIA submission shall be determined based on the criteria set forth in Table 2.14. Depending upon the specific site characteristics of the proposed development, one or more of the following elements may also be required as part of the TIA: an accident analysis, sight distance survey, traffic simulation, traffic signal warrant analysis, queuing analysis, turn lane analysis, and/or traffic circulation plan.

TABLE 2.14: Criteria for Determining TIA Study Requirements

Analysis Category	Site Trips Generated at Full Build-Out	TIA Analysis Periods(1)	Minimum Study Area(3)
I	>50 peak hour driveway trips; or 100-500 total peak hour trips	1. Existing year 2. Opening year(2) 3. Five years after opening	1. All site access drives 2. All signalized intersections and/or major unsignalized intersections within 0.5 mile to 1 mile of site boundary
II	>500 total peak hour trips	1. Existing year 2. Opening year of each phase 3. Five years after initial opening 4. Ten years after final opening with full build-out	1. All site access drives 2. All signalized intersections and/or major unsignalized intersections within 1.5 miles of site boundary

1. Analysis periods shall include build and no-build scenarios. Assume full occupancy when each phase opens.
2. Assume full build-out.
3. For certain projects, the City may require an enlarged study area. Land uses within the study area should include recently approved or pending development adjacent to the site.

D. Requirements for TIA Updates – A TIA shall be updated when time or circumstances of the original study fall within the parameters presented in Table 2.15. The applicant is responsible for preparation and submittal of appropriate documentation in order for City staff to process the zoning or development application. A TIA for site development requests must be updated if two years have passed since the original submittal, or if existing or assumed conditions have changed within the defined study area. The Director of Engineering Services shall make the final determination as to the extent of a TIA update.

TABLE 2.15: Criteria for Determining TIA Update Requirements

Original TIA Report was based on:	Changes to the Originally Proposed Development:	
	Access Changed[1] or Trip Generation Increased by more than 10%	Access Not Changed and Trip Generation Increased by less than 10%
Zoning; or Preliminary Site Plan or Site Plan that is less than 2 years old	Letter Amendment Required: Identify and report only analysis conditions that have changed	Letter Documenting Change (No analysis is required)
Preliminary Site Plan or Site Plan that is more than 2 years old	Prepare New Study. Must meet all current TIA requirements	Prepare New Study. Must meet all current TIA requirements.

1. Changed access includes proposed new access or refinement of general access locations not specifically addressed in original proposed development.

E. Responsibility of TIA Preparation and Review

1. A TIA shall be prepared in accordance with all of the guidelines in this section and submitted in accordance with the Development Review Schedule set by the City. The responsibility for TIA preparation shall rest with the applicant and must be performed by a Professional Engineer (P.E.) licensed in the State of Texas with experience in traffic and transportation engineering. The final TIA report must be signed and sealed by the P.E. responsible for the analysis to be considered for review by the City. Application and review fees are due at the time of each submittal. City staff shall serve primarily in a review and advisory capacity and will only provide data to the applicant when available.

2. It shall be the responsibility of the applicant to submit four (4) draft TIA reports and executive summaries with the zoning and/or development request submission. The proper number of reports, the timing for submission, and the review of these reports shall be based on standard City development review procedures. Incomplete TIAs or failure to submit a TIA with the submission shall delay consideration of zoning and development requests. Should it be determined during the review of any zoning and/or development plans that a TIA is required, consideration shall be deferred until the applicant submits a completed TIA and the City has reviewed the assessment.

3. The City shall review the TIA and provide comments to the applicant. It shall be the responsibility of the applicant to submit four (4) finalized TIA reports and executive summaries once all review comments have been addressed.

F. TIA Standards

1. Design Level of Service – The minimum acceptable level of service (LOS) within the City shall be defined as LOS "D" in the peak hour for all critical movements and links. All development impacts on both thoroughfare and intersection operations must be measured against this standard.

2. Trip Generation Resources – The City's standard for trip generation rates for various land use categories shall be those found in the latest edition of *Trip Generation* published by the

Institute of Transportation Engineers (ITE) or other published or recognized sources applicable to the region. Alternate trip generation rates may be accepted on a case-by-case basis if the applicant can provide current supporting data substantiating that their development significantly differs from the ITE rates. The Director of Engineering Services must approve alternative trip generation rates in writing in advance of the TIA submission.

3. Trip Reductions – Trip reductions for passer-by trips and mixed-use developments will be permitted, subject to analytical support provided by the applicant and approval by the Director of Engineering Services on a case-by-case basis. Assumptions relative to automobile occupancy, transit mode share, or percentage of daily traffic to occur in the peak hour must be documented and will be considered subject to analytical support provided by the applicant.

4. Study Horizon Years – The TIA must evaluate the impact of the proposed development on both existing traffic conditions and future traffic conditions for the horizon year(s) as specified in Table 2.14. However, applications for densities of 0.75 Floor Area Ratio (FAR) or greater within the Dallas North Tollway, SH 121, US 380 or Preston Road corridors (throughout the City Limits) shall require that the horizon year land use assumptions be updated to reflect full development based on all proposed zoning. These applications should also assume full development of the Master Thoroughfare Plan or pending amendments.

G. TIA Methodology

1. Site Location/Study Area – A brief description of the size, general features, and location of the site, including a map of the site in relation to the study area and surrounding vicinity.

2. Existing Zoning – A description of the existing zoning for the site and adjacent property, including land area by zoning classification and density by FAR, square footage, number of hotel rooms, and dwelling units (as appropriate);

3. Existing Development – A description of any existing development on the site and adjacent to the site and how it would be affected by the development proposal;

4. Proposed Zoning / Site Development – A description of the proposed zoning/development for the site, including land area by zoning classification and density by FAR, square footage, number of hotel rooms, and dwelling units (as appropriate); identify other adjacent land uses that have similar peaking characteristics as the proposed land use; identify recently approved or pending land uses within the area;

5. Thoroughfare System – A description and map of existing planned or proposed thoroughfares and traffic signals for horizon year(s) within the study area;

6. Existing Traffic Volumes – Recent traffic counts for existing thoroughfares and major intersections within the study area;

7. Projected Traffic Volumes – Background traffic projections for the planned thoroughfare system within the study area for the horizon year(s);

8. Density of Development – A table displaying the amount of development assumed for existing zoning and/or the proposed development (using gross floor area, dwelling units, occupied beds, etc., as required by the trip generation methodology);

9. Existing Site Trip Generation – A table displaying trip generation rates and total trips generated by land use category for the AM and PM peak hours and on a daily basis, assuming full development and occupancy based on existing zoning (if applicable), and including all appropriate trip reductions (as approved by the Director of Engineering Services);

10. Proposed Site Trip Generation – A table displaying trip generation rates and total trips generated by land use category for the AM and PM peak hours and on a daily basis, assuming full development and occupancy for the proposed development, and including all appropriate trip reductions (as approved by the Director of Engineering Services);

11. Net Change in Trip Generation (for rezoning cases) – Proposed trip generation minus existing trip generation (if applicable); the net increase in trips to be added to base volumes for the design year;

12. Trip Distribution and Traffic Assignment – Tables and figures of trips generated by the proposed development (or net change in trips, if applicable) added to the existing and projected volumes, as appropriate, with distribution and assignment assumptions, unless computer modeling has been performed;

13. Level of Service Evaluations – Capacity analyses for weekday AM and PM peak hours of the roadway and peak hour of the site, if different from the roadway, for both existing conditions and horizon year projections for intersections, thoroughfare links, median openings and turn lanes associated with the site, as applicable;

14. Traffic Signal Evaluations – The need for new traffic signals based on warrants and their impact on the performance of the transportation system;

15. Evaluation of Proposed/Necessary Mitigation – Capacity analyses for weekday AM and PM peak hours of the roadway and peak hour of the site, if different from the roadway, for intersections, thoroughfare links, median openings and turn lanes associated with the site under proposed/necessary traffic mitigation measures;

16. Conclusions – Identification of all thoroughfares, driveways, intersections, and individual movements that exceed LOS D or degrade by one or more LOS, the percentage of roadway volume change produced by the proposed development, and any operational problems likely to occur;

17. Recommendations – Proposed impact mitigation measures consistent with Subsection I below; and

18. Other information required for proper review – As requested by the Director of Engineering Services.

H. TIA Report Format

1. The TIA report must be prepared on 8½” x 11” sheets of paper. However, it may contain figures on larger sheets, provided they are folded to this size. All text and map products shall be computer-based and provided in both published format and computer file format (PDF). In addition, all electronic files used as part of the traffic analysis (i.e., Synchro, HCS, Passer II/III, CORSIM, VISSIM, etc.) shall be provided.

2. The sections of the TIA report should be categorized according to the outline shown below:

Executive Summary

I. Introduction
   A. Purpose
   B. Methodology
II. Existing And Proposed Land Use
   A. Site Location/Study Area
   B. Existing Zoning
   C. Existing Development
   D. Proposed Zoning (if applicable)
III. Existing And Proposed Transportation System
   A. Thoroughfare System
   B. Existing Traffic Volumes
   C. Projected Traffic Volumes
IV. Site Traffic Characteristics
   A. Existing Site Trip Generation (if applicable)
   B. Proposed Site Trip Generation
   C. Net Change in Trip Generation (if applicable)
   D. Trip Distribution and Traffic Assignment
V. Traffic Analysis
   A. Level of Service Evaluations
   B. Traffic Signal Evaluations
VI. Mitigation
VII. Conclusions
VIII. Recommendations

Appendices

I. Traffic Impact Mitigation

1. Mitigation of traffic impacts shall be required if the proposed development would cause a facility or traffic movement to exceed LOS D, or where it already exceeds LOS D and the development would contribute five percent (5%) or more of the total traffic during any projected horizon year. If mitigation is required, the applicant must only mitigate the impact of the proposed development, and would not be responsible for alleviating any deficiencies in the thoroughfare system that may occur without the proposed development.

2. Acceptable mitigation measures shall include:

   a. Staging of development in order to relate site development to the construction of the required thoroughfare system;

   b. Staging of development so that the site contributes less than five percent (5%) of the total traffic to the affected facility or traffic movement during the projected horizon year;

   c. Off-site improvements, including the provision of right-of-way and/or the participation in funding for needed thoroughfare and intersection improvement projects (including, but not limited to, through lanes, turn lanes or traffic signals); and

   d. On-site improvements, including access controls and site circulation adjustments.

3. Mitigation is not required if it can be shown that the traffic impacts of the project are fully mitigated ten (10) years after the final opening with any improvements that are already programmed to be implemented within five (5) years of the initial opening.

J. Administration of the TIA – Based on the results of the TIA and actions recommended by the Director of Engineering Services, the Planning & Zoning Commission and/or the City Council, as appropriate, shall take one or more of the following actions:

1. Approve the zoning or development request, if the project has been determined to have no significant impact or where the impacts can be adequately mitigated;

2. Approve the development request, subject to a phasing plan;

3. Recommend study of the City Thoroughfare Plan to determine amendments required to increase capacity;

4. Recommend amendment of the Capital Improvement Program (CIP) to expedite construction of needed improvements; or

5. Deny the zoning or development request, where the impacts cannot be adequately mitigated.

K. Cost of TIA Review by City – The cost for review of TIA submittals shall be based on the parameters set forth in the City's Development Fee Schedule and paid in full at time of submission.

SECTION 3 – PAVEMENT AND SUBGRADE DESIGN REQUIREMENTS

Section 3 – Pavement and Subgrade Design Requirements

3.01 General

A. The following specifies minimum standards required for the design of pavement and subgrade for roadways within the City. These minimum standards are not intended to replace the professional judgment of the Engineer for any specific pavement project. The standards may need to be expanded or modified on a case by case basis as determined necessary and appropriate by the Engineer, and as approved by the Director of Engineering Services.

B. All roadway, alley, and fire lane pavements shall have a subgrade investigation and pavement design.

C. Pavement and subgrade designs shall be submitted to the City for review in accordance with these requirements. However, any such review shall be conducted as a means to verify if the design has been performed in general conformance to the City's requirements, and shall not be considered a detailed technical review of the design for adequacy, accuracy, or completeness. The Engineer performing the pavement design shall remain responsible for the technical adequacy, accuracy, and completeness of the pavement and subgrade design and shall not be relieved of any responsibility for such as a result of the City's review.

D. When performing the pavement and subgrade designs and providing submittals of such to the City, the Engineer shall specifically document in writing any intended deviations from the City's minimum standards, and shall provide adequate justifications as deemed necessary by the Director of Engineering Services.

E. Refer to Engineering Standards Appendices (Standard Details, Technical Specifications) for additional specific requirements.

3.02 Subgrade and Pavement Design Report

A. Results of the field and laboratory investigations, engineering analyses and recommendations shall be presented in a report.

B. The report shall be signed and sealed by a Licensed Professional Engineer in the State of Texas trained and qualified to provide geotechnical engineering analysis, and design recommendations.

C. The report shall contain a specific list of pavement and subgrade thickness, moisture conditioning of subgrade soils (if applicable), and stabilization requirements including lime source, type, and concentration (by dry weight) which can be easily incorporated to plans and specifications.

D. All calculations and laboratory tests shall be included in the report along with boring location plan and geology maps.

E. The information and recommendations contained in the report must be accepted by the Director of Engineering Services in writing.

3.03 Subgrade Design Requirements

A. Subgrade investigation may be conducted according to either of two methods: the Swell Test Alternative or the calculated Potential Vertical Rise (PVR) -TxDOT Tex-124-E Alternative.

B. The subgrade investigation shall consist at a minimum of a field investigation and a laboratory investigation.

C. Field Investigation elements include:

1. Swell Test Alternative: Borings shall be drilled on center of roadway at 250’ spacing (or less), alternating between each roadway direction or on a 200’ grid throughout a subdivision to a depth of at least 10’ below finished subgrade.

2. PVR-TxDOT Tex-124-E Alternative: Borings shall be drilled on center of roadway at 250’ spacing (or less), alternating between each roadway direction or on a 200' grid throughout a subdivision to a depth of at least 20’ below finished subgrade.

3. Borings shall be sampled at 3’ intervals or less to a depth of 10’ and at 5’ intervals or less thereafter.

4. Bulk samples of each soil type encountered in the upper 5’ shall be taken.

5. Logs shall be developed to provide a lithographic log of the soil types encountered in each boring, descriptions of each layer and groundwater conditions.

D. Laboratory Investigation elements include:

1. Swell characteristics and movement potential shall be determined using either the Swell Test Alternative or calculated Potential Vertical Rise for a 20’ depth of moisture penetration. Assumptions involved in calculating the PVR shall be documented and submitted to the City upon request.

   Swell Test Alternative: Test for swell potential using ASTM D 4546 at 200 psf stress at least two samples per boring at varying depths from 0’ to 10’ to determine with reasonable certainty the average swell potential of the subgrade.

   PVR-TxDOT Tex-124-E Alternative: Test for swell potential using swell tests (ASTM D4546) and/or soil suction tests (ASTM D5298) necessary to calculate PVR for a 20’ moisture penetration.

2. Moisture Content Tests (ASTM D 2216) shall be performed. Due to the variability in moisture contents, the Geotechnical Engineer shall assess the condition of the samples and the season. When in the Geotechnical Engineer's opinion the samples are wetter than should normally be expected, the samples may be air dried such that the samples represent the drier portion of the year. Average all swell test results to determine the mean maximum swell percentage and the standard deviation. For samples taken during the months of June through September use the mean swell percentage. For samples taken during all other time periods use the mean plus one standard deviation to determine the design swell percentage.

3. Soil types in each boring shall be subjected to classification tests; Atterberg limits (ASTM D 4318) and Percent Passing the No. 200 sieve (ASTM D 1140) and moisture/density. Where logs show uniform conditions, the number of tests can be reduced by visual classification, as long as there is at least one set of classification tests per each two borings.

4. Based upon the results of classification tests, group the samples and identify the subgrade soil types in the upper 5’ which impact the pavement design

5. Test for sulfates in the upper 3' of the subgrade in each boring using EPA 9038 or EPA 375.4 with 10:1 dilution ratio. Provide sufficient testing to determine with reasonable certainty the levels of sulfate present.

6. Provide engineering recommendation regarding acceptable sulfate levels for each soil type at the required lime stabilization content. See 3.03.F below

7. Perform a lime stabilization series for each soil type expected to be in the upper 12" of the subgrade. The Eades-Grimm method of pH testing shall be used to obtain a beginning point. Additional testing shall be performed for each soil type to determine lime content. Minimum Design Criteria are:

   pH = 12.4 after mellowing (ASTM D 2976)

   Swell potential <1.0 percent under 200 psf stress test (ASTM D 4546)

   The minimum lime content shall be the percentage, by weight, of hydrated lime required to meet the City's minimum requirements plus 1.0%.

   For light brown Eagle Ford formation clays, the minimum lime percentage shall be 7.0 percent hydrated lime (plus 1% for field variations for a total of 8%). For dark brown Eagle Ford formation clays, the minimum lime percentage shall be 10.5 percent hydrated lime (plus 1% for field variations for a total of 11.5%).

E. Weathered Eagle Ford formation shale material encountered within 8' below finished subgrade shall be excavated to a depth of at least the depth of required moisture treatment and replaced with on-site light brown or dark brown clays or other approved material.

F. Light brown Eagle Ford formation clays having over 5,000 ppm (0.5%) sulfate, and dark brown Eagle Ford formation clays having over 25,000 ppm (2.5%) sulfate shall be stabilized using double application method. (See Technical Specifications for description of lime application methods.)

G. Weathered Eagle Ford formation shale is not suitable for stabilization without appropriate detailed engineering and laboratory design and acceptance by the City. Weathered Eagle Ford formation shale having over 15,000 ppm (1.5 %) sulfate level shall be lime stabilized using double application method.

H. The results of the field and laboratory investigation shall be used to provide a subgrade design typically consisting of moisture treated subgrade and lime stabilized subgrade.

I. Alternative subgrade treatment and stabilization with comparable performance may be proposed if recommended by the Geotechnical Engineer and if approved by the Director of Engineering Services in writing, .

J. The following engineering requirements will apply to the moisture treated subgrade:

   1. <u>Swell Testing Alternative:</u> Use **Figure 3.1** to determine the minimum depth of moisture treatment based on average swell potential percentage to 10' (mean plus one standard deviation) and anticipated speed limit.

2. PVR-TxDOT Tex-124-E Alternative: The PVR shall be calculated based upon 20' moisture penetration and shall provide moisture treatment depth to limit the PVR to 4.5". Submit all calculations and assumptions involved in calculating the PVR and the recommended depth of moisture treatment to the City for review upon request.

3. Moisture treatment to a minimum of 3 percentage points above optimum moisture content at a minimum of 95 percent standard Proctor (ASTM D 698) shall be required for at least 2' of the subgrade. Thicker zones of moisture treatment may be required depending upon the average swell potential. The thickness shall be determined in accordance with **Figure 3.1** or as determined by calculations.

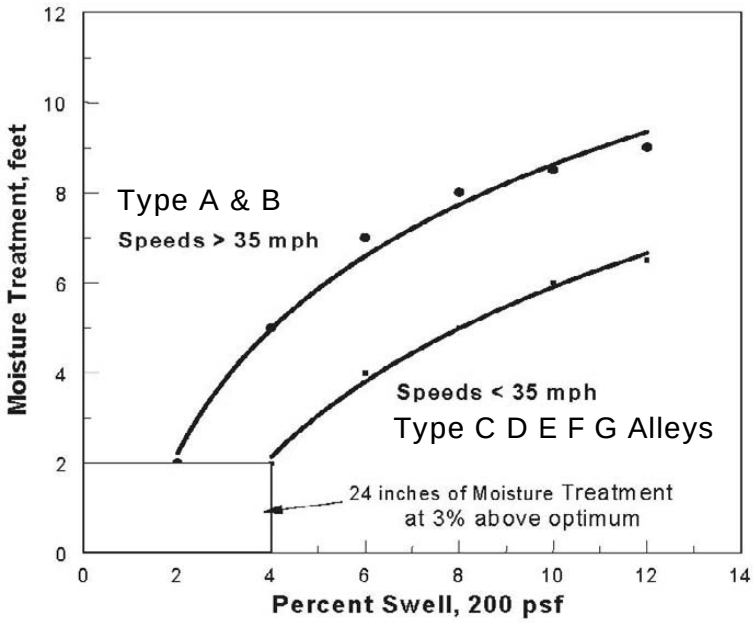

FIGURE 3.1: Recommended Depth of Moisture

K. The upper portion of the subgrade shall be lime stabilized in accordance with the laboratory determined lime percentage. A minimum subgrade thickness of 8" for residential streets and 12" for arterial streets shall be lime stabilized.

L. Moisture treatment and lime stabilization shall extend at least 4' beyond the edge of pavement. A moisture barrier consisting of at least 10 mil poly sheeting shall be placed horizontally on the subgrade beyond the pavement edge and extend at least 6' on either side of the pavement neat line after final compaction. The barrier shall be covered with at least 8" of lightly compacted soil.

3.04 Pavement Design Requirements

A. The roadway pavement thickness shall be based on subgrade investigation and Pavement Design Catalog.

B. Pavement Design Catalog is provided for each of the two main soil formations in Frisco: the Eagle Ford and the Austin Chalk. Adequate testing is required to determine which soil formation the project site lies within.

C. The Pavement Design Catalog is based on the data contained in Table 3.1. Any alternate designs shall be based on the same data.

D. All concrete for paving shall be Class C unless otherwise approved by the Director of Engineering Services.

E. All concrete which comes into contact with soils containing more than 0.1% (1,000 ppm) sulfate shall be designed to resist sulfate attack.

F. All asphalt shall be Type C.

G. Reinforcement shall be no less than #4 bars on 18" spacing.

H. Within the Pavement Design Catalog, the following applies :

1. Each option correlates to a specified range of swell potential.

2. Layer thickness is shown in inches and is not to scale.

3. Thoroughfare classes correspond to a specific range of average daily traffic (ADT).

4. For simplicity, Options 2.1-2.6 only show Type A & B Thoroughfares since Types C-G Thoroughfares will not incorporate a nonwoven geotextile interlayer and CTB. For Types C-G, use Options 1.1-1.6

Eagle Ford Shale Formation

Option	Layer	Thoroughfare Class: Type A	Type B	Type C	Type D,E,F, G Alley, Fire Lane
1.1	Concrete Lime Stabilized Subgrade Moisture Conditioned Subgrade	9 12 48	8 12 48	7 12 12	6 8 16
		2% ≤ Avg. Swell < 4%			
2.1	Concrete Nonwoven Geotextile Cement-Treated Base Lime Stabilized Subgrade Moisture Conditioned Subgrade	9 4 12 48	8 4 12 48		
		2% ≤ Avg. Swell < 4%			
1.2	Concrete Lime Stabilized Subgrade Moisture Conditioned Subgrade	9 12 72	8 12 72	7 12 40	6 8 40
		4% ≤ Avg. Swell < 6%			
2.2	Concrete Nonwoven Geotextile Cement-Treated Base Lime Stabilized Subgrade Moisture Conditioned Subgrade	9 4 12 72	8 4 12 72		
		4% ≤ Avg. Swell < 6%			
1.3	Concrete Lime Stabilized Subgrade Moisture Conditioned Subgrade	9 12 84	8 12 84	7 12 52	6 8 52
		6% ≤ Avg. Swell < 8%			
2.3	Concrete Nonwoven Geotextile Cement-Treated Base Lime Stabilized Subgrade Moisture Conditioned Subgrade	9 4 12 84	8 4 12 84		
		6% ≤ Avg. Swell < 8%			

Eagle Ford Shale Formation (continued)

1.4	Concrete Lime Stabilized Subgrade Moisture Conditioned Subgrade	9 12 90	8 12 90	7 12 64	6 8 64
		8% ≤ Avg. Swell < 10%			
2.4	Concrete Nonwoven Geotextile Cement-Treated Base Lime Stabilized Subgrade Moisture Conditioned Subgrade	9 4 12 90	8 4 12 90		
		8% ≤ Avg. Swell < 10%			
1.5	Concrete Lime Stabilized Subgrade Moisture Conditioned Subgrade	9 12 96	8 12 96	7 12 70	6 8 70
		Swell ≥ 10%			
2.5	Concrete Nonwoven Geotextile Cement-Treated Base Lime Stabilized Subgrade Moisture Conditioned Subgrade	9 4 12 96	8 4 12 96		
		Swell ≥ 10%			

Austin Chalk Formation

Option	Layers	Thoroughfare Class			
		Type A	Type B	Type C	Type D,E,F, G Alley, Fire Lane
1.6	Concrete Lime Stabilized Subgrade Compacted Subgrade	9 6	8 6	7 6	6 6
		0% ≤ Avg. Swell < 2%			
2.6	Concrete Nonwoven Geotextile Cement-Treated Base Lime Stabilized Compacted Subgrade	9 4 6	8 4 6		
		0% ≤ Avg. Swell < 2%			

Table 3.1 – Pavement Design Inputs

Input	Thoroughfare Classification			
	Type A	**Type B**	**Type C**	**Types D-G, Alley, Fire Lane**
Design Period	20 years	20 years	20 years	20 years
Initial Serviceability	4.5	4.5	4.5	4.5
Terminal Serviceability	2.5	2.3	2.3	2.0
Concrete MOR @ 28 days	620 psi	620 psi	620 psi	620 psi
Concrete E @ 28 days	5,000,000 psi	5,000,000 psi	5,000,000 psi	5,000,000 psi
Modulus of Subgrade Reaction (Eagle Ford Shale Formation)	300 psi/in	300 psi/in	300 psi/in	270 psi/in
Modulus of Sugrade Reaction (Austin Chalk Formation)	420 psi/in	420 psi/in	420 psi/in	420 psi/in
Reliability	95%	92%	90%	85%
Standard Deviation	0.35	0.35	0.35	0.35
Load Transfer Coefficient	2.9	2.9	2.9	2.9
Drainage Coefficient	1.0	1.0	1.0	1.0
Design Average Daily Traffic (ADT)	60,000	30,000	20,000	12,000
Traffic Growth Rate	3%	3%	3%	3%
Percent Trucks	3%	3%	2%	2%
Lanes	6	4	2	2
Lane Distribution Factor	0.7	1	1	1

I. Alley pavement thickness shall be 8”–5”–8” with pavement strength and reinforcement as shown in the Standard Details.

J. Sidewalk thickness shall be as shown in Table 3.2.

Table 3.2 – Sidewalk Thickness

Sidewalk Width	Thickness of Concrete	Reinforcing
up to 6’	4”	#3 bars @ 18” o.c.e.w. or fiberglass mesh
6’-1” to 7’-11”	5”	#3 bars @ 18” o.c.e.w. or fiberglass mesh
8’ or greater	6”	#3 bars @ 18” o.c.e.w. or fiberglass mesh

K. Fire lane paving shall be designed with the same design inputs as Types D-G streets.

SECTION 4 – DRAINAGE DESIGN REQUIREMENTS

Section 4 – Drainage Design Requirements

4.01 General

A. This section contains the minimum storm drainage design criteria to be followed in the design of storm drainage facilities and demonstrates the design procedures to be used on drainage projects in the City of Frisco.

B. The design factors, formulas, graphs and procedures described are intended to serve as guidelines. Responsibility for the actual design remains with the Engineer. Deviation from the requirements of these standards shall be approved by the Director of Engineering Services.

C. The Engineer shall prepare the design plans in accordance with the standard design checklist.

D. It is the responsibility of the Engineer to provide all necessary calculations and designs described herein. The Engineer shall provide the City the data, calculations, and designs necessary to demonstrate the design does not adversely impact the surrounding or downstream property and meet local, state, and federal rules, regulations, and requirements.

E. The Engineer shall use the city's base models for development along floodplain areas. If a model is not available, the Engineer shall be required to provide a floodplain model in accordance with city standards and guidelines.

4.02 Determining Design Discharge

The Rational Method may be used to determine the runoff generated from a property when a contributing drainage area is less than 200 acres. A unit hydrograph method shall be used to determine the runoff generated from a property with a contributing drainage area greater than 200 acres. The Director of Engineering Services may require developments with contributing drainage areas less than 200 acres to use a unit hydrograph method if the hydrologic results of the contributing drainage area or components within the drainage area more accurately reflect a unit hydrograph.

A. Rational Formula (Drainage Areas < 200 acres)

The Rational Formula for computing peak runoff rates is as follows:

$$Q = C * I * A$$

Q	=	runoff rate (cfs)
C	=	runoff coefficient (dimensionless)
I	=	rainfall intensity (in/hr)
A	=	drainage area (ac)

B. Runoff Coefficient (C)

1. Runoff coefficients shall be based on the future land use plan, which is included in the City's Comprehensive Plan. Runoff coefficients reflecting other conditions may be used based on the guidelines set forth in Section 4.02.F.

2. Table 4.1 provides guidelines for runoff coefficients for typical land use within the city; however, a weighted runoff coefficient may be used for the design if it is more representative of the site conditions.

3. A lower runoff coefficient may be used if sustainable elements are included in the design. The Engineer shall notify Engineering Services of the design intent and provide the necessary data, calculations and design to support the desired runoff coefficient. All sustainable designs are subject to approval by Engineering Services (refer to Section 4.18 for sustainable design options).

Table 4.1 Runoff Coefficients and Inlet Time Guidelines

Land Use	Runoff Coefficient "C"	Inlet Time (Minutes)
Single Family Residential	0.55	15
Two Family, Patio Home, Town Home	0.70	10
Multiple Family	0.80	10
Non-Residential Uses	0.90	10
Park Area	0.35	20
School	0.70	15
Church	0.80	10
Undeveloped	0.30	20
Hospital	0.90	10
Streets	0.90	10

C. Time of Concentration (Tc)

SCS methodology shall be used to determine the time of concentration (Tc). This method separates the flow through the drainage area into sheet flow, shallow concentrated flow, and open channel flow. The Tc is the sum of travel times for sheet flow, shallow flow and open channel flow. The time of concentration flow path and sheet flow path shall be made available to the City upon request.

1. Sheet Flow: The maximum allowable length for sheet flow is 300' for undeveloped drainage areas and 100' for developed areas. When selecting n for sheet flow, consider cover to a height of about 0.1'. This is the only part of the plant cover that will obstruct sheet flow. The T_t in minutes for sheet flow is determined using the following equation:

$$T_t = \frac{0.007(nL)^{0.8}}{(P_2)^{0.5}S^{0.4}}$$

T_t = travel time (hr)
n = Manning's roughness coefficient (Table 4.2)
L = flow length (ft)
P_2 = 2-year, 24-hour rainfall, 3.6in
S = slope of hydraulic grade line (land slope, ft/ft)

Table 4.2 Sheet Flow 'n' Values

Surface Description	n
Smooth surfaces (concrete, asphalt, gravel, or bare soil)	**0.011**
Fallow (no residue)	**0.05**
Cultivated soils	
Residue cover less than 20%	**0.06**
Residue cover greater than 20%	**0.17**
Grass:	
Short Prairie Grass	**0.15**
Dense grasses	**0.24**
Range (natural)	**0.13**
Woods:	
Light underbrush	**0.40**
Dense underbrush	**0.80**

2. Shallow Concentrated Flow

Shallow concentrated flow begins where sheet flow ends. A projected slope should be established along the flow line for the shallow concentrated flow length. The T_t in minutes for shallow concentrated flow is determined by the following equation:

$$T_t = \frac{L}{3600V}$$

T_t = travel time (hr)
L = flow length (ft)
V = velocity (fps)
Unpaved = 16.1345*(S)^0.5
Paved = 20.3282*(S)^0.5

3. Open Channel Flow

Open Channel Flow is where the runoff is located within a defined channel or in some cases, closed storm systems. The T_t for open channel flow is determined using the following equation:

$$T_t = \frac{L}{3600V}$$

$$V = \frac{1.49 r^{\frac{2}{3}} s^{\frac{1}{2}}}{n}$$

T_t = travel time (hr)
V = average velocity (ft/s)
r = hydraulic radius (ft)
A = cross sectional flow (ft^2)
P = wetted perimeter (ft)
s = slope of the hydraulic grade line (channel slope, ft/ft)
n = Manning's roughness coefficient

The Engineer shall compare the calculated time to the time listed in Table 4.1. If the calculated Tc differs from the value in Table 4.1, the Engineer shall provide information to justify the Tc calculations.

D. Rainfall Intensity (I)

The rainfall intensity (I), shall be based on the National Weather Service Rainfall Frequency Data presented in Technical Memorandum NWS Hydro-35, dated June 1977 (2 to 100 year) and U.S. Geologic Survey Frequency Data presented in Water Resources Investigations Report 98-4044, dated 1998 (500 year). The intensity for a particular duration can be obtained using the coefficients from Table 4.3. If the calculated inlet time differs from the value in Table 4.2, the Engineer shall provide information to justify the inlet time calculations.The equation used to determine the intensity values for various storm events and durations is provided below.

$$I = \frac{b}{(Tc + d)^e}$$

Refer to the following table for b, d, and e.

Table 4.3 Intensity Coefficient Table

	2-year	5-year	25 year	100- year
B	81.319	82.686	106.665	112.783
D	15.788	15.497	18.069	17.572
E	0.864	0.820	0.806	0.771

E. Unit Hydrograph Method (Drainage Areas > 200 acres)

1. The use of a unit hydrograph method shall be based upon standard and accepted engineering principles normally used in the profession subject to the approval Engineering Services. Acceptable methods include the Soil Conservation Services (SCS) Technical Release Number 55 (TR-55) for drainage areas 200 acres to 2,000 acres and SCS's Technical Release Number 20 (TR-20), or the United States Army Corps of Engineers HEC-HMS models for drainage areas 200 acres or more.

2. The post development unit hydrograph method shall be based upon fully developed watershed conditions assuming no effects from upstream or on-site detention facilities, unless the requirements set forth in Section 4.03.B are met, or as directed by Engineering Services. The Engineer should discuss the approach method with Engineering Services prior to design.

3. Circumstances that may require the use of a unit hydrograph method include open channels, reclaiming floodplains, creating lakes, regional detention/retention facilities or building other types of drainage related facilities on major drainage courses. The city requires fully developed watershed conditions be used for all modeling. FEMA's flows shall not be used as the flows are generally based upon existing watershed conditions.

4. Coincident peak flows can also be considered using Table 4.4.

Table 4.4: Frequencies for Coincidental Occurrences

Area Ratio	100 year design	
	Main Stream	Tributary
10000:1	2	100
	100	2
1000:1	10	100
	100	10
100:1	25	100
	100	25
10:1	50	100
	100	50
1:1	100	100
	100	100

5. Modeling Requirements

   HEC-HMS shall be used in developing all hydrologic models. Other hydrologic models may be used upon approval from Engineering Services. The following criteria should be used:

   a. 24-hour storm duration using an SCS Type II distribution.

   b. Rainfall values calculated using coefficients provided in Table 4.3.

   c. The SCS Curve Number (CN) method shall be used to determine the loss rate. CN values shall be taken from TR-55.

   d. Tc values shall be calculated as shown in Section 4.02.C.

   e. Muskingum Cunge method shall be used for routing of the Unit Hydrograph through the drainage system. Engineering Services may request for other routing methods, such as the Modified Puls Routing Method, to be used in the design if the method is more characteristic of the hydrologic and hydraulic conditions of the watershed.

F. Runoff from Off-Site Developments

1. Off-site Flows for Developed Upstream Watershed

   The Engineer may take the effects of upstream detention into account if the hydrologic and hydraulic information for the existing upstream ponds are shown on the construction plans and the information can be verified by record drawings or a record survey. An emergency overflow path between the existing detention ponds and the proposed site shall be identified and clearly indicated on the construction plans. The Engineer shall confirm the hydrologic and hydraulic effects of upstream facilities in accordance with Section 4.9.

2. Off-site Flows for Undeveloped Upstream Watershed

   If an undeveloped upstream property exists, the Engineer shall assume fully developed conditions without detention for the off-site area unless a Downstream Assessment shows the downstream facilities cannot convey the fully developed peak flows.

4.03 Downstream Assessment

The design of a storm drain facility must account for the offsite flows that are routed through the development, flows generated by the development, and the impacts of the development and the drainage system on downstream facilities. The storm water discharge from the development shall not cause adverse impacts to adjacent or downstream properties or facilities. In order to determine the impacts to the downstream properties or facilities, a Downstream Assessment may be required. The following summarizes the process for a Downstream Assessment.

Figure 1: Downstream Assessment Flow Chart

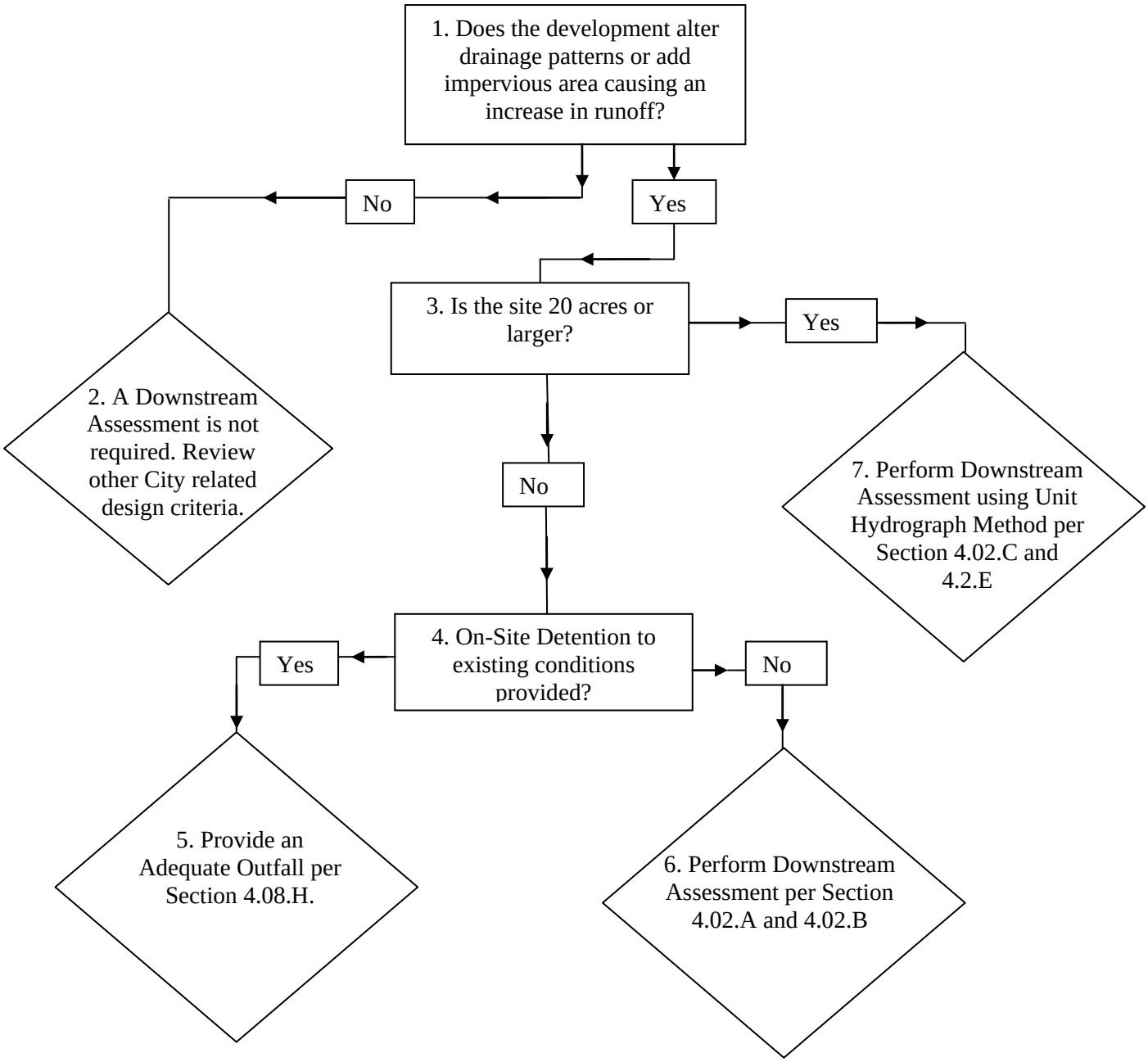

Downstream Assessments shall be prepared and submitted to the City with the construction plans. The study shall demonstrate the development will produce no adverse impacts. No adverse impacts may include, but are not limited to:

a. No new or increased flooding of existing insurable (FEMA) structures (habitable buildings).

b. No increases in water surface elevations for the 2, 5, 25, and 100 year storm events unless contained in existing channel (with freeboard), roadway, drainage easement and ROW. Dry lane and gutter capacity requirements set forth in Section 4.04.A shall also be met.

c. Post-development channel velocities shall not be increased by more than 5% above pre-development velocities. Exceptions to these criteria require a certified geotechnical/geomorphologic study that provides documentation that a higher velocity will not increase erosion.

d. No increases in downstream discharges caused by the proposed development that, in combination with existing discharges, exceeds the existing capacity of the downstream storm drainage system.

e. The Downstream Assessment shall extend to a point downstream where the proposed development creates no adverse impacts. The downstream point is known as the Zone of Influence. The Engineer shall determine how far downstream the analysis for the Downstream Assessment shall extend. For properties less than 20 acres, the Downstream Assessment may use the 10% rule to determine the Zone of Influence. For all other properties, the Zone of Influence will be defined by a detailed hydrologic and hydraulic modeling analysis.

f. The 10% rule states the Zone of Influence can be considered to be the point where the drainage area controlled by the drainage facility comprises 10% of the total drainage area. As an example, if a structural control drains 10 acres, the Zone of Influence ends at a point where the total drainage area is at least 100 acres.

g. If a portion of a larger property is being developed, the Zone of Influence shall be determined based on the entire property.

4.04 Street Capacity

A. Straight Crown Streets:

1. All straight crown street capacities shall be hydraulically designed using Manning's equation:

$$Q = \left(\frac{1.486}{n}\right) A \left(R^{2/3}\right)\left(S^{1/2}\right)$$

Q	=	Gutter flow (cfs)
n	=	Manning's roughness coefficient, (0.0175 for concrete street)
A	=	Cross section flow area (ft^2)
R	=	Hydraulic radius of the conduit in feet, which is the area of the flow divided by the wetted perimeter (R=A/P)
P	=	Wetted perimeter (ft)
S	=	Slope of the hydraulic gradient (ft/ft)

2. The City requires a minimum of 9' of pavement in each direction during the 100-year event for Type A and B thoroughfares.

3. The dry lane criteria shall be met in both the interim and future conditions.

B. Parabolic Crown Streets

1. All parabolic crown street capacities shall be hydraulically designed using Manning's equation.

2. During a 100 year storm event, the gutter depth on Type C, D, E, F, and G thoroughfares are required by the City not to exceed 6" or top of curb, whichever is less.

3. During a 100-year storm event, the City requires a minimum of 9' of pavement in each direction for Type C and D thoroughfares.

4.05 Alley Capacity

A. All alley capacities shall be hydraulically designed using Manning's equation.

B. The 100 year storm event shall be contained within the edge of pavement.

C. In residential areas where the standard alley section capacity is exceeded, storm sewer systems with inlets shall be provided.

D. Grate combination inlets shall be located in alleys upstream from an intersection and where necessary to prevent water from entering intersections in amounts exceeding allowed street capacity.

4.06 Valley Gutters

A. The use of valley gutters to convey storm water across a street intersection is subject to the following criteria:

1. Valley gutters shall not cross Type A, B, C, and D thoroughfares.

2. At any intersection, valley gutters perpendicular to the main street will not be permitted; and valley gutters parallel to the main street may only cross a lower classified street.

4.07 Inlet Location and Capacity

A. Gutter Flow

Curb inlets shall be placed to ensure that the 100 year flow in a street does not exceed the dry lane requirements for straight crown streets and top-of-curb elevation for parabolic crown streets as per Sections 4.04. The following form of the Manning's equation should be used to evaluate gutter flow hydraulics:

$$Q = \left[\frac{0.56}{n}\right] Sx^{5/3} S^{1/2} T^{8/3}$$

Q = Gutter flow rate (cfs)
S_x = Pavement cross slope (ft/ft)

S = Longitudinal slope (ft/ft)
T = Width of flow in roadway (ft)
n = Manning's roughness coefficient

Depth of flow in the gutter can be calculated using the following modified form of the equation above:

$$y_o = z\left(\frac{QnS_x}{S^{1/2}}\right)^{3/8}$$

y_o = depth of water in the curb and gutter cross section (ft or m)
Z = 1.24

If the flow in the gutter is still excessive, the storm sewer shall be extended to a point where the gutter flow can be effectively intercepted by curb inlets.

B. Capacity of Curb Inlet on Grade

To determine the capacity of a curb inlet on grade, first determine the ratio of the flow in the locally depressed gutter section to the total flow in the road.

$$E_0 = 1/\left\{1 + \frac{S_w}{S_X}\left[\left(1 + \frac{S_w/S_x}{(T/W) - 1}\right)^{2.67} - 1\right]^{-1}\right\}$$

E_0 = Ratio of flow in the depressed gutter to the total flow
S_W = Gutter cross slope (ft/ft)
S_x = Roadway cross slope (ft/ft)
T = Width of flow in roadway (ft)
W = Width of depressed gutter section (ft)

Then calculate the equivalent cross slope at the depressed curb inlet opening.

$$S_e = S_x + \frac{a}{w}E_0$$

S_e = Equivalent cross slope (ft/ft)
S_x = Roadway cross slope (ft/ft)
a = Gutter Depression Depth (ft)
W = Width of depressed gutter section (ft)
E_0 = Ratio of flow in the depressed gutter to the total flow

Then calculate the inlet length required to capture 100% of the gutter flow.

$$L_T = 0.60Q^{0.42}S^{0.3}\left(\frac{1}{nS_e}\right)^{0.6}$$

L_T = Required length of inlet (ft)
Q = Total flow in the roadway (cfs)

S = Roadway longitudinal slope (ft/ft)
n = Manning's roughness coefficient
S_e = Equivalent cross slope (ft/ft)

The efficiency of a curb inlet opening shorter than L_T is:

$$E = 1 - \left(1 - \frac{L}{L_T}\right)^{1.8}$$

E = Inlet efficiency
L = Length of the curb inlet opening (ft)
L_T = Required length of inlet to capture 100% of the roadway flow (ft)

The total flow captured by the curb inlet is:

$$Q_i = EQ$$

Q_i = Flow capture by inlet (cfs)
E = Inlet efficiency
Q = Total flow in the roadway (cfs)

C. Capacity of Curb Inlets in Sag

The capacity of a curb inlet in sag depends on the water depth at the curb opening and the height of the curb opening. The inlet operates as a weir to a depth equal to the curb opening height and as an orifice at depths greater than 1.4 times the opening height. At depths between 1.0 and 1.4 times the opening height, flow is in a transition stage and the capacity should be based on the lesser of the computed weir and orifice capacities.

1. If the depth of flow in the gutter (d) is less than or equal to 1.4 times the inlet opening height (h), ($d \leq 1.4H$), determine the length of inlet required considering weir control. Calculate the capacity of the inlet when operating under weir conditions with the following equation:

$$Q = C_W(L + 1.8W)d^{1.5}$$

2. Rearrange above equation to produce the following relation for curb inlet length required:

$$L = \left(\frac{Q}{C_w {y_o}^{1.5}}\right) - 1.8W$$

Q = total flow reaching inlet (cfs)
C_w = weir coefficient (3.0)
y_o = head at inlet opening (ft)
L = length of curb inlet opening (ft)
W = lateral width of depression (ft)

$$y_o = z\left(\frac{QnS_x}{S^{1/2}}\right)^{3/8}$$

y_o = depth of water in the curb and gutter cross section (ft or m)
Q = gutter flow rate (cfs)
n = Manning's roughness coefficient
S = longitudinal slope (ft/ft)
S_X = pavement cross slope (ft/ft)
Z = 1.24

3. If the depth of flow in the gutter is greater than the inlet opening height (d>h), determine the length of inlet required considering orifice control. The equation for interception capacity of a curb opening as an orifice follows:

$$Q = C_0 h L \sqrt{2 g d_e}$$

Q = total flow reaching inlet (cfs)
C_0 = orifice coefficient = 0.70
h = depth of opening (ft) (this depth will vary slightly with the inlet detail used)
L = length of curb opening inlet (ft.)
g = acceleration due to gravity = 32.2 ft/s^2
d_e = effective head at the centroid of the orifice (ft) d_e=d - h/2

Rearranging equation allows a direct solution for required length:

$$L = \frac{Q}{C_0 h \sqrt{2 g d_e}}$$

4. If both steps 1 and 2 were performed (i.e., h<d≤1.4h), choose the larger of the two computed lengths as being the required length.

5. Select a standard inlet length that is greater than the required length.

D. Capacity of Wye Inlets

$$\frac{Q}{P} = 3.1 y^{3/2}$$

Q = flow (cfs)
P = perimeter of opening (ft)
y = head/depth (ft)

Wye (drop) inlets shall be located to collect water on non-paved areas where it is not practical to use a headwall. No double Wye inlets shall be allowed.

E. Curb Inlet Placement

1. Placing several curb inlets at a single location is only permitted in areas with steep grades (4% or greater) to prevent flooding and avoid exceeding street capacity in flatter reaches downstream.

2. No more than 20' of inlet shall be constructed at one location along one curb line.

3. Curb inlets shall be placed upstream from right angle turns and street intersections.

4. An emergency overflow path shall be provided on the plans for sag locations. An emergency overflow path is the path the storm water will take if the drainage facility becomes clogged or ceases to function as designed. The emergency overflow path must be located within public right-of-way or within a drainage easement.

5. Curb inlet depth shall not be less than 4.5’ from top of curb for all public improvements.

6. Inlets are required at the low point of a superelevation to prevent flow across the roadway.

7. Multiple sag inlets shall be located no closer than 300’.

FIGURE 2: Inlet Spreadsheet

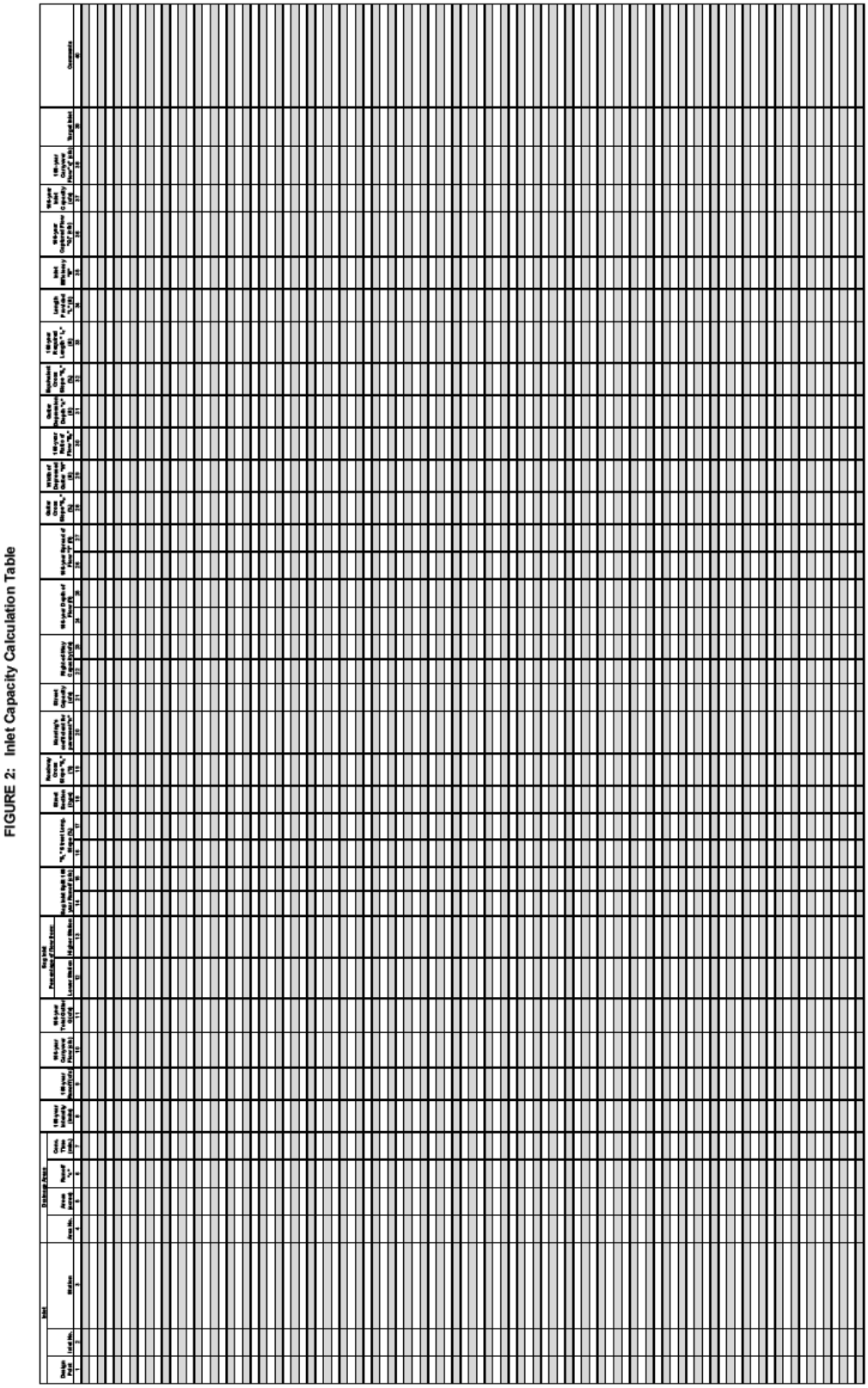

F. The Inlet Spreadsheet provided in Figure 2 shall be provided with the construction plans for review by the City. A description of each of the columns shown in the inlet spreadsheet is provided below:

- Column 1: Design Point for Inlet
- Column 2: Inlet number
- Column 3: Location of inlet by storm drain station number
- Column 4: Drainage area designation for incremental area
- Column 5: Drainage area size (acres)
- Column 6: Runoff coefficient (C)
- Column 7: Time of concentration (minutes)
- Column 8: 100-year intensity (in/hr)
- Column 9: 100-year runoff, Q=CIA (cfs)
- Column 10: 100-year carryover flow from upstream inlet (cfs)
- Column 11: 100-year total gutter flow (Column 9 + Column 10) (cfs)
- Column 12: Percentage of flow traveling from lower station side of sag inlet based on percentage of drainage area and carryover flow from that side (cfs)
- Column 13: Percentage of flow traveling from higher station side of sag inlet based on percentage of drainage area and carryover flow from that side (cfs)
- Column 14: 100-year total gutter flow reaching the lower station side of the sag inlet (Column 11 times Column 12) (cfs)
- Column 15: 100-year total gutter flow reaching the higher station side of the sag inlet (Column 11 times Column 13) (cfs)
- Column 16: Longitudinal slope of the approach gutter. For sag inlets, half the longitudinal slope of the approach gutter on the lower station side of the inlet (S_0) (ft/ft)
- Column 17: Not used for on-grade inlets. For sag inlets, half the longitudinal slope of the approach gutter on the higher station side of the inlet (S_0) (ft/ft)
- Column 18: Street crown section type (straight crown [“rooftop”] or parabolic)
- Column 19: Roadway cross slope “Sx” (%)
- Column 20: Manning’s roughness coefficient (n) for pavement (0.0175 for concrete pavement)

- Column 21: Street capacity based on Manning's equation. For sag inlets calculate the street capacity for both the lower and higher station sides of the inlet and use the greater of the two. (cfs)

- Column 22: Total right-of-way capacity as a function of the cross-sectional area of the right-of-way at the inlet. For sag inlets, the total right of way capacity on the lower station side of the inlet. (cfs)

- Column 23: Not used for on-grade inlets. For sag inlets, the total right of way capacity on the higher station side of the inlet. (cfs)

- Column 24: Depth of gutter flow "yo" in approach gutter from spread of water or from direct solution of Manning's equation for gutter capacity. For sag inlets, the depth of gutter flow on the lower station side of the inlet. (ft)

- Column 25: Not used for on-grade inlets. Depth of gutter flow "yo" in approach gutter from spread of water or from direct solution of Manning's equation for gutter capacity. For sag inlets, the depth of gutter flow on the higher station side of the inlet. (ft)

- Column 26: Spread of water (T) or width of ponding in the gutter measured from the face of curb. Column 19 times column 24, or the distance from the gutter to the crown, if the crown height is exceeded. For sag inlets, the spread of flow on the lower station side of the inlet. (ft)

- Column 27: Not used for on-grade inlets. Spread of water (T) or width of ponding in the gutter measured from the face of curb. Column 19 times column 25, or the distance from the gutter to the crown, if the crown height is exceeded. For sag inlets, the spread of flow on the higher station side of the inlet. (ft)

- Column 28: Gutter cross slope (Sw) (%)

- Column 29: Width of depressed gutter section (ft)

- Column 30: 100-year ratio of flow in the depressed gutter to the total flow (E_0)

- Column 31: Gutter depression depth (a) (ft)

- Column 32: Equivalent cross slope (Se) (%)

- Column 33: 100-year inlet length required to capture 100% of the gutter flow (L_T) (ft)

- Column 34: Actual length (L) in feet of inlet which is to be provided (10', 15' or 20'). For wye inlets the length provided is equal to the perimeter of the opening intercepting flow. The length for wye inlets may be less than the total perimeter if the wye is not located in a sag location.

- Column 35: Efficiency of a curb inlet where the length provided is shorter than the length required. (E)

- Column 36: Discharge (Q) in cubic feet per second which the inlet in question actually intercepts.

- Column 37: Discharge capacity of the inlet (Q) (cfs)
- Column 38: Carryover flow (q) is the amount of water which passes the inlet in a 100-year storm. A substantial portion of the 100-year flow should be picked up by the inlet. The carry-over flow should be accounted for in further downstream inlets and should be reflected in the inlet bypass flow in the Storm Drain Hydraulics Table (minor variances may occur due to travel time routing in the Hydraulics Table).
- Column 39: Downstream inlet that carryover flow travels to
- Column 40: Important comments relating to inlet

4.08 Design of Enclosed Storm Sewer System

A. Design Flow

All enclosed systems shall be hydraulically designed and all required calculations shall be provided on the construction plans. The hydraulic gradient and full-flow velocity shall be calculated using the design flow, appropriate pipe size, and Manning's equation:

$$Q = \left(\frac{1.486}{n}\right) A \left(R^{2/3}\right)\left(S^{1/2}\right)$$

Q	=	Runoff rate (cfs)
A	=	Cross sectional area of the conduit (ft^2)
n	=	Manning's roughness coefficient (0.013 for concrete)
R	=	Hydraulic radius (ft) (Area of conduit divided by wetted perimeter (R=A/P)
S	=	Slope of the hydraulic gradient (ft/ft)

B. Hydraulic Gradient

1. The City requires that all hydraulic gradient calculations begin at the outfall of the system.

2. The starting hydraulic grade line (HGL) shall be based upon the results of the Downstream Assessment per Section 4.03.B. if a downstream assessment is conducted. The results of the Downstream Assessment will provide the Engineer with the capacity and resulting design storm of the downstream facilities.

3. The starting HGL at an outfall into a creek or channel shall be the 100-year fully developed water surface unless an approved flood hydrograph is available to provide a coincident flow elevation for the system's peak.

4. When a proposed storm sewer is to connect to an undersized existing storm sewer system, calculation of the hydraulic gradient for the proposed storm sewer shall start at the outfall of the existing storm sewer system.

C. Hydraulic Design

1. The hydraulic grade line (HGL) must be calculated for all storm drain mains and laterals using appropriate head loss equations. In all cases, the storm drain HGL must remain below lime treated subgrade and must be at least 1' below top of curb at each inlet.

2. In partial flow conditions, the HGL represents the actual water surface within the pipe. The velocity of the flow should be calculated based on actual area of flow, not the full flow area of the pipe or box.

3. Unless partial flow conditions exist, the beginning hydraulic gradient shall begin at either the top of pipe or at the hydraulic gradient of the receiving stream at the coincident frequency, whichever is higher.

D. Lateral Design

1. The HGL shall be calculated for all proposed laterals and inlets, and for the existing laterals being connected into a proposed drainage system.

2. Laterals shall intersect the storm drain at standard angles.

E. Velocity Head Losses (H_L)

1. Adjustments are made in the HGL whenever the velocity in the main changes due to conduit size changes or discharge changes. Laterals in partial flow must be designed appropriately and the partial flow velocity shall be used in the calculations.

2. In determining the HGL for the lateral, begin with the hydraulic grade of the trunk line at the junction plus the HL due to the velocity change. Where the lateral is in full flow, the hydraulic grade is projected along the friction slope calculated using Manning's Equation.

3. HL losses or gains for wyes, pipe size changes, and other velocity changes will be calculated by the following formulas:

$$H_L = \left[\frac{(V_2)^2}{2g}\right] - \left[\frac{(V_1)^2}{2g}\right]$$

H_L = Head loss or gain (ft)
v_1 = Upstream velocity (fps)
v_2 = Downstream velocity (fps)
g = Gravity constant (32.2 ft/s^2)

4. H_L for pipe in full flow at manholes, bends, and inlets, where the flow quantity remains the same, shall be calculated as follows:

$$H_L = K_j \left[\frac{V^2}{2g}\right]$$

H_L = Head loss or gain (ft)
v = Velocity in the lateral (fps)
g = Gravity constant (32.2 ft/s^2)
K_j = Coefficient of loss per Table 4.5

5. Head losses or gains at manholes and junction boxes where there is an increase in flow quantity shall be calculated as follows:

$$H_L = \left[\frac{(V_2)^2}{2g}\right] - K_j \left[\frac{(V_1)^2}{2g}\right]$$

H_L = Head loss or gain (ft)
v_1 = Upstream velocity (fps)
v_2 = Downstream velocity (fps)
g = Gravity constant (32.2 ft/s^2)
K_j = Coefficient of loss per Table 4.4

Table 4.5 Velocity Head Loss in Closed Conduits

Inlet		
Schematic		**Kj**
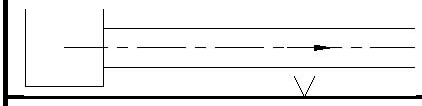		1.25
Manhole at Change in Pipe Direction		
Schematic	**Angle**	**Kj**
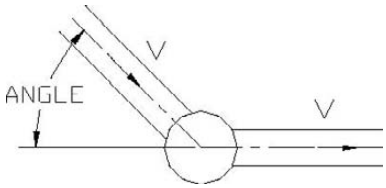	90°	0.55
	60°	0.48
	45°	0.42
	30°	0.30
	0°	0.05
Bend in Pipe		
Schematic	**Angle**	**Kj**
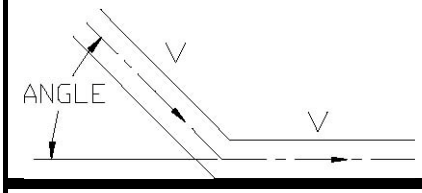	45°	0.35
	30°	0.20
Manhole		
Schematic	**Angle**	**Kj**
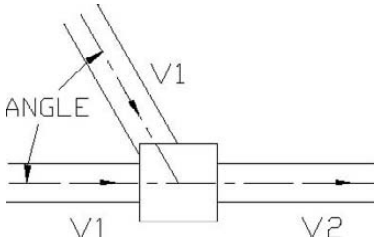	0°	1.00
	22 1/2°	0.75
	45°	0.50
	60°	0.35
	90°	0.25

FIGURE 3 Storm Drain Calculations Spreadsheet

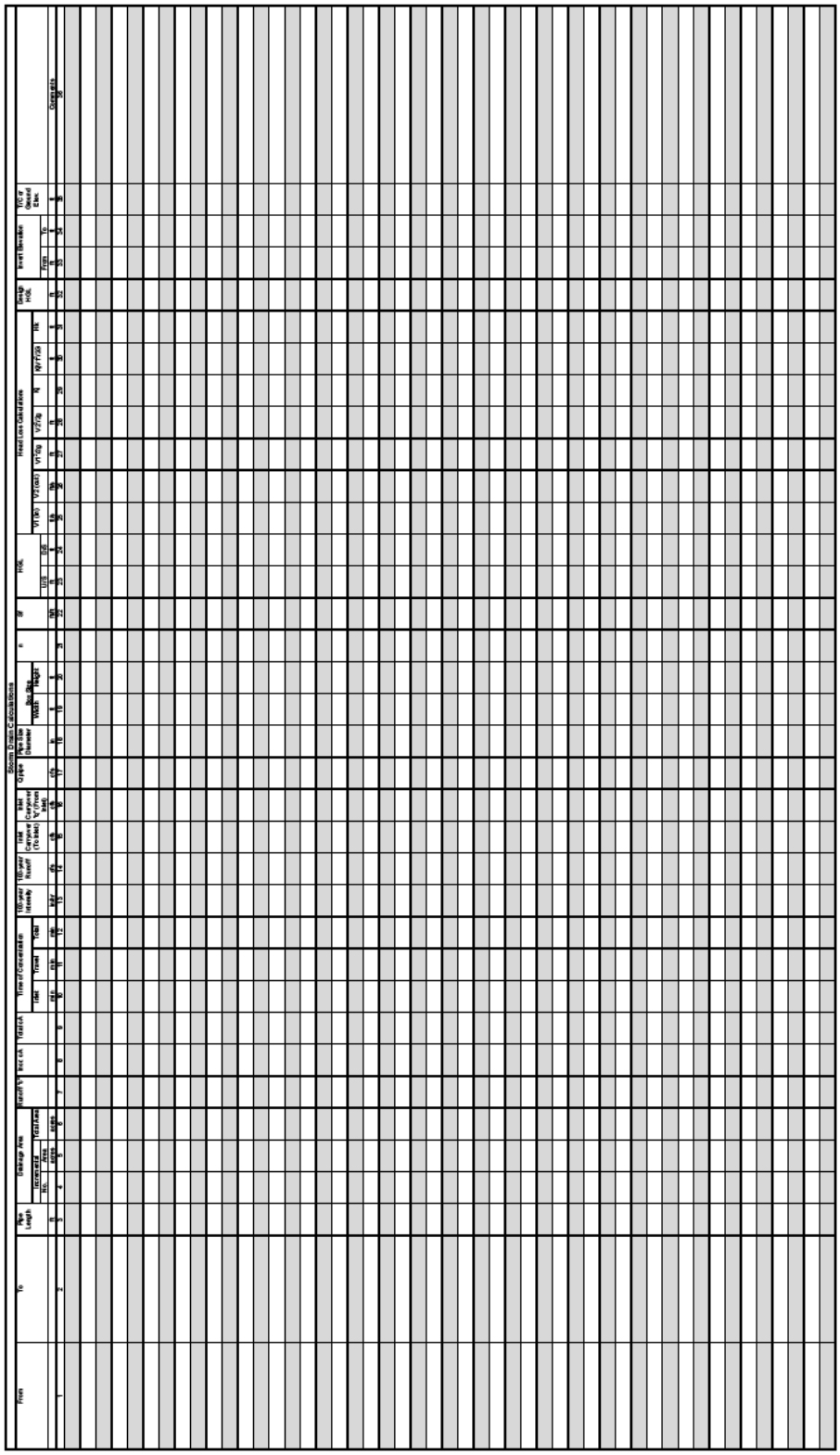

FIGURE 3: Storm Drain Calculations Spreadsheet

The Engineer shall include a completed Storm Drain Calculations Spreadsheet (see Figure 3) in the construction plans. A description of the runoff calculations is provided below followed by a description of the hydraulic design calculations:

- Column 1: Enter the downstream storm drain station number.
- Column 2: Enter the upstream storm drain station number. This is the design point. Design should start at the farthest upstream point.
- Column 3: Enter the distance (in feet) between the storm drain stations.
- Column 4: Enter the designation of the drainage area(s) at the design point in Column 2 corresponding to the designations shown on the drainage area map.
- Column 5: Enter the area in acres for the drainage area identified in Column 4.
- Column 6: Enter the total drainage area in acres within the system corresponding to storm drain station shown in Column 2.
- Column 7: Enter the runoff coefficient "C" for the drainage area shown in Column 5.
- Column 8: Multiply Column 5 by Column 7 for each area.
- Column 9: Determine the total "CA" for the drainage system corresponding to the inlet or manhole shown in Column 2.
- Column 10: Determine inlet time of concentration.
- Column 11: Determine flow time in the storm drain in minutes. The flow time is equal to the distance in Column 3 divided by 60 times the velocity of flow through the storm drain in ft/sec.
- Column 12: Total time of concentration in minutes. Column 10 plus Column 11. Note that time of concentration only changes at a downstream junction with another drainage area(s). It remains the same from an inlet or junction to the next inlet or junction picking up additional drainage areas. The junction of two paired inlets with each other is not a downstream junction.
- Column 13: The intensity of rainfall in inches per hour for the 100-year storm frequency.
- Column 14: The 100-year storm runoff in cfs. Column 9 times Column 13.
- Column 15: The proposed inlet carryover from upstream inlets during a 100-year storm. This should generally correspond to the carryover flow in Column 10 of the Inlet Spreadsheet (minor variances may occur due to travel time routing in the Hydraulics Table).
- Column 16: The proposed inlet carryover during a 100-year storm. This should generally correspond to the carryover flow "q" in Column 38 of the Inlet Spreadsheet (minor variances may occur due to travel time routing in the Hydraulics Table).
- Column 17: Design Discharge for the storm drain system ("Qpipe") in cfs

- Column 18: Enter the selected pipe size for circular pipe.
- Column 19: Enter the selected width for box pipe.
- Column 20: Enter the selected height for box pipe.
- Column 21: Enter the appropriate Manning's roughness coefficient "n" (0.013 for concrete pipe and box culverts).
- Column 22: Enter the slope of the frictional gradient (hydraulic gradient) determined by Manning's equation. In a partial flow condition, the friction slope is the slope of the water surface and should follow the slope of the pipe.
- Column 23: This is the upstream HGL before the structure and is calculated as Column 24 plus the friction loss (Column 3 times Column 22).
- Column 24: This is the beginning hydraulic gradient of the line. It is equal to the Design HGL (Column 32) for the next downstream segment, or the beginning HGL of the system as described above.
- Column 25: Velocity of flow in incoming pipe at the junction, inlet or manhole at the design point identified in Column 2.
- Column 26: Velocity of flow in outgoing pipe (i.e. the pipe segment being analyzed) at junction, inlet or manhole at design point identified in Column 2.
- Column 27: Velocity head of the velocity in Column 25.
- Column 28: Velocity head of the velocity in Column 26.
- Column 29: Head loss coefficient "Kj", at junction, inlet or manhole at design point from Table 4.5.
- Column 30: Multiply Column 27 by Column 29.
- Column 31: Head Loss at Structure. At a junction or change in pipe size, this is Column 28 minus Column 30. At a bend or inlet, this is Column 26 times Column 29. In all cases this is 0.10' minimum.
- Column 32: Design HGL at the design point identified in Column 2. Column 24 plus Column 31. This is the beginning HGL (Column 24) for any upstream pipe discharging into that junction.
- Column 33: Invert elevation for the pipe being analyzed at the downstream storm drain station in Column 1.
- Column 34: Invert elevation for the pipe being analyzed at the design point (upstream storm drain station) in Column 2.
- Column 35: Top of curb elevation at the design point in Column 2.
- Column 36: Comments regarding pipe being analyzed.

F. Storm Drain

1. Alignments of proposed storm drain systems shall use existing easements and rights-of-way. If located within an easement, the storm sewer shall be centered within the easement. If located within rights-of-way, the centerline of the storm sewer shall be located under paving 7' from the back of curb. No part of the storm sewer is to be designed within the lime-treated subgrade of a proposed pavement.

2. Horizontal and vertical curve design for storm sewers shall take into account joint closure.

3. A minimum full flow velocity of 2.5 fps and a minimum slope of 0.5% shall be maintained in the pipe unless otherwise approved by the Director of Engineering Services.

4. Only standard sizes shall be used. The minimum allowable pipe size is 18". Pipe sizes shall not be decreased in the downstream direction, unless otherwise approved by the Director of Engineering Services.

5. In situations where only the lower portion of an enclosed storm sewer system is being built, stub-outs for future connections must be included.

6. The required storm drain capacity to meet existing and future needs, if applicable, shall be provided.

G. Manhole Placement

The following is a list of guidelines governing the placement of storm sewer manholes to ensure adequate accessibility of storm drainage system:

1. Storm sewer lines shall have points of access no more than 500' apart. A manhole shall be provided where this condition is not met.

2. A manhole shall be required where two or more pipes connect into a main at the same joint.

3. A manhole shall be located where pipe sizes or slopes change unless otherwise approved by the Director of Engineering Services.

H. Outfall Design

The Engineer shall demonstrate the drainage from the site is conveyed to an adequate outfall. An adequate outfall is a structure or location that is adequately designed as to not cause adverse flooding conditions, erosion, or any other adverse impacts. An adequate outfall shall also have capacity to convey the increased runoff.

4.09 Detention/Retention Facility Design

A. Detention facilities shall be designed based upon the following minimum criteria:

1. Detention shall be provided for the 2, 5, 25, and 100 year design storms based on the results of a downstream assessment. Sites without a downstream assessment will be required to provide detention to undeveloped runoff rates.

2. Pilot channels may be required for detention facilities for maintenance purposes if the bottom slope is less than 2%. The Engineer shall provide a maintenance plan for the detention

facility as part of the design. The maintenance plan shall indicate the ingress and egress locations to enter and maintain the pond, maintenance roles and responsibilities, contact information for the party responsible for the maintenance, and a maintenance schedule.

3. Criteria established by the State of Texas for dam safety (TAC Title 30, Part 1, Chapter 299) and impoundment of state waters (Texas Water Code Chapter 11) shall apply where required by the state, and where, in the Engineer's judgment, the potential hazard requires these more stringent criteria.

B. Should the Downstream Assessment results show that downstream facilities are adequate and on-site detention is not required, fully developed off-site conditions must be taken into account for the on-site design facilities.

C. All detention/retention facilities shall demonstrate and provide an adequate outfall in accordance with City Requirements.

D. Detention Storage Calculation

1. Detention facilities without upstream detention areas and with drainage areas of 20 acres or less can be designed using the Modified Rational Method otherwise the Unit Hydrograph Method shall be used.

2. If the Unit Hydrograph Method is used, the model shall extend through the Zone of Influence (see Section 4.03) and include existing detention facilities within the Zone of Influence watershed.

3. No required parking space or fire lane may be located within a surface drainage pond. A maximum depth of 6" of ponded water is allowed in the parking lot.

E. Pond and Spillway Geometry

1. Detention structures shall have a minimum of 1' of freeboard above the 100-year water surface elevation.

2. Where embankments are used to temporarily impound detention, the effective crest of the embankment will be a minimum of 2' above the 100-year water surface elevation.

3. The steepest side slope permitted for a vegetated embankment is 4:1.

4. Earth embankments used to temporarily or permanently impound surface water must be constructed according to specifications as required based on geotechnical investigations of the site and all regulatory requirements.

5. Detention facilities shall be designed with an emergency spillway in case the primary outfall ceases to function as designed. The spillway shall be designed to pass a minimum of the 100-year flood event.

6. The detention facility bottom must be designed to provide positive drainage.

7. Access shall be provided to the banks and bottom of a detention facility for maintenance.

   a. Engineer shall provide an operations and maintenance plan that will detail access.

b. Facilities with permanent pools shall address dewatering procedures.

8. It is the responsibility of the Engineer to consider pedestrian and vehicular safety in the design of detention facilities. Perimeter rails or fencing may be required.

9. Underground detention facilities shall be designed with reinforced concrete if located under fire lane or within city right of way.

F. Texas Commission Environmental Quality Requirements for Dams

The Texas Commission on Environmental Quality (TCEQ) provides design and review criteria for construction plans and specifications, construction, operation and maintenance, inspection, repair, removal, emergency management, site security, and enforcement of dams. As of the date of these design standards, dams that fall under TCEQ dam safety regulations meet the following criteria:

- have a height greater than or equal to 25', and a maximum storage capacity greater than or equal to 15 acre-feet
- have a height greater than 6', and a maximum storage capacity greater than or equal to 50 acre-feet

Figure: 30 TAC §299.1(a)(2)

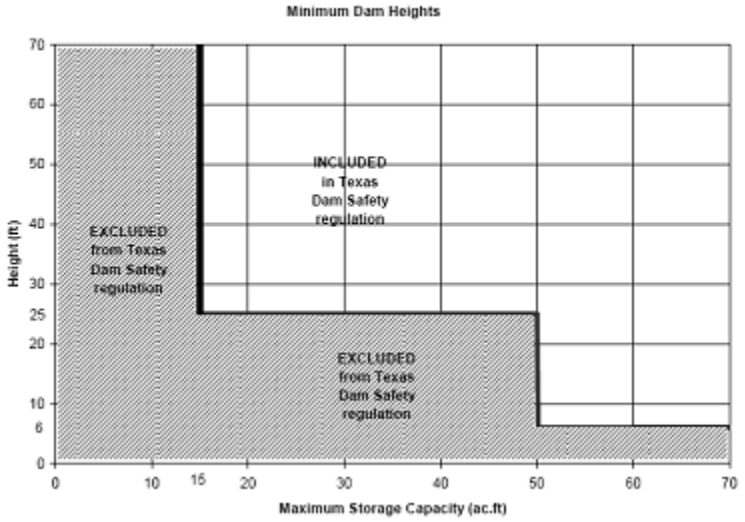

The design engineer shall refer to the Texas Administrative Code, Title 30, Part 1, Chapter 299 Dams and Reservoirs for current dam safety criteria. All proposed construction or modification of dams are required to adhere to TCEQ dam safety criteria. Should the design engineer desire to utilize an existing facility that would qualify under this criteria and the use of the facility changes from an agricultural use to another use, the existing facility may need to be brought into compliance with the TCEQ dam safety criteria. If dams that fall under the TCEQ dam safety criteria, the City will require review and approval from TCEQ prior to authorizing construction.

Water features and detention facilities with permanent pools must obtain a TCEQ water rights permit if applicable. Refer to TCEQ for water rights regulations.

For permanent pool ponds without a water rights permit, the Engineer shall provide a signed statement to the City stating the water rights permit is not required.

4.10 Miscellaneous Drainage Requirements

A. Lot Drainage - Lot to lot surface drainage is prohibited. Pad elevations shall be no less than 12" above curb elevation. Figure 4 is provided below for reference when performing lot grading designs. Lot grading type and finished floor elevations shall be shown on the construction plans. Type B and Type C Lot Grading must back to alleys, open space, or drainage easement. Type C Lot Grading may only be used with approval of Engineering Service. Refer to the International Residential Building Code (IRC) Section 401.3 (latest version) for additional requirements.

Figure 4
Typical Lot Grading Patterns

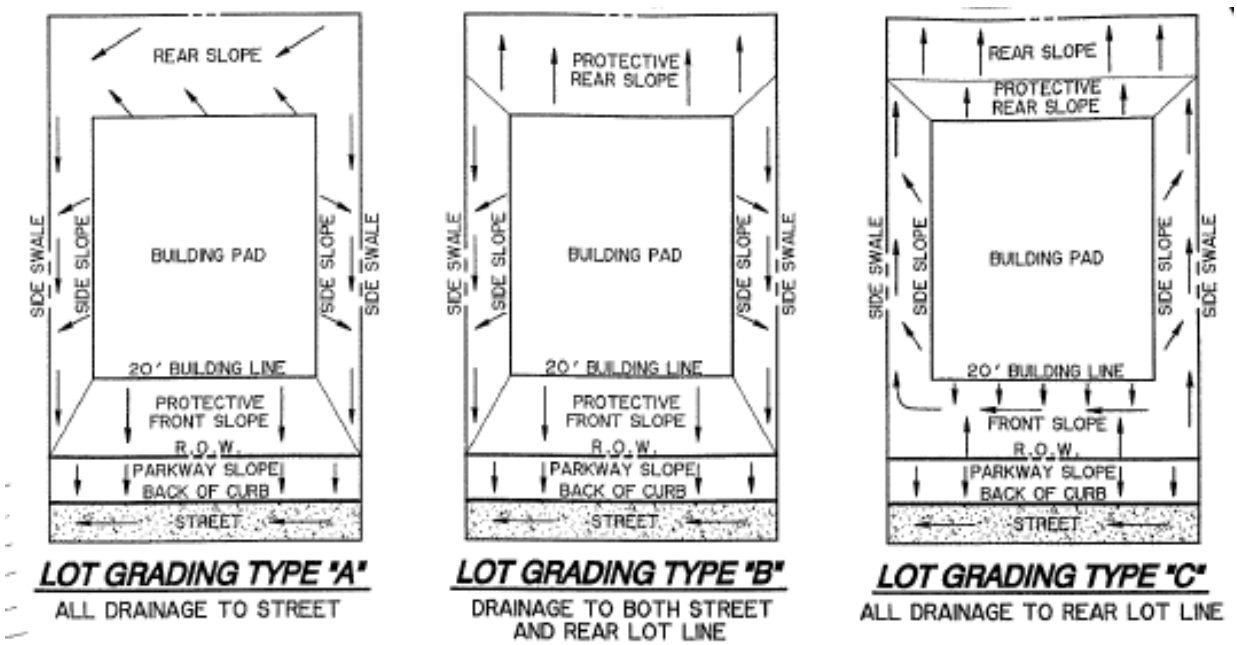

B. Storm Drain Materials

1. All public storm sewers shall be reinforced concrete.

2. All storm sewers under a fire lane or roadway and within a drainage easement shall be reinforced concrete. Any structure under a fire lane must be designed to withstand applicable loadings, including loading of a fire apparatus.

C. The minimum finished floor elevation for any lot adjacent to a drainage feature shall be 2' above the adjacent 100 year fully developed water surface elevation and shall be shown on the final plat.

D. Should mitigation be required under Section 404 of the Clean Water Act, the areas shall be identified on the engineering construction plans.

E. Refer to Section 4.15 for floodplain reclamation requirements.

4.11 Open Channel Design

Excavated open channels may be used to convey storm waters where the construction costs and/or long-term maintenance cost involved with a closed storm sewer system is not justified economically. Open channels shall be designed to convey the full design discharge.

The allowable excavated channel cross section is shown on Figure 5. The maximum velocities allowed for various types of excavated channel cover are shown in Table 4.6. These maximum velocities do not apply for drainage facilities discharging off-site. A downstream assessment in accordance with Section 4.03.B shall be performed to determine maximum discharge velocities.

FIGURE 5: Open Channels -Excavated

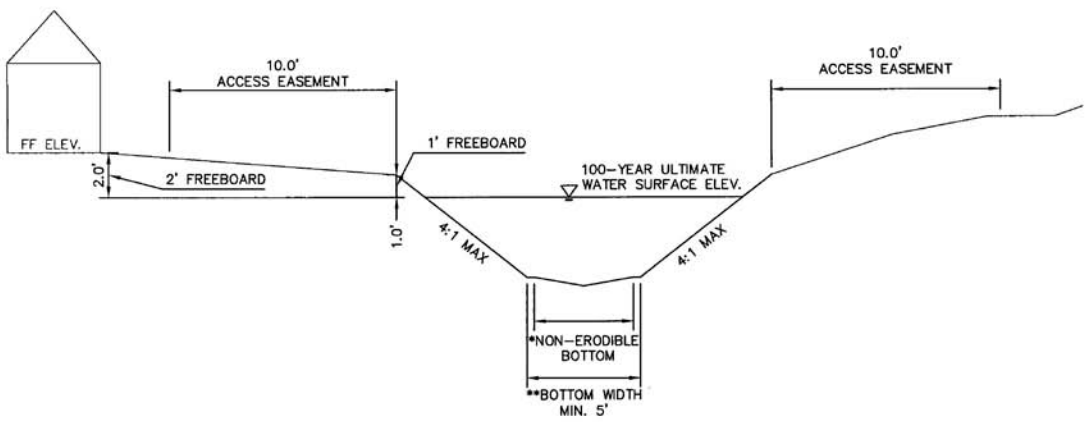

*NON-ERODIBLE BOTTOM SHALL BE DESIGNED BY THE ENGINEER AND DOCUMENTATION AND CALCULATIONS SHALL BE PROVIDED TO CITY STAFF FOR REVIEW. GRADES SHALL ENSURE POSITIVE DRAINAGE THROUGHOUT THE CHANNEL.

**MINIMUM BOTTOM WIDTH SHALL BE BASED UPON PROJECT SPECIFIC CHANNEL MAINTENANCE NEEDS. BOTTOM WIDTHS SMALLER THAN WHAT IS SHOWN SHALL BE APPROVED BY THE DIRECTOR OF ENGINEERING SERVICES.

THE DIRECTOR OF ENGINEERING SERVICES MAY REQUIRE HYDRAULIC MODELING OF THE CONSTRUCTED CHANNEL TO CONSIDER A MANNINGS VALUE THAT REFLECTS A "MAINTAINED CHANNEL (0.25-0.35)" AND A "NON-MAINTAINED CHANNEL (0.35-0.055)".

A. Unlined unvegetated excavated channels are not allowed. Construction of excavated channels will not be considered complete until the channel banks are stabilized. Vegetation selected for channel cover must conform with allowable vegetation from the Approved Material List.

B. Supercritical flow shall not be allowed in channels except at drop structures and other energy dissipators.

C. At transitions in channel characteristics, velocities must be reduced to the maximum velocity per the downstream assessment in accordance with Section 4.03.B. Velocities must be reduced before the flow reaches the natural channel using either energy dissipators and/or wider less steep channel.

D. Channel armoring for erosion control shall be provided where deemed necessary by the Director of Engineering Services.

E. If the channel cannot be maintained from the top of the bank, a maintenance access ramp shall be provided and included within the drainage easement.

F. Minimum channel bottom widths are recommended to be equal to twice the depth of the channel. Any permanent open channel shall have a minimum bottom width of 5'.

G. All open channels require a minimum freeboard of 1' freeboard.

H. The minimum slope for an excavated improved channel is 1% unless a pilot channel is constructed, or otherwise approved by the Director of Engineering Services.

Table 4.6 provides allowable ranges for roughness coefficients of open channels.

Table 4.6 Channel Roughness Coefficients

Channel Description	Roughness Coefficient		
	Minimum	**Normal**	**Maximum**
Minor Natural Streams			
Moderately Well Defined Channel			
-grass and weeds, little brush	0.025	0.030	0.033
-dense weeds, little brush	0.030	0.035	0.040
-weeds, light brush on banks	0.030	0.035	0.040
-weeds, heavy brush on banks	0.035	0.050	0.060
-weeds, dense willows on banks	0.040	0.060	0.080
Irregular Channel with Pools and Meanders			
-grass and weeds, little brush	0.030	0.036	0.042
-dense weeds, little brush	0.036	0.042	0.048
-weeds, light brush on banks	0.036	0.042	0.048
-weeds, heavy brush on banks	0.042	0.060	0.072
-weeds, dense willows on banks	0.048	0.072	0.096
Flood Plain, Pasture			
-short grass, no brush	0.025	0.030	0.035
-tall grass, no brush	0.030	0.035	0.050
Flood Plain, Cultivated			
-no crops	0.025	0.030	0.035
-mature crops	0.030	0.040	0.050
Flood Plain, Uncleared			
-heavy weeds, light brush	0.035	0.050	0.070

Channel Description	Roughness Coefficient		
	Minimum	**Normal**	**Maximum**
-medium to dense brush	0.070	0.100	0.160
-trees with flood stage below branches	0.080	0.100	0.120
Major Natural Streams			
Moderately Well Defined Channel	0.025	-----	0.060
Irregular Channel	0.035	-----	0.100
Unlined Vegetated Channels			
Mowed Grass, Clay Soil	0.025	0.030	0.035
Mowed Grass, Sandy Soil	0.025	0.030	0.035
Unlined Unvegetated Channels			
Clean Gravel Section	0.022	0.025	0.030
Shale	0.025	0.030	0.035
Smooth Rock	0.025	0.030	0.035
Lined Channels			
Smooth Finished Concrete	0.013	0.015	0.020
Riprap (Rubble)	0.30	0.40	0.50

I. Water surface elevations and flow velocities in channels are impacted by the maintenance condition in the channel. Calculations shall be performed assuming maintained and unmaintained vegetative conditions. Lower (maintained) Manning's values shall be used to determine maximum velocities, while higher (unmaintained) Manning's values shall be used to determine water surface elevations per Figure 5.

J. Any channel modification must meet the applicable requirements of all Local, State and Federal Regulatory Agencies.

K. An erosion hazard setback shall be included within the Drainage Easement for the channel. The purpose of this setback is to reduce the potential for any damage to a private lot or street right-of-way caused by the erosion of the bank. The erosion hazard setback shall be determined as follows, and is provided in Figure 6:

1. For stream banks composed of material other than rock, locate the toe of the natural stream bank. Project a 4:1 line sloping away from the bank until it intersects finished grade. From this intersection add 15' away from the bank. This shall be the limit of the erosion hazard setback.

2. Figure 6 is intended to illustrate various scenarios under which the erosion hazard setback can be applied and how it interacts with the floodplain access easement. Scenario 1 shows a situation where the setback may be located outside the 100-year floodplain and access easement boundaries. Scenarios 2 and 3 show locations where the erosion hazard setback will be located inside the 100-year floodplain and access easement boundaries.

L. Any modifications within the area designated as erosion hazard setback, will require a geotechnical and geomorphological stability analysis, and a grading permit (two separate items).

Figure 6 Natural Open Channels

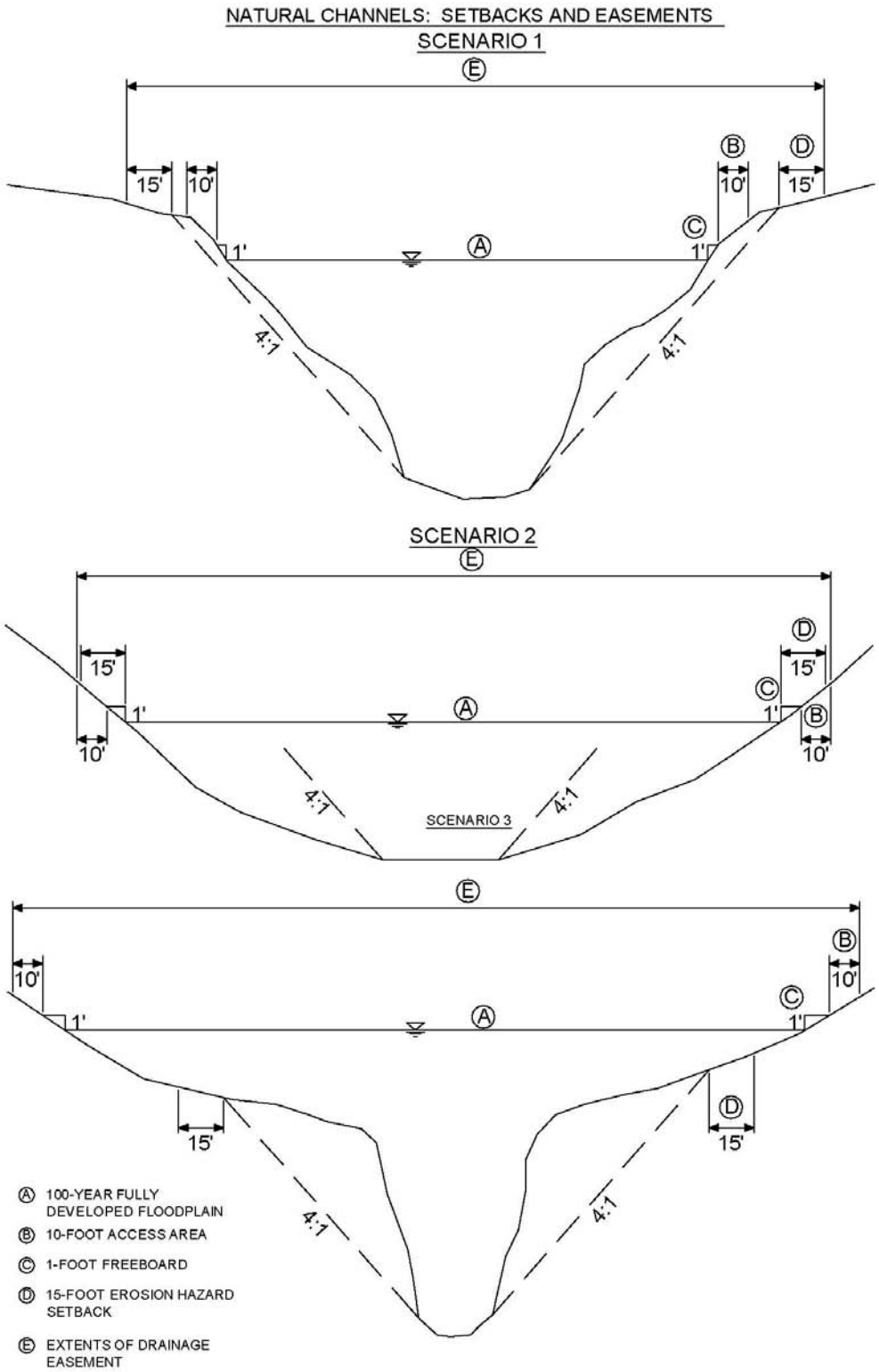

4.12 Hydraulic Design of Culverts

A. All culverts, headwalls, wingwalls, and aprons shall be designed in conformance with the City Standard Details. The Engineer is responsible for selecting the applicable detail.

B. Culvert calculations shall be provided to the City for review. Calculations may include, but are not limited to, headwall, tailwater, and flowline elevations, lowest adjacent grade and structure elevations, inlet and outlet control calculations and velocity calculations.

C. There is no minimum freeboard requirement for culvert crossings; however, an emergency overflow path shall be identified and provided on the construction plans. An emergency overflow path is the path the storm water will take when the drainage facilities becomes clogged or does not function in the manner as to which it was designed. The emergency overflow path shall be limited to public right-of-way or drainage easements.

D. Culverts should always be aligned to follow the natural stream channel. The engineer is shall provide sufficient information to analyze the upstream and downstream impacts of the culvert and illustrate the interaction of the channel and culvert alignment.

E. Headwalls and Entrance Conditions:

1. The Engineer shall be responsible for the headwall and wingwall designs. Headwalls and endwalls refer to the entrances and exits of structures, respectively, and are usually formed of cast-in-place concrete and located at either end of the drainage system. Wingwalls are vertical walls, which project out from the sides of a headwall or endwall.

2. The culvert entrance losses are provided in Table 4.7. The values of the entrance coefficient Ke represent a combination of the effects of entrance and approach conditions. Losses shall be completed using the following formula:

$$He = Ke\left[\frac{V^2}{2g}\right]$$

He	=	Entrance head loss (ft)
Ke	=	Entrance loss coefficient
v	=	Velocity (fps)
g	=	Gravity constant (32.2 ft/s^2)

F. Concrete culvert headwalls and wingwalls shall use form-liner surface finish unless otherwise approved by Director of Engineering.

Table 4.7 Culvert Entrance Losses

Type of Structure	K_e
Pipe, Concrete	
-projecting from fill, socket and (groove end)	0.2
-projecting from fill, square cut end	0.5
-headwall or headwall and wingwalls: socket end of pipe (groove end)	0.2
-headwall or headwall and wingwalls: square edge	0.5
-headwall or headwall and wingwalls: rounded (radius = 0.0933D)	0.2
-mitered to conform to fill slope	0.7
-beveled edges, 33.7° or 45°	0.2
-side or sloped tapered inlet	0.2
Pipe, or Pipe-Arch	
-projecting from fill (no headwall)	0.9
-headwall or headwall and wingwalls: square edge	0.5
-mitered to conform to fill slope, paved / unpaved slope	0.7
-beveled edges, 33.7° or 45°	0.2
-side or sloped tapered inlet	0.2
Box, Reinforced Concrete	
-headwall parallel to embankment (no wingwalls): squared on three sides	0.5
-headwall parallel to embankment (no wingwalls): rounded on three sides to radius 1/12 barrel dimension on three sides	0.2
-wingwalls at 30° to 75° to barrel: square edged at crown	0.4
-wingwalls at 30° to 75° to barrel: crown edge rounded to radius of 2/12 barrel dimension, or beveled top edge.	0.2

4.13 Bridge Design Hydraulics

A. The City requires that head losses and depth of flow through bridges be determined with a HEC-RAS program or other approved program. The following guidelines pertain to the hydraulic design of bridges:

1. Fully developed 100 year water surface must not be increased upstream of the bridge.

2. Excavation of the natural channel is not allowed as compensation for loss of conveyance.

3. Channelization upstream or downstream of the proposed bridge will normally only be permitted when necessary to realign the flow to a more efficient angle of approach.

4. Side swales may be used to provide additional conveyance downstream of and through bridges.

5. Bridges are to be designed with the lowest point (low beam) low chord at least 2’ above the water surface elevation of the design storm.

B. A scour analysis shall be submitted with design plans.

4.14 Energy Dissipators

A. The Engineer shall be responsible for all energy dissipation designs.

B. A Downstream Assessment shall be performed to ensure modifications to the storm drainage system, through development or construction of storm drainage facilities, do not have an adverse impact on downstream conditions.

C. Grouted rock rip-rap or gabion baskets or mattresses are required for energy dissipation. Other designs may be considered.

D. All energy dissipation designs shall include supporting calculations showing the design is adequate. The City may require the Engineer to provide a hydraulic model as supporting documentation.

E. All energy dissipators should be designed to facilitate future maintenance. The design of outlet structures in or near parks or residential areas shall give special consideration to appearance and shall be approved by the Director of Engineering Services.

4.15 Floodplain Alterations

A. No new construction is allowed in floodplain areas, but construction is allowed in those areas that have been reclaimed from the floodplain.

B. Floodplain alteration shall be allowed only if all the following criteria are met:

1. Flood studies shall include flows generated for existing conditions and fully-developed conditions for the 2, 5, 10, 25, and 100 year storm events.

2. Alterations of the floodplain shall not increase the water surface elevation of the design flood of the creek on other properties.

3. Alterations shall be in compliance with FEMA guidelines.

4. Alterations of the floodplain shall meet the requirements of Section 4.03.

5. Alterations shall result in no loss of valley storage for a Major Creek, as defined by the Subdivision Ordinance, and a 15% maximum loss of valley storage for any other tributary for any reach, except at bridge and culvert crossings where it can be proven that there are no detrimental effects downstream.

6. Any alteration of floodplain areas shall not cause any additional expense in any current or projected public improvements, including maintenance.

7. The floodplain shall be altered only to the extent permitted by equal conveyance on both sides of the natural channel, as defined by the United States Army Corps of Engineers in a HEC-RAS analysis. The right of equal conveyance applies to all owners and uses, including greenbelt, park areas, and recreational areas. Owners may relinquish their right to equal conveyance by providing a written agreement to the Director of Engineering Services.

8. A grading permit shall be required to perform any grading activities on site.

9. The toe of any fill shall parallel the natural direction of the flow.

10. Grading activities in the floodplain shall incorporate and consider other City planning documents and ordinances such as the Tree Preservation Ordinance, the Major Creek Ordinance, the Floodplain Ordinance, and the 2004 Final Riparian and Wetland Assessment.

11. Incorporates and considers other city planning documents and ordinances.

C. The above criteria shall be met before any floodplain alteration may occur. Typical projects requiring a floodplain alteration include placing fill (whether or not it actually raises the property out of the floodplain) constructing a dam, straightening channel sections, making improvements, (substantial or otherwise), to existing structures in a floodplain in which the existing outside dimensions of the structure are increased, and temporary storage of fill materials, supplies and equipment.

D. In general, the information needed for the application shall be performing by running a backwater model, such as HEC-2 or HEC-RAS, and a flood routing model, such as TR-20, HEC-1, or HEC-HMS. Unless a pre-existing model is in place, HEC-HMS and HEC-RAS shall be used. The backwater information shall be used to determine that upstream water surface elevations and erosive velocities have not increased. Flood routing information shall be used to insure that the cumulative effects of the reduction in floodplain storage of floodwater will not cause downstream increases in water surface elevations and erosive velocities.

E. The Engineer is responsible for providing documentation of the relevant USACE approved permits prior to beginning modification to the floodplain, or for providing a signed and sealed statement detailing why such permits are unnecessary.

F. Verification of Floodplain Alterations:

1. Prior to final acceptance by the City for a certified statement shall be prepared by a Licensed Professional Engineer showing that all lot elevations, as developed within the subject project, meet the required minimum finished floor elevations shown on the construction plans. This certification shall be filed with the Director of Engineering Services.

2. In addition, at any time in the future when a building permit is desired for existing platted property which is subject to flooding or carries a specified or recorded minimum finished floor elevation, a Registered Professional Land Surveyor shall survey the property prior to obtaining a building permit. The certified survey data showing the property to be at or above the specified elevation shall be furnished to the Director of Engineering Services for approval. Certification of compliance with the provisions of this ordinance pertaining to specified finished floor elevations shall be required.

3. The owner/developer shall furnish, at his expense, to the Director of Engineering Services sufficient engineering information to confirm that the minimum finished floor elevations proposed are as required by this ordinance. Construction permits will not be issued until a Conditional Letter of Map Revision (CLOMR) or amendment has been accepted by the Director of Engineering Services for submittal to FEMA. Letters of Map Revision shall be submitted to the Director of Engineering Services for submittal to FEMA prior to final acceptance of the project. The contractor shall supply to the Director of Engineering Services all necessary documentation and fees to be forwarded to FEMA for application for a Letter of Map Amendment if the Letter of Map Revision has not yet become effective.

4. All submittals to FEMA shall be made through the Engineering Services Department. The owner/developer will provide the City with an additional copy of the CLOMR or LOMR

submittal as well as the required FEMA submittal and shipping fees. Upon City approval, receipt of the fees, and receipt of the FEMA review copy, the City will forward the submittal to FEMA.

5. All response to FEMA comments shall be submitted to the City prior to submittal to FEMA. The City will review the response to comments in a timely manner.

4.16 Erosion and Sedimentation Control

A. See Section 8 for requirements for Stormwater Best Management Practices and Stormwater Management Plan.

4.17 Drainage Easements

A. The following minimum width exclusive drainage easements are required when facilities are not located within public rights-of-way or easements:

   1. Storm sewers are to be located within the center of a 15' drainage easement or 1.5 times the depth plus the width of the structure rounded up to the nearest 5', whichever is greater.

   2. Overflow flumes are to be located with the edge being a minimum of 1' off the property line within a 10' drainage easement.

B. Storm drain lines are considered public if they cross property lines and collect runoff from adjacent properties. Drainage easements shall be dedicated to the City when a drainage system crosses a property line. For single-family residential developments, storm drain lines shall not cross residential lots unless approved by the Director of Engineering Services.

C. Drainage Easements shall be dedicated for all floodplains and shall include an erosion hazard setback to reduce the potential for damage due to erosion of the bank.

D. Drainage Easements shall be dedicated for all detention facilities.

4.18 Sustainable Development

The City encourages developments to implement sustainable designs, concepts, and practices on site. The Engineer shall notify the City of the design intent and provide the necessary information, data, and calculations on the construction plans. The following items are potential concepts and designs that may be considered in a sustainable design. Concepts and designs not included on this list may be proposed by the Engineer.

- Rainwater Harvesting
- Green Roofs
- Modular Porous Paver Systems
- Porous Concrete
- Extended Detention
- Bio Retention

- Reduction of impervious surfaces
- Preservation of natural drainage paths

The Engineer shall refer to published technical resources on the design of these sustainable designs, concepts, and practices. Such technical resources may be found on the North Central Texas Council of Governments' (NCTCOG) storm water website or the Environmental Protection Agency's (EPA) website for Low Impact Development.

Detention/Retention Pond Example

EXAMPLE

GIVEN: A 10 acre site is currently undeveloped and will be developed as a non-residential use. The entire site is the drainage area for the proposed detention basin.

DETERMINE: Maximum release rate and required detention storage.

SOLUTION:

1.) Determine 100-year peak runoff rate for single family runoff (Q=C*I*A). This is the maximum release rate from the site after development. (Any area within the drainage area not being conveyed to the detention basin shall be accounted for in the calculation for the maximum release rate.)

Existing Conditions:	C	=	0.3
	T_c	=	20 minutes
	I_{100}	=	6.88” / hour
	A	=	10 acres
	Q_{100}	=	(0.3)(6.88)10=20.64 cfs

2.) Determine inflow Hydrograph for storms of various durations in order to determine maximum volume required with maximum release rate calculated in step 1. (Incrementally increase durations by 10 minutes until the duration of peak inflow is less than the maximum release rate or where the required storage is less than the storage for the prior duration. The prior duration storage shall be used for the required detention storage.)

Proposed Conditions:	C	=	0.90
	Tc	=	10 minutes
	I_{100}	=	8.74” / hour
	A	=	10 acres
	Q_{100}	=	(0.90)(8.74)10 = 78.66 cfs

Check various duration storms:

10 minutes	I=8.74;	Q=0.9(8.74)10	=	78.66	cfs
20 minutes	I=6.88;	Q=0.9(6.88)10	=	61.96	cfs
30 minutes	I=5.74;	Q=0.9(5.74)10	=	51.65	cfs
40 minutes	I=4.95;	Q=0.9(4.95)10	=	45.59	cfs
50 minutes	I=4.38;	Q=0.9(4.38)10	=	39.41	cfs
60 minutes	I=3.94;	Q=0.9(3.94)10	=	35.43	cfs
70 minutes	I=3.59;	Q=0.9(3.59)10	=	32.27	cfs
80 minutes	I=3.30;	Q=0.9(3.30)10	=	29.68	cfs
90 minutes	I=3.06;	Q=0.9(3.06)10	=	27.53	cfs

Maximum Detention Storage Volume is determined by deducting the volume of runoff released during the time of inflow from the total inflow for each storm duration:

10 minute storm

INFLOW	=	10(78.66)60 sec/min	=	47,196	cf
OUTFLOW	=	(0.5)20(20.64)60 sec/min	=	12,392	cf

STORAGE	=	INFLOW - OUTFLOW	=	34,804	cf

20 minute storm

INFLOW	=	20(61.96)60 sec/min	=	74,354	cf
OUTFLOW	=	(0.5)30(20.64)60 sec/min	=	18,588	cf
STORAGE	=	INFLOW - OUTFLOW	=	55,765	cf

30 minute storm

INFLOW	=	30(51.65)60 sec/min	=	92,975	cf
OUTFLOW	=	(0.5)40(20.64)60 sec/min	=	24,785	cf
STORAGE	=	INFLOW - OUTFLOW	=	68,190	cf

40 minute storm

INFLOW	=	40(44.59)60 sec/min	=	107,006	cf
OUTFLOW	=	(0.5)50(20.64)60 sec/min	=	30,981	cf
STORAGE	=	INFLOW - OUTFLOW	=	76,026	cf

50 minute storm

INFLOW	=	50(39.41)60 sec/min	=	118,219	cf
OUTFLOW	=	(0.5)60(20.64)60 sec/min	=	37,177	cf
STORAGE	=	INFLOW - OUTFLOW	=	81,042	cf

60 minute storm

INFLOW	=	60(35.43)60 sec/min	=	127,541	cf
OUTFLOW	=	(0.5)70(20.64)60 sec/min	=	43,373	cf
STORAGE	=	INFLOW - OUTFLOW	=	84,168	cf

70 minute storm

INFLOW	=	70(32.27)60 sec/min	=	135,516	cf
OUTFLOW	=	(0.5)80(20.64)60 sec/min	=	49,569	cf
STORAGE	=	INFLOW - OUTFLOW	=	85,947	cf

80 minute storm

INFLOW	=	80(29.68)60 sec/min	=	142,485	cf
OUTFLOW	=	(0.5)90(20.64)60 sec/min	=	55,765	cf
STORAGE	=	INFLOW - OUTFLOW	=	86,720	cf

90 minute storm

INFLOW	=	90(27.53)60 sec/min	=	148,679	cf
OUTFLOW	=	(0.5)100 (20.64)60 sec/min	=	61,961	cf
STORAGE	=	INFLOW - OUTFLOW	=	86,717	cf

Required detention storage is 86,720 cf at the 80 minute storm duration.

SECTION 5 – WATER & WASTEWATER DESIGN REQUIREMENTS

Section 5 – Water & Wastewater Design Requirements

5.1 Water System - General

A. The intent of the water system design requirements is to list minimum requirements for public water distribution and transmission system facilities and appurtenances. Private fire service mains shall also be designed according to these water system design requirements and the City's Fire Code and the National Fire Protection Association (NFPA) 24, Standard for the Installation of Private Fire Service Mains and Appurtenances, latest revision.

B. Design criteria for all water systems shall comply with Texas Commission on Environmental Quality (TCEQ) Chapter 290, Subchapter D (Rules and Regulations for Public Water Systems), latest revision. Chapter 290 is included in Part I of Title 30 of the Texas Administrative Code.

C. Line sizes shall comply with the Water Distribution System Capital Improvement Plan.

D. Water mains shall be sized and extended through the limits of a development to serve adjacent properties.

E. Dead end water mains are not allowed unless approved in writing by the Director of Engineering Services; however, if approved, an automatic flushing device shall be provided (See 5.1.12). Automatic flushing devices shall drain via a pipe system to the storm sewer system.

5.1.1 Water Main Location

A. Water mains 12" and smaller shall be installed 2' from the back of the curb, as measured to the centerline of pipe.

B. Water mains larger than 12" shall be installed at least 3' from the back of curb as measured to the centerline of pipe.

C. Water mains shall be designed to minimize bends and fittings and follow right-of-way or centerline alignment curves at a uniform distance from the right-of-way or centerline.

D. Dead end water mains shall extend a minimum of 5' beyond the edge of the pavement. If adjacent to a fitting, extend a minimum of 20' or one pipe joint beyond fitting.

5.1.2 Horizontal and Vertical Alignment

A. A clearance of 18" shall be maintained when crossing storm drain systems. Where minimum clearance cannot be achieved, water mains shall be encased in 6" of concrete in accordance with the standard detail.

B. Lines 16" and smaller shall have a minimum cover of 4'.

C. Lines larger than 16" shall have a minimum cover of 6'.

D. Waters mains shall be designed as straight as possible following the existing or proposed grade at the minimum depth of cover. Bends shall be provided where vertical slope changes exceed 80% of the manufacturer's recommended joint deflection.

E. Excessive high points that trap air and restrict water flow shall be avoided.

5.1.3 Separation Distance between Water and Wastewater

A. The separation distance between water mains and wastewater mains, manholes or other appurtenances is governed by Title 30 of the Texas Administrative Code, Part 1, Chapter 290, Subchapter D, Rule 290.44(e)and Chapter 217, Subchapter C, Rule 217.53(d).

B. Water mains shall have a minimum separation distance of 9' in all directions from wastewater collection facilities. Separation distances shall be measured from the outside surface of each of the respective facilities.

C. If the minimum separation distances cannot be achieved for parallel water and wastewater mains, the separation distances may be reduced if the wastewater main has a pressure rating of 150 psi. In these cases, the water main shall be placed above the wastewater main with minimum separation distances of 4' horizontally and 2' vertically.

D. If the minimum separation distances cannot be achieved for crossing water and wastewater mains, the separation distances may be reduced under two scenarios:

1. The wastewater main has a minimum pressure rating of 150 psi.

2. The water or wastewater main is cased for a minimum of 18' with a casing pipe having a minimum pressure rating of 150 psi.

Under each scenario, the water main shall be centered on the wastewater main crossing with a minimum separation distance of 12".

E. When water mains are designed to be closer than 9' to wastewater manholes or cleanouts, the water main shall be cased as described in section 5.1.3D above.

5.1.4 Average Daily Water Demands

Apart from project specific water demand and/or actual flow measurements, the following values shall be used when calculating the average daily water demands:

Table 5.1 – Average Daily Water Demands

Land Use	Design	Calculation
Apartment	• 3.0 persons/unit • 230 gallons per person per day	690 gpd/unit
Residential/ Town Home/ Patio Home	• 3.5 persons/unit • 230 gallons per person per day	805 gpd/unit
Hospital (Beds)	• 720 gallons per day per bed	720 gpd/bed
Nursing Home or Other Institution (Beds)	• 240 gallons per day per bed	240 gpd/bed
Commercial/ Industrial/Office	• 1 person per parking space, or • 1 person per 400 SF of building	50 gpd/person
School	• 30 gallons per student/day	30 gpd/student

5.1.5 Water Main Sizing

A. Water mains shall be sized in accordance with the Water Distribution System Master Plan.

B. The following criteria shall be used to size water mains.

1. Average daily water demands less than 80,000 gallons per day:

   a. Single Family Residential

      i. Water mains shall be a minimum of 8”.

      ii. 12” water mains are required to serve the development and shall be located along collector streets.

   b. Multi-Family Residential

      i. Water mains shall be a minimum of 8” and shall be extended to provide service to adjacent properties.

      ii. Water mains greater than 600’ in length or supplying more than one fire hydrant/fire service line shall be 12”.

   c. Commercial, Schools and Manufacturing

      i. Looped 8” water mains may be used for fire hydrants located in parking lots and not adjacent to buildings.

      ii. Water mains greater than 1,000’ in length or supplying more than two fire hydrants/fire service lines shall be a minimum of 12”.

2. Average daily water demands greater than 80,000 gallons per day shall submit the following information:

   a. Zoning

   b. Area in acres

   c. Type of Development

   d. Number of units and/or building square footage

   e. Exhibit with connection locations and proposed water main schematic

   f. Projected Average Daily Water Demands

5.1.6 Water Main Materials

A. Polyvinyl Chloride (PVC) Pipe

1. PVC water mains from 4” to 8” in diameter shall be AWWA C900 DR14.

2. PVC water mains 12” in diameter shall be AWWA C900 DR18.

3. PVC water mains 16” in diameter and greater shall be AWWA C905 DR18.

B. Ductile Iron Pipe

Ductile iron water mains 16” in diameter and larger shall be in accordance with ANSI/AWWA C151/A21.50 with a minimum pressure class of 150 psi. It shall be the Engineer’s responsibility to determine whether a higher pressure class is required.

C. Fittings

All fittings shall be ductile iron and have mechanical restraints and thrust blocking.

5.1.7 Water Services

Minimum requirements for water services are as follows:

A. Minimum 1” meter and 1” services are required for all residential and commercial services. The size necessary shall be selected based on design calculations of actual demands.

B. Twin meters in parallel are not permitted as meter size shall correlate to the line size. Bullhead connections are not permitted.

C. Meters 3” and larger are required to be in a concrete vault.

D. Domestic or irrigation service connections shall not be allowed on a fire hydrant lead or fire service line.

E. A domestic or irrigation service connection shall not exceed 50’ in length.

F. A fire service line shall be a minimum of 8”.

G. The water meter size shall be the same size as the service line.

H. For a water service requiring a vault, a minimum 6” water line shall be required off the water main with a minimum 6” gate valve prior to reducing in size.

I. Meter boxes shall be placed within the right-of-way or in a dedicated water easement.

J. Meter boxes shall be protected from vehicular traffic with bollards. If not protected by bollards, either a traffic-rated vault or curb is required.

K. Meters shall be placed generally in the center of residential lots according to the Standard Details.

L. Refer to Approved Material List for acceptable products.

5.1.8 Valves

A. Isolation Valves

1. Isolation valves shall be placed on or near street property lines.

2. Isolation valves shall not be over 600’ apart in residential and multi-family areas.

3. Isolation valves shall not be over 500' apart in all other non-residential areas on lines 12" and smaller. For lines 16" and larger, valves shall not be over 1000' apart.

4. Two isolation valves shall be placed such that only one fire hydrant/fire fighting apparatus and one fire sprinkler private service system is shut down at a time. No more than three isolations valves shall be used to shut down the combined fire hydrant/fire fighting apparatus and fire sprinkler system private service main.

5. Water mains supplying an automatic fire sprinkler system shall include isolation valves on the private fire service main.

6. Isolation valves shall not be located in parking spaces.

7. In undeveloped areas, main line isolation valves shall be spaced every 1,200' and adjacent to fire hydrants.

B. Air Release Valves

1. The Engineer shall be responsible for locating and sizing air release valves in accordance with AWWA Manual M51: Air-Release, Air/Vacuum & Combination Air Valve.

2. Air release valves shall be installed on water mains larger than 12". Vent pipes shall discharge air above grade and above 100-year floodplain elevation if applicable.

3. Air valves are not required on water distribution mains smaller than 12" where fire hydrants and service connections provide a means for venting trapped air.

4. Air valve manholes shall not be located in parking spaces.

C. Blowoff Valves

1. Blowoff valves shall be provided on water mains 16" and larger, at low points and at isolation valves where the water main slopes toward the valve.

2. Blowoff valves shall discharge to a drainage channel, creek, storm sewer or culvert.

5.1.9 Fire Hydrants

Fire hydrants shall be provided as recommended by the "GUIDE FOR DETERMINATION OF REQUIRED FIRE FLOW" published by the Insurance Service Office. The following minimum guidelines shall be met:

A. Fire hydrants shall be installed at a minimum of 10' from the curb return on Thoroughfare Types A, B, and C.

B. Fire hydrants shall be installed at a minimum of 2' and a maximum of 6' from the edge of pavement on Thoroughfare Types D, E, and F and fire lanes.

C. Fire hydrants shall be located at all main entrances and intersecting streets and fire lanes.

D. Fire hydrants shall be spaced every 1200' along undeveloped roadways.

E. Fire hydrant leads exceeding 100' shall be looped with a minimum 8" line.

F. Fire hydrants shall be provided every 500' within residential developments as measured along the route that a fire hose is laid by a fire apparatus.

G. The fire hydrant shall not be located in the sidewalk.

H. Fire hydrant valves shall be positioned to one side of the fire hydrant pumper nozzle.

I. Fire hydrants required to supplement water supply for automatic fire protection systems shall be located within 100' of the Fire Department connection for such system.

J. Additional requirements for fire hydrant installation adjacent to, and along fire lanes is as follows:

1. Multi-family

a. Fire hydrants shall be located every 300' as measured along the route that a fire hose is laid by a fire apparatus.

b. Fire hydrants shall be located outside the radius of the fire lane and at least 35' from all buildings.

c. A minimum of two fire hydrants shall be located within 500' of the front of any building as measured along the route that a fire hose is laid by a fire apparatus.

2. Commercial

a. Fire hydrants shall be located within 150' of the main entrance.

b. Fire hydrants shall be located outside the radius of the fire lane and at least 35' from all buildings.

c. A minimum of two fire hydrants shall be located within 300' from the front of any building as measured along the route that a fire hose is laid by a fire apparatus.

K. 6 inch water mains shall be installed such that not more than one hydrant will be between intersecting lines.

L. 8" water mains shall be installed such that not more than two fire hydrants will be between intersecting lines.

M. Fire hydrants on private property shall be located within easements and protected by curb stops or bollards, the maintenance of which shall be the responsibility of the property owner. The property owner is responsible for keeping the curb stops or bollards in place.

N. Fire hydrants on private property shall be accessible to the Fire Department at all times.

O. Fire hydrants location is subject to approval of Fire Department.

5.1.10 Connections to Existing Water Mains

A. Connections to 12" water mains and larger shall be made with a pipe a minimum of one size smaller than the line being tapped.

B. The smallest pipe connection to water mains 20" and larger is 6".

5.1.11 Backflow Prevention

Backflow prevention devices shall be required at the following locations in order to protect the public water system from cross contamination:

A. Commercial property water service lines

B. Dedicated irrigation lines

C. Private fire service main supplying fire sprinkler systems

D. Multi-family residential water service lines

5.1.12 Automatic Flushing Valve

A. Automatic Flush Valves shall be placed on dead-end water mains. Water mains anticipated to be extended in the future may be required to install an automatic flush valve, depending on the timing of future work and the specific location.

B. Automatic Flush Valves shall drain via pipe to storm drain system.

C. Refer to Standard Detail for typical installation and Approved Material List for acceptable products.

5.2 Wastewater System - General

A. Design criteria for all wastewater systems shall comply with TCEQ Chapter 217 (Design Criteria for Domestic Wastewater Systems), latest revision. Chapter 217 is included in Part 1 of Title 30 of the Texas Administrative Code.

B. Wastewater main sizes shall comply with the Wastewater System Capital Improvement Plan.

C. Wastewater mains shall be sized and extended through the limits of a development to serve adjacent properties.

5.2.1 Wastewater Main Location

A. Wastewater mains serving subdivisions and commercial developments shall be located under street paving along the center of the street.

B. Wastewater mains shall not be located in alleys.

C. Wastewater mains located near open waterways shall follow the alignment of the waterway along the high bank and be located a minimum of 15' beyond the top of bank. Wastewater manholes shall not be located in the flow line of an existing waterway.

D. No wastewater main shall be located inside the storm sewer system.

5.2.2 Horizontal and Vertical Alignment

A. Wastewater mains shall be designed as straight as possible between manholes.

B. Wastewater mains running parallel with public right-of-ways shall match change in street direction. When streets have horizontal curvature, curved sewers are acceptable to maintain parallel alignment.

C. Minimum cover for wastewater main shall be 4'.

D. In general, the minimum depth for a wastewater main to serve a given residential property with a 4" lateral shall be 3' plus 2% times the length of the house lateral (the distance from the wastewater main to the center of the house). Thus, for a house 135' from the wastewater main, the depth would be 3' plus 2% x 135' = 3.0 + 2.7 = 5.7'. The depth of the flow line of the wastewater main should then be at least 5.7' below the elevation of the ground at the point where the service enters the house. Profiles of the ground line 20' past the building line will be required to verify that this criteria is met.

E. No vertical bends or vertical curves shall be allowed between manholes.

F. A parallel wastewater main shall be required for wastewater lateral connections on wastewater mains deeper than 12'.

G. Wastewater mains shall be placed on such a grade that the velocity is not less than 2 fps or more than 10 fps at design peak flow. The following table of values may be used:

Table 5.3: Minimum and Maximum Grades for Wastewater Mains*

Size of Pipe (inches)	Minimum Slope in (Percent)	Maximum Slope in (Percent)
8	0.33	8.40
10	0.25	6.23
12	0.20	4.88
15	0.15	3.62
18	0.11	2.83
21	0.09	2.30
24	0.08	1.93
27	0.06	1.65
30	0.055	1.43
33	0.05	1.26
36	0.045	1.12
39	0.04	1.01
>39	**	**

*The slopes were calculated using Manning's Equation and a roughness coefficient of 0.013.
**For lines larger than 39" in diameter, the slope shall be determined using the following equation.

$$V = \left(\frac{1.486}{n}\right) * \left(R^{2/3}\right) * \left(S^{1/2}\right)$$

where:

V	=	velocity of flow in wastewater main (fps)
n	=	roughness coefficient of the wastewater main
R	=	hydraulic radius of the wastewater main (ft), which is equal to the area of the flow divided by the wetted perimeter (R=A/P)
S	=	Slope of the hydraulic gradient (ft/ft)

5.2.3 Separation Distance between Wastewater and Water Mains

A. The separation distance between wastewater and water mains or other appurtenances is governed by Title 30 of the Texas Administrative Code, Part 1, Chapter 217, Subchapter C, Rule 217.53(d).

B. Wastewater mains shall be installed in trenches separate from water mains.

C. Wastewater mains shall have a minimum separation distance of 9' in all directions from water mains. All separation distances shall be measured from the outside surface of each of the respective facilities.

D. If the minimum separation distances cannot be achieved for crossing water and wastewater mains, the separation distances may be reduced under two scenarios:

1. The wastewater main has a minimum pressure rating of 150 psi.

2. The water or wastewater main is cased for a minimum of 18' with a casing pipe having a minimum pressure rating of 150 psi.

Under each scenario, the water main shall be centered on the wastewater main crossing with a minimum separation distance of 12".

E. If the minimum separation distances cannot be achieved for crossing wastewater and water mains, the separation distances may be reduced if the wastewater main has a pressure rating of 150 psi. In these cases the wastewater main shall be cased for a minimum of 18'. The casing pipe shall be centered on the water main crossing, be a minimum of two nominal pipe sizes larger than the wastewater main and be sealed at each end with watertight non-shrink cement grout, or a manufactured watertight seal. The minimum separation distance is 6".

5.2.4 Wastewater Flows

If project specific wastewater flow projections or actual flow measurements are not available for a development, the criteria in Table 5.4 shall be used to calculate average daily and peak wastewater flows. This criteria meets or exceeds the minimum requirements as set by TCEQ in Title 30 of the Texas Administrative Code, Part 1, Chapter 217, Subchapter C, Rule 217.32(a)(3).

Table 5.4 – Wastewater Flow Projections

Land Use	Design Factors	Average Daily Wastewater Flows	Peak Wastewater Flows*
Apartment	• 3.0 persons/unit • 102 gallons per person per day	306 gpd/unit	1,224 gpd/unit
Residential/ Town Home/ Patio Home	• 3.5 persons/unit • 102 gallons per person per day	357 gpd/unit	1,428 gpd/unit
Hospital (Beds)	• 200 gallons per bed per day	200 gpd/bed	800 gpd/bed
Nursing Home or Other Institution (Beds)	• 100 gallons per day per bed	100 gpd/bed	400 gpd/bed
Commercial/ Industrial/Office	• 1 person per parking space, or • 1 person per 400 s.f. of building • 20 gallons per day/person	20 gpd/person	80 gpd/person
School	• 20 gallons per student/day	20 gpd/student	80 gpd/student

* Peak flow is based on a peaking factor of 4.0.

5.2.5 Wastewater Main Sizing

A. Although the Wastewater System Master Plan may be used as a guide for sizing wastewater mains, sizing should be based on an engineering analysis of initial and future flow of the total drainage area to be served.

B. Wastewater mains shall be sized to carry the ultimate peak flow at 100% of the full flow capacity of the pipe. A peaking factor less than 4 may be considered for wastewater mains with diameters 24" and larger.

C. Pipe capacity shall be calculated using Manning's equation. A roughness coefficient of 0.013 shall be used.

5.2.6 Wastewater Main Materials

A. Polyvinyl Chloride (PVC) Wastewater Pipe

1. PVC non-pressure rated gravity wastewater mains from 6" to 15" in diameter shall be SDR 35 (if less than 15' deep) or SDR 26 (if 15' or deeper) (ASTM D3034) .

2. PVC non-pressure rated gravity wastewater mains 18" in diameter and greater shall have a minimum pipe stiffness of 46 psi or 115 psi and be manufactured in accordance with ASTM F679 (solid wall).

3. PVC pressure rated gravity wastewater mains and force mains from 6" to 12" in diameter shall be SDR 26 (ASTM D2241) with a minimum pressure rating of 160 psi.

4. PVC pressure rated gravity wastewater mains and force mains greater than 12" in diameter shall be AWWA C905 DR25 with a minimum pressure rating of 165 psi.

5. PVC profile wall pipe will not be allowed.

B. Fiberglass (Glass-Fiber-Reinforced Thermosetting Resin) Pipe

1. Fiberglass non-pressure rated gravity wastewater mains 18" in diameter and greater shall be in accordance with ASTM D3262 with a minimum pipe stiffness of 46 psi and Class "B-2" embedment in accordance with NCTCOG Item 504.5 and Standard Drawing 3020.

2. Fiberglass pressure rated gravity wastewater mains and force mains 18" in diameter and greater shall be in accordance with ASTM D3754 with a minimum pressure rating of 150 psi and Class "B+" embedment in accordance with NCTCOG Item 504.5 and Standard Drawing 3020.

C. Vitrified clay pipe will not be allowed.

5.2.7 Wastewater Service Laterals

The sizes and locations of laterals shall be designated as follows:

A. Wastewater service laterals for single-family residential shall be a minimum of 4" in diameter. Laterals shall be installed 10' downstream from the center of the lot and have a minimum separation distance of 10' separation from the water service.

B. Wastewater service laterals for multiple units, apartments, local retail and commercial developments shall be a minimum of 6" in diameter.

C. Wastewater service laterals for manufacturing and industrial shall be a minimum of 8".

D. Manholes are required on 6" and larger wastewater service laterals where they connect to the main line.

E. Wastewater service laterals shall not be attached to wastewater mains that are deeper than 12'. Deep cut or drop connections are not be permitted.

F. Each building shall have only one wastewater service lateral, except duplexes which shall have two wastewater service laterals independently attached to the main.

G. All mains installed for future developable areas shall include wastewater service laterals; the use of boots will not be permitted.

H. All wastewater service laterals crossing water mains shall conform to the requirements of the TCEQ Chapter 217, Subchapter C, Rule 217.53(d), latest revision, or Section 5.2.3 of this standard.

5.2.8 Manholes and Cleanouts

A. Manholes shall be installed at all changes in grade and direction, and have a maximum spacing of 500'.

B. Spacing between a manhole and an upstream cleanout shall be a maximum of 250'. A cleanout or manhole shall be located at the end of a wastewater main.

C. Manholes on curved wastewater mains shall be located at the P.C. or P.T. of the curve and have a maximum spacing of 300' along the curve.

D. Manholes shall be constructed of monolithic, cast-in-place concrete, precast concrete or fiberglass.

E. Manholes shall be concentric type unless otherwise approved by the Director of Engineering Services.

F. Drop manholes shall be required when the inlet pipe flow line elevation is more than 24" above the outlet pipe flow line elevation. Drops shall be outside the manhole unless otherwise approved by the Director of Engineering Services.

G. Manholes shall be sized as follows:

1. 4' in diameter for 8", 10", and 12" pipe.
2. 5' in diameter for 15", 18", 21", 24" and 27" pipe.
3. 6' in diameter for 30" and 36" pipe.
4. 5' in diameter minimum for manholes deeper than 15'.

H. Where more than three manholes in sequence are to be bolted and sealed, every third manhole shall be vented 2' above the 100-year floodplain elevation or 10' above the adjacent ground line, whichever is higher. The Engineer shall provide the elevation of the 100-year floodplain on the profile.

I. <u>Construct manholes within 30' of each end of wastewater mains that are installed by other than open cut and within 30' of each end of aerial crossings.</u>

J. Manholes shall not be located in parking spaces.

K. A manhole with pipes of different sizes must have the tops of the pipes at the same elevation and flow channels in the invert sloped on an even slope from pipe to pipe.

5.2.9 Inverted Siphons

The use of an inverted siphon to avoid obstructions along the alignment of the wastewater main requires approval by the Director of Engineering Services. Should an inverted siphon be necessary the design shall include:

A. Two or more barrels (pipes).

B. A minimum pipe diameter of 6".

C. The necessary appurtenances for convenient flushing and maintenance.

D. One upstream and one downstream of a manhole for cleaning equipment, inspection and flushing.

E. The siphon must be sized with sufficient head to achieve velocity of at least 3 fps at initial and design flows.

F. The inlet and outlet shall divert the normal flow to one barrel.

G. The system shall be designed to allow any barrel to be taken out of service for cleaning.

H. The system shall be designed to minimize nuisance odors.

5.2.10 Wastewater Lift Stations

Subdivisions shall be laid out so that all wastewater mains will be gravity flow. The use of a wastewater lift station must be approved by the Director of Engineering Services and the Director of Public Works.

A. All wastewater lift stations shall be designed in accordance with TCEQ Chapter 217, Subchapter C.

B. The Engineer shall prepare an engineering design report for the wastewater lift station.

C. The lift station shall be connected to the City Supervisory Control and Data Acquisition (SCADA) system. The Owner shall pay all costs associated with the SCADA including all labor, equipment, materials, and programming of the City's computer and testing. The SCADA equipment installed shall conform to the City's standard specifications for Computerized Monitoring and Control Specifications for Wastewater Lift Stations.

D. Control panels shall have heaters and exhaust fans, CT for reading amperage, HOA switch, and an amp overload reset button on the outside of the panel.

E. All lift stations shall include a bioxide injection system for odor control.

F. The bioxide tank shall have a concrete foundation.

G. <u>If carbon filters are required, the housing shall be painted per the approval of the Director of Engineering Services.</u>

H. Lift stations with two or more wet wells shall include a sluice gate between each wet well.

I. Each pump shall have two guide rails.

J. Pumps shall be controlled by floats.

K. Pumps shall include hydraulic mixed flush valves.

L. For triplex pump stations, all three pumps are required to have swinging check valves, breakers, starters and floats for emergency situations.

M. All lift stations shall include a landscaping and irrigation plan that shall be approved by the City's landscape architect.

N. All lift stations shall include an 8' tall tubular steel fence with 16' slide gate.

O. A 2" blow off with an isolation valve and RPZ shall be installed next to the vault opposite the control panel.

5.2.11 Force Mains

A. Use white-colored pipe material whenever available.

B. 12" and smaller pipe shall be PVC ASTM D2241 SDR 26, or as determined by the Engineer.

C. Pipes larger than 12" shall be PVC AWWA C905 DR 18 or as determined by the Engineer and approved by the Director of Engineering Services.

D. Minimum size for force mains is 6".

E. Plug valves shall be installed every 1,000' of force main

5.2.12 Dumpster Enclosure Drains

A. Dumpster enclosures serving commercial sites that will need to have the enclosure washed out shall provide a connection to the sanitary sewer system.

B. Connection shall provide a water-tight sealed cover that can be removed to drain enclosure during periodic cleaning.

C. Dumpster enclosure shall be constructed to prevent parking lot stormwater runoff from entering enclosure area.

5.3 Reclaimed Water System - General

A. Design criteria for all reclaimed water systems shall comply with TCEQ Chapter 210 (Use of Reclaimed Water), latest revision. Chapter 210 is included in Part I of Title 30 of the Texas Administrative Code.

B. Line sizes shall comply with the Reclaimed Water Distribution System Master Plan.

C. Reclaimed water mains shall be sized and extended through the limits of a development to serve adjacent properties.

5.3.1. Reclaimed Water Main Location

A. Reclaimed water mains shall be located behind the curb outside of street paving.

B. Reclaimed water mains crossing under storm sewers shall follow the same criteria as water mains in Section 5.1.2A.

5.3.2. Horizontal and Vertical Alignment

A. The horizontal and vertical alignment for the reclaimed water system shall follow the same criteria as the water system in Section 5.1.2.

5.3.3. Separation Distance between Reclaimed Water and Other Systems

A. The separation distance for the reclaimed water and potable water main shall follow the same criteria as the water system in Section 5.1.3.

B. The minimum horizontal separation distance between reclaimed water and wastewater mains shall be 3' outside to outside, with the reclaimed water main located at or above the wastewater main.

C. Reclaimed water mains that parallel wastewater mains may be placed in the same benched trench.

D. Reclaimed water mains crossing wastewater mains shall follow the same criteria as water mains in Section 5.1.3.

5.3.4. Reclaimed Water System Materials

A. Reclaimed water mains shall utilize the same pipe materials as water mains per Section 5.1.6.

B. All reclaimed water main pipe shall be manufactured in purple or encased in purple polyethylene tubing.

5.4 Easements

A. In single-family residential developments, water, wastewater, and reclaimed water mains shall not cross residential lots unless specifically approved by the Director of Engineering Services, in which case the easement shall be located within a single lot and be a minimum of 15' in width.

B. Water mains 24" and larger shall be located in an easement parallel and adjacent to the right-of-way.

C. All easements required by the City shall be dedicated by plat if within the platted boundary. If outside the platted boundary, provide easement by separate instrument.

D. Site paving, such as, parking, fire lanes and access drives are allowed over utility easements with an easement use agreement. <LINK>

E. The following minimum width exclusive utility easements are required when facilities are not located within public rights-of-way:

   1. Water mains 12" and smaller are to be located within the center of a minimum 15' utility easement.

   2. Easement widths for water mains 16" and larger shall be a minimum of 20' subject to the approval of the Director of Engineering Services.

   3. Wastewater mains with a depth up to 10' are to be located in the center of a 15' utility easement.

   4. Wastewater mains with a depth between 10' and 20' are to be located in the center of a 20' utility easement.

   5. Wastewater mains with a depth greater than 20' are to be located in the center of a 30' utility easement.

F. Fire hydrants and automatic flushing valve located outside of public rights-of-way shall be located within a 10' x 10' utility easement.

G. 2" and smaller meters serving multi-family residential and non-residential developments shall be located within the right-of-way or in a minimum 5' x 5' utility easement or in the right-of-way.

H. 3" and larger meters shall be located within a minimum 10' x 10' utility easement outside the right-of-way.

I. All water main appurtenances such as air release valves with vents must be contained within utility easements with a minimum 3' clearance from the edge of the easement.

5.5 Thrust Restraint

A. All pressurized water and wastewater mains shall be restrained against thrust forces due to change in pipeline diameter or alignment in order to prevent joint separation or movement.

B. Thrust restraint shall be accomplished by concrete thrust blocks and restrained joints.

C. All valves, fittings and changes in elevation shall have concrete thrust blocks and restrained joints installed.

D. Thrust blocking shall be Class "PA" concrete per NCTCOG Item 702.2.4.3 and be able to withstand a minimum 200 psi test pressure with a minimum safety factor of 1.5 without exceeding the soil bearing capacity.

E. Restrained joints lengths shall be calculated to withstand a minimum 200 psi test pressure with a minimum factor of safety of 2.0.

F. The following technical references are available for calculating thrust restraint systems:

1. AWWA Manual M9: Concrete Pressure Pipe by AWWA, Latest Edition.

2. AWWA Manual M11: Steel Pipe – A Guide for Design and Installation by AWWA, Latest Edition.

3. AWWA Manual M23: PVC Pipe – Design and Installation by AWWA, Latest Edition.

4. Thrust Restraint for Ductile Iron Pipe by Ductile Iron Pipe Research Association (DIPRA), 2006, or Latest Edition.

5. Thrust Blocking, National Fire Protection Association Standard 24, Standard for the Installation of Private Fire Service Mains and Their Appurtenances, 2007 Edition

5.6 Pavement Cut and Repair

A. Water and wastewater and reclaimed water main improvements shall be designed to minimize the impact to existing pavement, where feasible.

B. No pavement shall be cut unless approved in writing by the Director of Engineering Services. Existing pavement cut, excavation and repair shall be in accordance with NCTCOG Item 402 and NCTCOG Standard Drawings 3070A through 3070D.

C. Full panel concrete pavement replacement will be required if pavement must be cut.

5.7 Trenchless Construction

A. Launching and receiving pits for trenchless construction shall be a minimum of 5' from the edge of pavement.

B. The location, size and depth of the launching and receiving pits for trenchless construction shall be evaluated during construction plan review.

C. Approved Methods

1. Horizontal Boring - Horizontal boring shall require a steel casing pipe with a minimum yield strength of 35,000 psi and minimum wall thickness of (1/4"). Actual wall thickness shall be designed based on a highway loading of HL-20, a maximum deflection of 5% and a minimum factor of safety of 2.0.

2. Pipe Jacking - Pipe shall be designed to withstand all jacking forces with a factor of safety of 2.0 during construction.

3. Tunneling

5.8 Crossings

A. Highway Crossings

1. The design of water and wastewater mains within a state highway must be in compliance with all applicable requirements of the Texas Department of Transportation (TXDOT), unless a variance is approved by TXDOT. The following reference applies: Title 43 of the Texas Administrative Code, Part 1, Chapter 21, Subchapter C – Utilities Accommodation

2. Water and wastewater mains shall be located so as to avoid or minimize the impact to future highway projects and improvements, to allow other utilities in the right-of-way, and to permit access to water and wastewater mains and other utility facilities for their maintenance with minimum interference to highway traffic

3. New water and wastewater mains crossing a highway shall be installed at approximately 90° to the centerline of the highway,

4. New water and wastewater mains located longitudinally along a highway shall be designed parallel to the right-of-way.

5. All water and wastewater crossings shall be encased with steel casing pipe in accordance with Section 5.7C(1) Horizontal Boring, or approved equal. Casing pipe shall be extended to the right-of-way line

6. Water valves, manholes and other appurtenances shall not be placed in the pavement or shoulder of highway.

7. Water main crossings shall include a valve on each side of the highway crossing.

8. Individual service meters shall be placed outside the limits of the right-of-way.

B. Railroad Crossings

1. The design of water and wastewater mains within railroad right-of-way must be in compliance with the requirements of the appropriate railroad authority. The designer should determine which railroad company right-of-way is being crossed and obtain their utility accommodation policies prior to beginning the design. The following references may be applicable:

   a. Utility Accommodation Policy by Burlington Northern Santa Fe (BNSF), Latest Edition.

   b. American Railway Engineering & Maintenance Association (AREMA), Latest Edition.

2. New water and wastewater mains crossing a railroad shall be installed at approximately 90° to the centerline of the railroad.

3. New water and wastewater mains located longitudinally along a railroad shall be designed parallel to the right-of-way. No main shall be located closer than 25’ from the centerline of the track.

4. All water and wastewater crossings shall be encased with steel casing pipe in accordance with Section 5.7C(1) Horizontal Boring, or approved equal. Casing pipe crossing railroad tracks shall be designed to withstand E80 railroad loadings and shall extend to the right-of-way lines.

5. Water valves, manholes, meters and other appurtenances shall be placed outside the limits of the right-of-way.

6. Water main crossings shall include a valve on each side of the railroad crossing.

C. Creek Crossings

1. All water and wastewater mains crossing under a flowing stream or semi-permanent body of water such as a marsh or pond shall be encased with concrete or steel casing pipe in accordance with Section 5.7C(1) Horizontal Boring, or approved equal.

2. Wastewater main crossings shall include a manhole on each side of the creek crossing beyond the top of creek bank.

3. Water main crossings shall include a valve beyond the top of creek bank on each side.

4. Water mains installed under and across creeks or ditches shall be designed according to the following:

   a. Water mains with less than 4’ of cover shall be protected by Class PC concrete encasement a minimum of 10’ past the top of the embankment on each side.

   b. Trench backfill under creeks and ditches shall consist of flowable backfill in accordance with NCTCOG Item 504.2.3.4.

   c. Rock bottom creeks and ditches shall include a 6” concrete cap at the surface in accordance with NCTCOG Item 504.5.2.14 and Standard Drawing 3060.

   d. Bank stabilization shall be required at all crossings and shall consist of a pervious armored surface to resist scour and shear forces on all disturbed areas.

D. Elevated Crossings

1. Elevated crossings for water and wastewater mains should be avoided.

5.9 Corrosion Protection

A. Corrosion protection should be considered on all metal water and wastewater mains that are 16” diameter or greater.

B. Corrosion investigation of metal pipeline sites shall include:

Conditions Requiring Corrosion Protection System

Soil Characteristics	Conditions Requiring Corrosion Protection System
Chloride	>500 ppm
Sulfate	>2,000 ppm
Soil pH	≤ 5.5 or >8.5
Soil/Water Resistivity	<2,000 ohm-cm

C. External and internal protective coating shall be required.

D. To prevent galvanic corrosion for all metal pipes, provide isolating joints by using insulating kits or other means in the following locations:

1. Changes in pipeline materials
2. Connections to existing piping, i.e. old and new piping, including taps
3. Laterals from transmission mains
4. Valve to metal pipe
5. Metallic casing spacer to RCCP, PCCP, DI or Steel pipe

E. All metal pipes that are 16” and larger shall be designed to be electrically continuous through joint bonding wires, or welded joints and shall install corrosion test stations at a maximum spacing of 1,000’.

F. All water and wastewater mains requiring a corrosion protection system shall be designed by a NACE certified professional engineer.

SECTION 6 – LANDSCAPING DESIGN REQUIREMENTS

Section 6 – Landscaping Design Requirements

6.01 General

A. The purpose of this section is to provide additional requirements and standards to address landscaping requirements only **within the medians of major and minor thoroughfares**. Refer to the following ordinances and documents:

1. Zoning Ordinance, Section 2.05 - Special Zoning Districts
2. Zoning Ordinance, Section 4.01 – Tree Preservation Requirements
3. Zoning Ordinance, Section 4.02 – Landscape Requirements

B. Landscape construction plans shall be prepared and sealed by a Landscape Architect licensed to practice Landscape Architecture within the State of Texas.

C. Requirements for landscaping within the parkways are contained in the Zoning Ordinance, Section 4.02.

6.02 Landscape Requirements within the Median

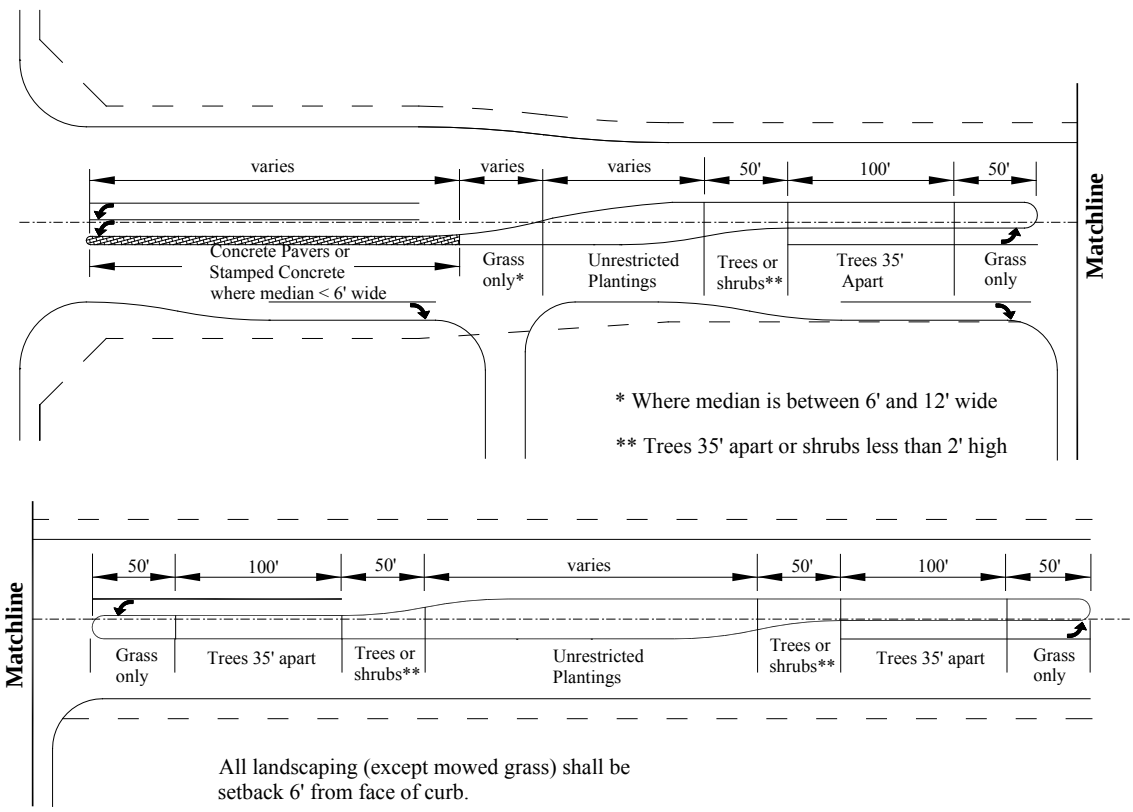

FIGURE 6.1: Typical Median Landscaping

A. Landscaping that is located within the median of a thoroughfare shall meet the requirements shown in Figure 6.1.

B. Refer to Section 2.07 (Thoroughfare Design Requirements) for corner visibility and sight line triangles with regards to landscaping and other obstructions.

C. A minimum of 4" (or 6" in rock) suitable loam topsoil shall be furnished and installed in the areas behind the curbs.

D. Only mowed grasses are permitted within 6' of the existing or future face of curb unless approved by the Director of Engineering Services and Director of Parks and Recreation.

E. Irrigation shall be provided in accordance with the Irrigation Design Standards (Section 7 of the Engineering Standards).

F. Median tree spacing shall be 35' (typical) apart center-to-center of tree trunk generally located in the center of the ultimate median.

G. Trees shall be planted at least 4' from the outside edge of a pipeline.

H. The City has final approval for all tree placements.

I. Trees overhanging walks and parking shall have a minimum clear trunk height of 7'. Trees overhanging public street pavement drive aisles and fire lanes shall have a minimum clear trunk height of 14'.

J. Trees and planting areas shall not be installed on slopes steeper than 3:1.

K. Landscaping shall be located so that pedestrians can walk along the parkway whether a paved sidewalk is provided or not.

L. Sod shall be placed to cover the first 4' behind the curbs of the median area and 2' behind the curb along the parkway along all public roadways in accordance with the City Technical Specifications.

M. Areas not required to be sodded shall be seeded after properly preparing the ground as designated on the plans and in accordance with City Technical Specifications.

N. Conduit for street lighting and irrigation shall be generally located as shown in Figure 6.2 to accommodate trees, street lights and irrigation within the roadway median.

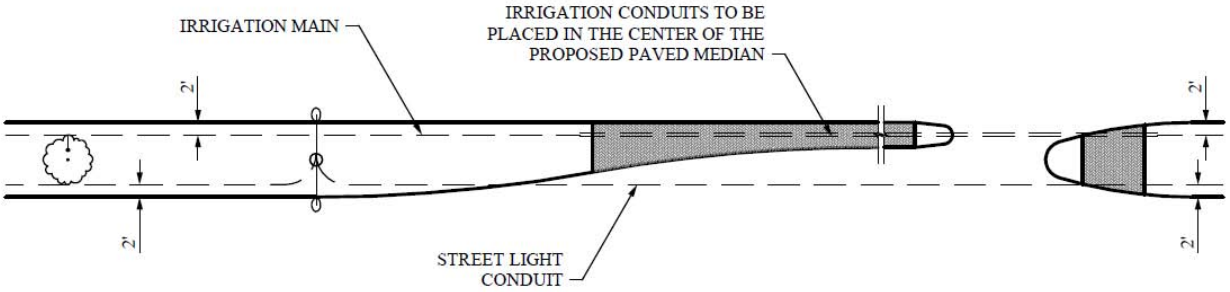

FIGURE 6.2: Conduit for Street Lighting and Irrigation

O. Trees within 200' from the nose of a median shall have foliage trimmed to at least 10' above the ground.

P. Beyond a point 200' from the nose of the median, tree foliage should be trimmed to at least 6' from ground.

6.03 Approved Plant Materials

A. Refer to the online Approved Material List for approved plant materials for median planting. Other species may be utilized with approval from the City's Parks and Recreation Department. Artificial plants are prohibited.

SECTION 7 – IRRIGATION DESIGN REQUIREMENTS

Section 7 – Irrigation Design Requirements

7.01 General

A. The purpose of this section is to provide additional requirements and standards to address irrigation requirements **within the medians of major and minor thoroughfares**. Refer to the following ordinances and documents:

1. Irrigation Ordinance (HB 1656)
2. Water Management Plan
3. Zoning Ordinance, Section 4.02 – Landscape Requirements

7.02 Roadway Irrigation Requirements

A. Irrigation system shall be designed and installed to minimize runoff onto paved surfaces. Overspray on streets and walks are prohibited.

B. Private irrigation system mainlines, valves, or control wire~~s~~ located within the City's right-of-way shall be maintained by the adjacent property owner.

C. The bore depth under streets, drive aisles, and fire lanes shall allow 2' minimum from the bottom of paving to the top of the sleeve, or greater if required to clear other utilities

D. All irrigation piping and boxes shall be purple in color.

E. A separate water meter is required for irrigation.

F. ET controllers shall be installed on AC power.

G. A ball valve is required on the upstream side of control valve and shall be located in a jumbo box.

H. Backflow prevention devices are required for all irrigation systems.

I. Provide a section valve to regulate pressure in the irrigation system.

J. Check valves are required where elevation differences will cause low-head drainage.

K. PVC water lines shall be Pressure Rated Class 200, DR 21.

L. Minimum main line pipe size shall be 1-1/4".

M. Minimum lateral line pipe size shall be 3/4".

N. System shall deliver a minimum residual pressure of 30 pswi at the spray head and 50 pswi for rotors.

O. Each valve shall irrigate a landscape zone containing plant materials with similar water requirements and similar site, slope and soil conditions.

P. Where drip systems are to be used, they shall be designed to provide water uniformly from sub-grade PVC piping.

Q. Trees shall be irrigated with one bubbler each with a separate valve

R. Irrigation heads shall comply with the following:

1. Multi-stream multi-trajectory rotor heads
2. Low precipitation with 0.7DU or greater
3. Selected and spaced for maximum distribution and uniformity.
4. Matched precipitation rates on each zone.
5. Have spring retracted pop-up operation.
6. Installed on green 6" cut off riser.
7. Adjust heads to ensure uniform coverage and to prevent overspray.
8. Shall be installed a minimum of 6" from back of curb and in accordance with current TCEQ regulations.
9. Connect all MSMTR or equivalent heads with bull head connection.

S. Feeder laterals and mainlines shall be located as close to the center of median as feasible.

T. Refer to the Approved Materials List for Median Right-of-Way Irrigation Equipment

7.03 Additional Irrigation Design Requirements within Roadway

A. Two 4" PVC conduits shall run from 2' behind the back of curb from median nose to median nose, extending beyond the limits of hardscape (concrete median nose, pavers, etc). Two 4" PVC conduits shall also run from median to parkway as needed to provide water and power to the median. The end of the conduits shall be clearly marked with a sawcut.

B. No swing pipe or flex pipe allowed in medians.

C. Wiring shall include six 14 gauge (minimum) wires.

D. Refer to Section 6.02, Landscape Requirements within the Median for additional information on location of conduits for street lighting and irrigation in relation to tree planting.

SECTION 8 – ENVIRONMENTAL REQUIREMENTS

Section 8 – Environmental Requirements

8.01 General

The Owner must provide proof of compliance with applicable local, state, and federal environmental regulations upon request by the City.

8.02 Storm Water Management Plan (SWMP) – Permanent Controls

A. General Requirements

A Storm Water Management Plan (SWMP) shall be prepared for all developments in accordance with the Subdivision Ordinance. The SWMP shall be developed and coordinated with the site drainage plan and may be shown on the same sheet. The SWMP shall identify permanent site features and controls that will be constructed with the project to minimize and mitigate the project's long-term effects on storm water quality and quantity.

The SWMP should also be coordinated with the landscaping plan to prevent conflicts and ensure compatible land use.

B. **Site Development Controls (Permanent)**

It is the responsibility of the engineer to design permanent controls that address site specific conditions using appropriate design criteria for the North Central Texas region. Refer to NCTCOG iSWM Technical Manual for current recommended practices. Some of the factors to be considered when evaluating and selecting controls for a development are as follows:

- Effect of the development on runoff volumes and rates
- Potential pollutants from the development
- Percent of site treated by the control
- On-site natural resources
- Configuration of site (existing waterways, topography, etc.)

The following are some examples of permanent controls:

- Preservation of natural creeks
- Site specific stormwater controls
- Vegetated swales
- Preservation of the 100-year floodplain
- Detention ponds
- Retention ponds

8.03 Texas Construction General Permit (CGP)

Construction activities that discharge storm water runoff into or adjacent to any surface water of the state are regulated by the state of Texas under the Construction General Permit (CGP) (TXR150000). The governing agency is the Texas Commission on E nvironmental Quality (TCEQ). Construction activities are regulated according to the area of land disturbed.

Large construction activities
For sites that disturb five or more acres, or are part of a larger common plan of development that will disturb five or more acres, and meet the definition of an operator, the following applies:

- Prepare and implement a Storm Water Pollution Prevention Plan (SW3P)
- Post a Site Notice
- Submit a copy of the Site Notice to the MS4 Operator

For sites that disturb five or more acres, and meet the definition of a primary operator, the following applies:

- Prepare and implement a SW3P
- Submit a Notice of Intent (NOI) to TCEQ
- Post the NOI and Site Notice
- Submit a copy of the NOI to MS4 Operator

Small construction activities
For sites that disturb at least one but less than five acres, or are part of a larger common plan of development that will disturb at least one, but less than five acres and meet the definition of an operator, the following applies:

- Prepare and implement a SW3P
- Post a Site Notice
- Submit a copy of the Site Notice to the MS4 Operator

Sites that disturb less than one acre and that are not part of a larger common plan of development that would disturb one or more acres, are not required to have coverage under the general permit.

Refer to the General Permit definitions for Operator and Primary Operator. Additional information on the Texas Construction General Permit can be found at the following link:

http://www.tceq.texas.gov/permitting/stormwater/

8.04 Storm Water Pollution Prevention Plan (SW3P)

One of the requirements of the Construction General Permit is to develop an SW3P. The purpose of the SW3P is to provide guidelines for minimizing sediment and other pollutants that may originate on the site, from flowing into municipal storm systems, or jurisdictional waters during construction. T he plan must also address the principal activities known to disturb significant amounts of ground surface during construction.

The storm water management controls included in the SW3P should focus on providing control of pollutant discharges with practical approaches that use readily available techniques, expertise, materials, and equipment. The SW3P must be implemented prior to the start of construction activity.

A. Construction Controls

Structural and non-structural controls may be used for controlling pollutants for storm water discharges from small and large sites. Structural controls shall comply with details and specifications in the latest edition of the NCTCOG iSWM Technical Manual and these standards. When the NCTCOG Manual and these standards are in conflict, these standards shall govern.

The following are acceptable temporary controls for use during construction:

Non-Structural

- Minimizing the area of disturbance
- Preserving existing vegetation

Structural

- Silt fence
- Inlet protection
- Rock check dams
- Stabilized construction entrances
- Sediment traps
- Vegetated buffer strips
- Temporary detention structure
- Rock check dams
- Hydromulch

Suggested construction controls can be found on the NCTCOG iSWM website.

It is the responsibility of the design engineer to select and design appropriate construction controls for each site. If the most appropriate control is not shown in the iSWM Technical Manual, the design engineer shall submit calculations and references for design of the control to the Department of Engineering Services for review and approval.

B. Waste and Hazardous Material Controls

Covered containers shall be provided for waste construction materials and daily trash. Hazardous materials shall be stored in a manner that prevents contact with rainfall and runoff. Onsite fuel tanks and other containers of motor vehicle fluids shall be placed in a bermed area with a liquid-tight liner or be provided with other secondary containment and spill prevention controls.

The SW3P shall require federal, state and local reporting of any spills and releases of hazardous materials greater than the regulated Reportable Quantity (RQ) and reporting to Engineering Services of all spills and releases to the storm drainage system.

C. Temporary Stabilization

Portions of a site that have been disturbed, but where no work will occur for more than 21 days shall be temporarily stabilized as soon as practicable, and no later than 14 days, except when precluded by seasonal arid conditions, or prolonged drought.

Temporary stabilization shall consist of providing a protective cover, designed to reduce erosion on disturbed areas. Temporary stabilization may be achieved using temporary seeding, soil retention blankets, hydro-mulches and other techniques that cover 100 percent of the disturbed areas until either final stabilization can be achieved or until further construction activities take place.

Perimeter controls such as silt fence, vegetated buffer strips or other similar perimeter controls are intended to act as controls when stabilization has not occurred. Perimeter controls may remain in place during temporary stabilization.

D. Final Stabilization

Final stabilization consists of soil cover such as vegetation, geo-textiles, mulch, rock, or placement of pavement. For stabilizing vegetated drainage ways, sod or seeded soil retention blankets shall be used. Hydromulch will not be allowed in vegetated swales, channels or other drainage ways.

The plan for final stabilization shall be coordinated with permanent controls in the SWMP and with the landscaping plan, if applicable.

E. Notice of Intent (NOI)

If applicable, copies of the NOI shall be sent to the Engineering Services Department at least 2 days prior to construction.

F. TCEQ Site Notice

A signed copy of the Construction Site Notice shall be posted at the construction site in a location where it is readily viewed by the general public during all construction activity.

G. Notice of Termination (NOT)

All parties that submitted a NOI shall submit a NOT within 30 days after final stabilization is established. When the owner of a residential subdivision transfers ownership of individual lots to builders before final stabilization is achieved, the SW3P shall include controls for each individual lot in lieu of final stabilization. These controls shall consist of stabilization of the right-of-way and placement of structural controls at the low point of each individual lot or equivalent measures to retain soil on each lot during construction. Additionally, the builder must submit a valid NOI before an NOT can be submitted by the owner.

H. Inspection and Maintenance during Construction

The owner shall construct all controls required by the SW3P. The owner shall have qualified personnel inspect the controls at least every two weeks during construction and within 24 hours after a storm event of 0.5 inches, or greater. Alternately, inspections may be performed every 7 days with no additional inspections after rain events.

Certified inspection reports shall be retained as part of the SW3P. Within seven days of the inspection, controls identified as damaged or deteriorated shall be repaired or replaced, as appropriate. controls shall also be routinely cleaned to maintain adequate capacity.

Changes or additions shall be made to the controls within 7 days to prevent discharges from the site. The owner shall implement procedures to remove discharged soil from all portions of the storm drainage system including streets, gutters, inlets, storm drain, channels, creeks, ponds, etc.

Notes requiring the inspection and maintenance shall be placed on SW3P drawings. The SW3P shall identify the responsible party for inspecting and maintaining each control. If no party is identified, each owner and operator that submitted a NOI for the site shall be fully responsible for implementing all requirements of the SW3P.

I. Construction and Maintenance

The owner shall construct all permanent controls and is responsible for maintenance of the controls. When the control falls within a drainage easement, the plat or separate instrument dedicating the easement shall include a statement of the owner's responsibility for maintenance.

SECTION 9 – STRUCTURAL DESIGN REQUIREMENTS

Section 9 – Structural Design Requirements

9.01 General

A. The Design Engineer of record shall bear the sole responsibility for meeting the engineering standard of care for all aspects of the design and providing a design that's required by the site-specific conditions and intended use of the facilities.

B. For the purposes of this section of the Engineering Standards, the following items shall be considered structures: bridges, foundations, retaining walls (structural and gravity), headwalls and wingwalls, culverts, slopes and embankments, and screening walls.

C. The City's review of any structural design is limited to determining whether the construction plans are in general compliance with the City's Master Plans and Engineering Standards. The City's review and release of the construction plans does not represent that the City has re-engineered or verified the engineering of the proposed improvements.

D. The structural design must be signed and sealed by a structural engineer or civil engineer competent in structural engineering licensed in the State of Texas. The Design Engineer is responsible for all engineering and recognizes that specific site circumstances or conditions may require improvements constructed to exceed minimum standards contained in the City's Engineering Standards. The Design Engineer is responsible for the applicability and accuracy of the construction plans and specifications.

E. Walls shall be permitted and constructed in accordance with all requirements of these Engineering Standards. Third-party inspections shall be performed during construction, and reports provided to the City. A third-party shall certify wall was constructed in general compliance with the City-approved plans and specifications, and a certification shall be provided to the City.

9.02 Code Requirements

A. All structural design shall comply with the City's currently adopted version of the *International Building Code*.

B. The design and construction of structural concrete for buildings and where applicable in non-building structures shall be provided in accordance with the requirements of the current version of "Building Code Requirements for Structural Concrete (ACI 318)" as published by the American Concrete Institute.

C. Placing reinforcing steel in reinforced concrete structures shall be provided in accordance with the requirements of the current version of the "ACI Detailing Manual (ACI 315)" as published by the American Concrete Institute.

D. The design and construction of concrete tanks, reservoirs, and other structures commonly used in water and wastewater treatment works where dense, impermeable concrete with high resistance to chemical attack is required shall be provided in accordance with the requirements of the current version of "Environmental Engineering Concrete Structures (ACI 350)" as published by the American Concrete Institute. This code places special emphasis on structural design that minimizes the possibility of cracking and accommodates vibrating equipment and other special loads. ACI 350's minimum requirements for proportioning of concrete, placement, curing, and

protection against chemicals shall be met or exceeded. The design and spacing of joints shall also meet or exceed the minimum requirements of ACI 350.

E. The design and construction of roadway bridges shall be provided in accordance with the requirements of the current version of the "Standard Specifications for Highway Bridges" as published by the American Association of State and Highway Transportation Officials (AASHTO).

F. Concrete exposed to sulfate-containing solutions or soils shall be made with sulfate-resisting cement. The concrete shall be provided in accordance with the requirements of ACI 318 Section 4.3. Table 4.3.1 lists the appropriate types of cement, the maximum water-cementitious material ratios, and the minimum specified compressive strengths for various exposure conditions.

Table 4.3.1 - ACI 318 Section 4.3

Sulfate exposure	Water soluble sulfate (SO_4) in soil, percent by weight	Sulfate (SO_4) in water, ppm	Cement Type	Maximum water-cementitious materials ratio, by weight, normalweight aggregate concrete*	Minimum f_c', normalweight and lightweight aggregate concrete, psi*
Negligible	$0.00 \leq SO_4 < 0.10$	$0 \leq SO_4 < 150$	—	—	—
Moderate†	$0.10 \leq SO_4 < 0.20$	$150 \leq SO_4 < 1500$	II, IP(MS), P(MS), I(PM)(MS), I (SM)(MS)	0.50	4000
Severe	$0.20 \leq SO_4 \leq 2.00$	$1500 \leq SO_4 \leq 10{,}000$	V	0.45	4500
Very severe	$SO_4 > 2.00$	$SO_4 > 10{,}000$	V plus pozzolan‡	0.45	4500

*When both Table 4.3.1 and Table 4.3.2 are considered, the lowest applicable maximum w/cm and highest applicable minimum f_c' shall be used.
†Seawater
‡Pozzolan that has been determined by test or service record to improve sulfate resistance when used in concrete Type V cement.

G. ASTM test method C 1012 can be used to evaluate the sulfate resistance of mixtures using combinations of cementitious materials.

1. In addition to the proper selection of cement, other requirements for durable concrete exposed to concentrations of sulfate are essential, such as, low water-cementitious material ratio, strength, adequate air entrainment, low slump, adequate consolidation, uniformity, adequate cover of reinforcement, and sufficient moist curing to develop the potential properties of the concrete.

H. More stringent requirements may be required for unusual designs or specific site conditions. The codes cannot replace sound engineering knowledge, experience, and judgment.

I. For any structure, the City or the structural engineer may require the quality of materials and construction to be higher than the minimum requirements as stated in the codes.

9.03 Geotechnical Performance Specifications

A. Field investigation, geotechnical testing, and geotechnical engineering shall be performed in accordance with the standard of care taking into account local experience and conditions. The geotechnical recommendations shall establish the minimum design criteria upon which the Design Engineer can rely. However, based on the Design Engineer's experience and engineering judgment, if the Design Engineer is compelled to use more conservative geotechnical design

criteria for his/her structural design, that is the Design Engineer's prerogative. In no case shall the Design Engineer use geotechnical design criteria less conservative than the geotechnical engineer's recommendations.

B. ROW Permit must be obtained prior to performing any boring within the City's right-of-way.

C. The complexity of geological conditions and the type, length, and width of structure will determine the number and locations of test holes required. The following should be considered by the Design Engineer in coordination with the geotechnical engineer: Depth of test hole, location of proposed grade relative to existing grade, channel relocations and/or channel widening, scour, foundation loads, foundation types.

D. Locate the test holes in an accessible area. Avoiding overhead power lines and underground utilities where possible, avoid steep slopes and standing or flowing water. Identify test hole locations on the plans.

E. Provide a complete soil and bedrock classification and log record for each test hole, including all pertinent information to complete the standard log. Location and surface elevation shall be shown on the boring logs.

F. Perform the appropriate field and laboratory tests necessary to determine the soil shear strength for proper soil evaluation and geotechnical design criteria. The geotechnical engineer shall consider the short-term and long-term conditions. In addition, special attention is required when testing highly plastic clays. Tests of these soil types shall be performed at a slow enough rate such that any excess pore water pressure is dissipated, or in a manner that measures pore water pressure.

G. Ground water elevations shall be included as part of the data acquisition. Site conditions may require the installation of piezometers to establish a true groundwater surface elevation and method of monitoring water surface fluctuations

H. Minimum boring requirements are as follows:

1. **Slopes and Embankments including Bridge Approaches.** Obtain soil borings for cuts greater than 10' or embankments taller than10'. The exploration shall include the following:

   a. The soil under future embankments. Advance borings to a depth at least equal to the embankment height or 20', whichever is greater, unless a greater depth is recommended by the geotechnical engineer.

   b. Soil in proposed cuts. Advance borings to a depth of at least 15' below the bottom of the proposed cut, unless a greater depth is recommended by the geotechnical engineer.

2. **Bridges**

   a. In general, drill test holes 10' to 15' deeper than the probable top elevation of the bridge foundation.

   b. Test holes near each abutment of the proposed structure plus a sufficient number of intermediate holes to determine depth and location of all significant soil and rock strata.

c. Major stream crossings (over channels more than 200' wide) require borings in the channel. A site inspection by the driller or logger is necessary to evaluate site accessibility and special equipment needs.

d. Minor stream crossings over channels less than 200' wide shall provide a boring on each bank as close to the water's edge as possible. If boring information varies significantly from one side of the channel to the other, a boring in the channel may be required by the Director of Engineering Services.

e. Grade Separations. If the borings indicate soft surface soils (fewer than 10 blows per foot), additional borings and testing shall be required for the design of the bridge approach embankments.

3. **Retaining Walls** Obtain soil borings for **walls taller than 3-ft**.

a. Obtain soil borings at 200' spacing unless site conditions or the design engineer requires closer spacing. A greater spacing may be allowed by the Director of Engineering Services only if recommended in writing by the geotechnical engineer of record.

b. Fill Walls. For spread footing walls and MSE walls, the depth of the boring shall be a minimum of as deep as the wall height depending on the wall type and existing and proposed ground lines. The minimum boring depth is 10' below the bottom of the proposed wall unless rock is encountered (see Section 9.03.H.4). Extend borings at least 5' into rock for fill walls unless additional depth is recommended by the geotechnical engineer.

c. Cut Walls. For drilled shaft walls, tied-back walls, and soil and rock nail walls, the depth of the boring is based on the proposed ground line. Cantilever drilled shaft walls require the depth of boring to extend the anticipated depth of the shaft below the cut, which is typically between one and two times the wall height unless additional depth is recommended by the geotechnical engineer of record. Borings for soil nail and rock nailed walls need to be advanced through the material that is to be nailed. The minimum boring depth is 15' below the bottom of the proposed wall. Borings for proposed cut walls may need to penetrate rock significant distances depending on the depth of the cut and wall height.

d. Provide additional testing for taller walls, walls on slopes, or walls on soft founding strata as necessary, or recommended by the geotechnical engineer of record, to completely evaluate wall stability.

4. **Borings Encountering Rock**

a. Based on the geotechnical engineer's experience and engineering judgment, if rock is encountered the minimum boring depths specified above may be reduced but only at the direction of the geotechnical engineer.

9.04 Bridge Design

A. The structural engineer shall be responsible for selecting the appropriate bridge foundation. The engineer shall consider the following factors in that selection:

1. Design load. The magnitude of the design load dictates the required size of the foundation.

2. Geotechnical engineering recommendations. The strength and depth of subsurface formations determine the type of foundation chosen. In general, drilled shafts are well suited to areas with competent soil and rock, and is the preferred foundation type subject to concurrence of the geotechnical and structural engineers' concurrence. Alternative foundation types require approval in writing by the Director of Engineering Services.

3. Corrosive conditions. Salts, chlorides, and sulfates are detrimental to foundations. Where these conditions exist, the Design Engineer shall take preventative measures. Use sulfate-resistant concrete as defined in these Engineering Standards as required.

B. The structural engineer shall use the geotechnical investigation recommendations as minimum design criteria. If in the structural engineer's judgment, the structural design needs to be based upon more conservative geotechnical design criteria, the structural engineer shall provide the more conservative design.

C. Disregard surface soil in the design of drilled shaft foundations. The disregarded depth is the amount of surface soil that is not included in the design of the foundation due to potential erosion from scour, future excavation, seasonal moisture variation (shrinkage and swelling), lateral migration of waterways, and recommendations of the geotechnical investigation.

D. Drilled shaft capacity relies upon penetrating a specific stratum a specified depth. The plans shall provide a note instructing the contractor and field personnel of the penetration requirement. The plans shall identify the specific type of material to be penetrated and the minimum penetration depth. The plan may allow for the drilled shaft to be shortened if the founding stratum is encountered at a shallower depth, and it requires the shaft to be lengthened if the founding stratum is not encountered at the expected elevation.

   When the founding stratum is present at or near the surface, the structural engineer shall consider the load-carrying capacity along with the stability of the superstructure on the foundation. For these conditions, a minimum drilled shaft length shall be specified on the plans and the drilled shaft will not be allowed to be shortened from plan length, but it may be lengthened if the founding stratum is not encountered at the expected elevation.

E. Bridge foundations for new bridges over waterways require a scour analysis. A scour analysis shall be conducted in accordance with the following:

   1. TxDOT guidelines in "Evaluating Scour at Bridges" (HEC-18).

   2. Abutment scour does not need to be calculated. However, abutments shall be protected against potential scour through use of flexible revetment, where possible or hard armoring.

   3. Design bridge foundations to withstand the scour depths for either the 100-year flood or smaller flood if it will cause scour depths deeper than the 100-year flood.

   4. Check the bridge foundations against the scour depth associated with the 500-year flood. This flood event is considered an extreme event and the factor of safety on the bridge foundations shall be greater than or equal to 1.

9.05 Retaining Wall Design

A. The Design Engineer is responsible for ensuring that the retaining wall selected for a given location is appropriate. The retaining wall selection process shall consider the following:

1. Height. Any retaining wall exceeding 3-ft. in height measured from the top of foundation and/or pier to the top of wall shall be engineered. The structural design shall be provided in accordance with the geotechnical recommendations and minimum design criteria provided in Section 9.03.

2. Geometry. Determine applicability of wall type - cut, cut/fill, or fill – based on geometry, site constraints, existing and proposed topography, and wall alignment and location. Identify available ROW and any necessary ROW or easements to accommodate the proposed improvements and the access necessary to accommodate access for maintenance. Identify location and type of existing and proposed utilities and drainage structures.

3. Economics. Evaluate the total installed cost of the wall and consider long-term maintenance requirements. Identify necessary excavation requirements (including shoring), required utility adjustments and costs, project schedule, construction phasing requirements, and these effects on the wall design and construction.

4. Stability. The Design Engineer is responsible for the global stability of the wall. Evaluate all walls to ensure that the minimum applicable factors of safety are a least met (see Section 9.05.C), if not exceeded depending on the Design Engineer's judgment. When possible, avoid placing walls on slopes. A slope in front of the wall dramatically reduces the passive earth pressure (resistance), increasing the chance for wall failure. Additionally a slope in front of the wall will have a significant effect on global stability of the wall and embankment in which it resides. For situations where the walls above a slope cannot be avoided, a rigorous slope stability analysis shall be required in accordance with these Engineering Standards.

5. Constructability. Determine whether walls are near water or subject to inundation or groundwater. Identify access limitations for equipment both during and after construction. Ensure adequate horizontal and vertical clearances are provided.

6. Drainage. Design the wall to prevent the build-up of hydrostatic pressure behind the wall. If conditions warrant, the City may require the wall design to withstand full hydrostatic pressure load. The wall design shall consider potential deleterious short and long term effects of water inundation including scour and rapid draw down.

7. Aesthetics. Ensure that aesthetic treatments of walls complement the retaining wall and does not interfere with the functionality of the wall. Detailed consideration shall be given to aesthetic treatments of retaining walls that involve landscaping. Additionally, the wall's drainage system design shall avoid potential compromise of the wall aesthetics because of water related damages.

8. Loading. Design loads shall be in accordance with these Engineering Standards (for building code references, see Section 9.02), including construction loads and surcharge loads from slopes, structures, and vehicles.

B. Analyze and design walls following accepted geotechnical engineering industry standards for the City of Frisco area and in accordance with these Engineering Standards. In analysis, use earth pressures that follow the requirements of the project's geotechnical investigation specifically addressing the retaining wall design requirements for the project's specific location.

C. The Design Engineer must ensure that the retaining wall system is appropriate for its location and application. The Design Engineer shall design for all potential modes of wall system failure;

including, sliding, overturning, bearing pressure, global stability, and structural capacity of the wall itself. The design of the retaining wall shall meet the following minimum factors of safety:

a. Sliding: 1.5

b. Overturning: 2.0

c. Bearing Pressure: 3.0

d. Global Stability: 1.5

D. Avoid perching wall on slopes steeper than 8H:1V. When walls must be placed on slopes steeper than 5H:1V, or the retaining wall height or the combined wall and slope heights exceed 8-ft., the geotechnical engineer shall conduct a short-term and long-term global stability analysis using applicable soil strength characteristics, geometry, and loading conditions (including load surcharge, hydrostatic, etc.). The Design Engineer is responsible for the design of the wall system, including its global stability.

E. A series of two or more walls built in tiers shall be considered a single wall in height for the purposes of conforming to these Engineering Standards when the base of the upper tier is set back from the base of the lower tier less than two times the height of the lower tier wall.

F. If TxDOT standard sheets pertaining to cast-in-place spread footing structural retaining walls are utilized, the Design Engineer shall ensure that the actual wall geometry and loading conditions are applicable to the standard wall design selected. The Design Engineer shall ensure that interruptions to the wall stem or footing reinforcement by openings, utilities, geometric changes or curved sections of the wall do not compromise the design and performance of the wall. No TxDOT standard wall design shall be modified unless the Design Engineer designs, draws, and seals the modified standard.

G. TxDOT standard sheets pertaining to cast-in-place spread footing walls provide a choice between high pressure (HP) and low pressure (LP) footings. Selection by the Design Engineer is a function of the loading, geometry, and allowable soil pressures. **TxDOT standard sheets pertaining to cast-in-place spread footing walls are developed based on the wall being drained, and the design parameters for foundation and retained soils of a cohesion factor of zero, a friction factor of 30 degrees, and a unit weight of 120 pounds/cubic foot.** Give special consideration to the site-specific geotechnical requirements and whether a TxDOT standard wall design is applicable. Also give special consideration to walls subject to potential inundation.

9.06 Slope Stability Design Criteria

A. All slopes exceeding 8-ft. in height with a steepness of 4H:1V or greater, regardless of soil type, cut, or fill, shall be evaluated for global stability for both the short-term and the long-term conditions. Additionally, any known areas of existing fill, deleterious material, or soft soils which have a height over 4 feet or slope angle greater than 6H:1V shall be evaluated for global stability for both the short-term and the long-term conditions. Specific site conditions may require evaluation for additional types of slope failure, such as bearing capacity, settlement, shear, and undercutting. Calculations pertinent to the analysis shall be submitted with the construction drawings when required by the City.

B. Use the following data to analyze global stability of a slope:

1. Geometry (cross section and loading conditions);
2. Location of the water table;
3. Soil/rock stratigraphy; and
4. Soil/rock properties (unit weight, Atterberg Limits, undrained and drained shear strength).

C. For global stability of a slope, the minimum factor of safety of 1.5 is required unless the geotechnical engineer recommends a higher value.

9.07 Screening Wall Design Criteria

A. Screening Walls shall meet the minimum requirements included in the Subdivision Ordinance, Section 8 and the Zoning Ordinance, Section 4.03 – Screening Standards. <LINK>

B. An opening designed to allow for storm water drainage shall be provided unless it has been determined by the Director of Engineering Services that no drainage problems are anticipated. The opening shall be a uniform 2" high the full length between columns.

C. All screening walls shall be designed by a Professional Engineer licensed in the State of Texas. Signed, sealed and dated plans shall be submitted to the City for review and permitting.

9.08 Excavation Support

A. Trench excavation protection shall be used for the installation of linear drainage or utility facilities that result in trenches deeper than 5'. Such trench protection includes vertical or sloped cuts, benches, shields, support systems, or other systems providing the necessary protection in accordance with Occupational Safety Heath Administration (OSHA) Standards and Interpretations, 29 CFR 1926, Subpart P, "Excavations."

B. Temporary special shoring is used for installations of walls, footings, and other structures that require excavations deeper than 5'. Temporary special shoring is designed and constructed to hold the surrounding earth, water, or both out of the work area. It provides vertical or sloped cuts, benches, shields support systems, or other systems to provide the necessary protection in accordance with the approved design. Unless a complete design for temporary special shoring systems are included in the plans, the contractor is responsible for the design of the temporary special shoring system. The Contractor must submit to the City, for informational purposes only, the design calculations and details sealed by a Professional Engineer licensed in the State of Texas before constructing the shoring. The design of the shoring must provide protection in accordance with Occupational Safety Heath Administration (OSHA) Standards and Interpretations, 29 CFR 1926, Subpart P, "Excavations."

9.09 Construction Plans

A. Constructions drawings and technical specifications for **all structural** construction shall include the following:

1. Design engineer's seal, date, signature, and Texas Board of Professional Engineers (TBPE) firm registration number;
2. Name and date of issue of the codes and supplements to which the design conforms;

3. Name and date of the project-specific geotechnical engineering report upon which the Design Engineer relied;

4. Live load and other loads used in the design, including surcharge loads and potential exposure to storm water inundation. Specifically identify the applicable loads and their load factors;

5. Identification of geotechnical investigation and report to which the design conforms (including report name and number (if applicable), date of issuance, engineering firm name and address, firm TBPE firm registration number, and name of geotechnical engineer of record).

6. Where plans indicate compacted soil, provide compaction specification.

7. Specified compressive strength of concrete at stated ages or stages of construction for which each part of the structure is designed.

8. The design shall specifically address construction loading and sequencing. Service loads shall not be applied until the concrete has reached its minimum specified compressive strength or the structure is adequately shored to withstand the service loads;

9. Drainage system (if applicable), including material specification, diameter, daylight point, and outfall connection detail (if applicable), granular material (if applicable) specification, filter fabric material specification and installation requirements, and weepholes (if applicable), including material type, diameter, and spacing;

10. Size and location of all structural elements, reinforcement, and anchors;

11. Identification of shop drawing requirements for fabrication, bending, and placement of concrete reinforcement. Provide bar schedules, stirrup and tie spacing, diagrams of bent bars, and arrangement of concrete reinforcement. Provide additional details for reinforcement of openings in concrete walls and slabs. Shop drawings shall be provided in accordance with the requirements of the technical specifications and submitted to the City for review and approval.

12. Provisions for dimensional changes resulting from creep, shrinkage, and temperature;

13. Details of all contraction, isolation joints, or expansion joints and the appropriate spacing specified;

14. Anchorage length of reinforcement and location and length of lap splices (if applicable);

15. Type and location of mechanical splices of reinforcement (if applicable). Welding of reinforcement shall not be permitted unless approved by the Design Engineer and the Director of Engineering Services;

16. The technical specifications for concrete mixtures shall be provided in accordance with the following:

    a. Concrete for roadway pavement and related facilities (i.e. driveways, sidewalks, ramps, etc.) shall be in accordance with the City's technical specification 321313-Concrete Pavement;

b. Cast-in-place concrete applicable to TxDOT standard designs for storm drainage culverts and related structures, retaining walls, manholes, vaults, as well as bridges, shall be in accordance with the City's technical specification 033105-Concrete Structures-Cast-in-Place (TxDOT). Otherwise, concrete for cast-in-place structures shall be in accordance with the City's technical specification 033100-Concrete Structures Cast-in-Place (City); and

c. Precast concrete applicable to precast pipes, TxDOT standard designs for storm drainage culverts and related structures, manholes, vaults, as well as bridges, shall be in accordance with the City's technical specification 034105-Concrete Structures-Precast (TxDOT). Otherwise, concrete for precast structures shall be in accordance with the City's technical specification 034100-Concrete Structures-Precast (City);

17. Responsibility for maintenance of the structure shall be clearly noted on the plans. The plans shall clearly reference a structure maintenance plan and schedule. The maintenance plan shall clearly identify any drainage system required to relieve hydrostatic pressure on the structural system and ensure that it remains fully functional throughout the life of the structure; and

18. Sight visibility triangles (where applicable).

B. **Retaining wall** plans shall also include the following information:

1. Plan view. The plan view shall include location of soil borings, surface and subsurface drainage structures and utilities that could be affected by wall construction.

2. Elevation view. The elevation view shall include a profile of the existing ground line along the wall alignment, proposed finished grade at face of wall, limits of wall payment (if applicable), top of wall profile, soil boring log shown at the correct elevation and scale, wall rail if applicable, drainage structures and utilities as noted above. Unless noted otherwise and approved by the Director of Engineering Services, wall quantities shall be based upon the surface area of the wall from the top of wall to the bottom of wall. The bottom of wall is defined as the proposed finished grade at the face of the wall. The bottom of wall shall not be measured from the top of footing unless the top of footing is the proposed finished grade at the face of the wall.

3. Estimated quantity table. Include the estimated quantity table for each retaining wall type. The table should contain the area of wall (for payment) and linear footage of railing (if applicable).

4. Typical section. The typical section shall include a cross section with wall dimensions and showing the relationship of the wall to the roadway, property line, or controlling adjacency, control point(s) for horizontal and vertical alignment (typically the top outermost corner of the wall), indication of maximum slope on top of and in front of the wall, location of proposed finished grade, railing type, flume, and mow strip, etc. if applicable.

5. General notes. The general notes shall include a note stating the required minimum embedment depth of the footing (minimum typically 1'), a note stating that the wall quantity shall be measured for payment between the top of wall and "x" ft. below finished grade, railing shop drawing requirements (if applicable), references to all standard sheets (if applicable) for pertinent information, and any other pertinent information regarding wall design and construction.

C. **Spread Footing Retaining Wall** plans shall also include the following:

1. If TxDOT retaining wall standards are used, provide the panel design designation (for example, LC-10-32) for each wall panel corresponding to the appropriate cast-in-place spread footing wall standard sheet. The designation includes a reference to the controlling standard drawing, design height, and panel width.

2. Location of expansion and allowable construction joints (assuming 32' panels, every third joint is typically designated as an expansion joint).

3. Set bottom of wall (top of footing) horizontal and stepped to meet minimum embedment depth criteria. Distance from one step to the next is typically greater than 12". Provide bottom of wall elevations for all panels.

4. Include the appropriate TxDOT standard sheets pertaining to cast-in-place spread footing walls if applicable. Otherwise provide typical section details including a cross section with dimensions and reinforcement layout and callouts.

5. If TxDOT standard sheets pertaining to cast-in-place spread footing walls are not applicable to the design, a custom structural wall design shall be provided. The general notes shall specifically identify the applicable concrete specification, the requirement that no service loads shall be imposed until after the concrete has reached its specified minimum compressive strength, and that shop drawing submittals shall be required for fabrication, bending, and placement of concrete reinforcement.

D. **Screening Wall** plans shall include the following information (in addition to the information included under 9.09A):

1. The title shall include the legal name of the property on which the wall is being constructed;

2. A plan view of the wall showing its location, limits, and stationing;

3. Wall material specification;

4. Mortar specification (if applicable).

5. A profile of the wall including grades for the top of the concrete mow strip, adjacent top of curb, sidewalk and finished floor of proposed and/or existing adjacent slabs;

6. Elevation view of a typical column;

7. Elevation view of the wall;

8. Mow-strip detail;

9. Drainage clearance under wall (uniform 2");

10. Steel tensile strength;

11. Concrete compressive strength; and

12. Wind load calculations

13.

E. **Gravity Retaining Walls** plans shall also include the following:

1. Wall height, including batter requirements;
2. Wall material specification;
3. Base embedment depth and width requirements, including key depth if applicable;
4. Wall thickness at bottom and top of wall;
5. Mortared zone requirements (if applicable), including zone thickness and the specification to mortar on all sides and no voids;
6. Non-mortared zone requirements (if applicable), including zone thickness and the specification that stones must fit tightly; and
7. Clay cap, including material specification and dimension requirements.

F. **Calculations** pertinent to the design of any and all walls shall be submitted with the construction drawings when required by the City.

G. All wall construction plans and specifications submitted to the City for review must include a permit application submittal.

9.10 Construction Inspection and Certification

A. A permit is required for the construction of any wall as defined in these Engineering Standards.

B. Third-party inspections shall be performed during construction, and reports provided to the City. The inspections and reports shall be performed at the following stages of construction (at a minimum):

a. Sub-base preparation geotechnical testing

b. Pre-pour / sub-base / footing:

i. Drilled shaft drilling and concrete placement (if applicable); and

ii. Forming of footing, beam, placement of reinforcement (if applicable)

c. Wall construction;

d. Backfill placement - geotechnical testing

e. Drainage system construction (if applicable); and

f. Final completion

C. A third-party shall certify wall construction inspections were performed at the prescribed stages of construction in accordance with Section 9.10.B. The inspection reports and final certificate of compliance shall be submitted to the City and include the following:

a. Specific reference to the City-approved plans and specifications for the wall;

b. Specific reference to the address and/or legal description for the wall construction location;

c. Specific reference to the name and date of the project-specific geotechnical engineering report;

d. A certification letter signed and sealed by a licensed professional engineer in the State of Texas, that includes a statement that the wall system was constructed in general compliance with the geotechnical design criteria identified in the plans and specifications and the City-approved construction plans and specifications.

SECTION 10 – SURVEY REQUIREMENTS

Section 10 – Survey Requirements

10.01 General

1. In the interpretation and application of the provisions in these survey requirements, it is the intention of the City that the principals, standards and requirements provided herein shall be minimum standards for the projects involving survey, and where other Ordinances of the City are more restrictive, such Ordinances shall control, as they exist or may be amended. Refer to the Frisco Survey MonumentMetadata

2. Frisco Survey Monument Map

3. Frisco Survey Monument Sketches

10.02 Survey Markers and Monumentation

A. Markers

Markers consisting of minimum 3/8" diameter steel rods at least 24" long with caps identifying responsible surveying firm or RPLS number shall be placed at all:

1. Lot and block corners (wherever a lot line bearing changes);

2. Intersection points of alley and block lines;

3. Curve and tangent points along block, lot and right-of-way lines within the subdivision; and

4. Right-of-way dedications.

B. Monuments

Monuments shall be installed and three dimensional coordinates noted on the Plat. Coordinates shall be established using the City's Monumentation System and using the City's Combined Scale Factor.

C. Subdivision Monumentation

At least two Markers shall be placed at property corners in addition to at least two Monuments at opposing ends of the property.

D. Capital Improvements Project Monuments

Found existing right-of-way monuments, survey markers, or property corners, and proposed monuments shall be shown on the construction drawings and located by station and offset, right or left from the control line, base line or center line, or by northing and easting.

E. If new construction will damage, destroy, or alter existing survey markers, monuments, or property corners, they must be re-set prior to final acceptance.

F. Electronic Submittal Requirements

The City requires the submittal of CAD files for all plats within the City of Frisco for incorporation into the City's GIS system. The Engineer must provide Grid Coordinates (State Plane) or Surface Coordinates with Scale Factor. The electronic files shall include the following:

1. Two Monuments (with three-dimensional coordinates);
2. Markers at a minimum of two property corners (with three-dimensional coordinates);
3. Parcel boundaries; and
4. Right-of-way and easement dedications.

10.03 Final Plat Acceptance

A. Prior to Final Plat Acceptance, all required Monuments must be found and re-set if damaged during construction.

1. The Surveyor will provide two Monuments acceptable to the Cityand establish grid coordinates for the monuments in reference to the City of Frisco GPS Monuments.
2. Elevations will be established on the two monuments on the vertical datum in reference to the City of Frisco GPS Monuments.
3. The three dimensional coordinates in grid coordinates established for these monuments will be clearly shown on the face of the plat. A note shall be added to the plat specifying the grid coordinates are not for design purposes.
4. The plat shall hold grid bearings and shall not be from an assumed north.
5. All distances shown on the plat will be surface distances.
6. Refer to Development Application Handbook for required language on plats.
7. In order to ensure that all necessary easements are reflected on the Final Plat, a preliminary inspection should be completed after all construction work has been done before the Final Plat is submitted for approval.

GN

GENERAL NOTES

GN – General Notes

Overview

The following General Notes are shall apply to all construction projects, public or private. The Owner's Engineer may supplement the General Notes with project-specific notes with City approval.

General Notes for All Construction Activities

1. All construction, testing, and materials shall be in accordance with the City's current standards, details, and specifications.

2. Testing and inspection of materials shall be performed by a commercial testing laboratory approved by the City. Contractor shall furnish materials or specimens for testing, and shall furnish suitable evidence that the materials proposed to be incorporated into the work are in accordance with the specifications.

3. Contractor shall notify the City at least 48 hours prior to beginning any construction.

4. Contractor is responsible for obtaining all necessary permits and approvals prior to beginning any construction. Contact ROW Inspection division of Public Works at 972-292-5820 for a permit to work within City ROW.

5. Contractor must keep available on-site at all times approved construction plans and copies of any required permits along with the current versions of the following references: City of Frisco Engineering Standards, NCTCOG specifications, TxDOT specifications, TxDOT standard drawings.

6. All shop drawings, working drawings or other documents which require review by the City shall be submitted by the Contractor sufficiently in advance of scheduled construction to allow no less than 14 calendar days for review and response by the City.

7. The Contractor shall be responsible for all required construction surveying and staking and shall notify the City of any discrepancies prior to proceeding with any work.

8. Contractor shall be responsible for protecting all survey markers including iron rods, property corners, or survey monuments within the limits of construction and outside ROW during construction. Any survey markers disturbed during construction shall be replaced by the Contractor at no cost to the City.

9. Contractor shall provide a construction schedule with weekly progress reports.

10. Contractor is responsible for keeping streets and driveways adjacent to the project free of mud and debris at all times. Contractor shall clean up and remove all loose material resulting from construction operations. The Contractor shall take all available precautions to control dust.

11. The existence and locations of the public and franchise utilities shown on the drawings were obtained from available records and are approximate. The Contractor shall determine the depth and location of existing underground utilities prior to excavating, trenching, or drilling and shall be required to take any precautionary measures to protect all lines shown and / or any other underground utilities not of record or not shown on the plans. The Contractor shall be responsible for contacting all public agencies and franchise utilities 48 hours prior to construction. (Dig-Tess 1-800-344-8377) The

Contractor may be required expose these facilities at no cost to the City. The Contractor will be responsible for damages to utilities if the damage is caused by negligence or failure to have locates performed.

12. The Contractor shall be responsible for any damage to existing facilities or adjacent properties during construction. Any removal or damage to existing facilities shall be replaced or repaired to equal or better condition by the Contractor.

13. Contractor shall be responsible for furnishing and installing all temporary and permanent traffic control in accordance with the minimum requirements of the latest revision of the Texas Manual on Uniform Traffic Control Devices (TMUTCD) and TxDOT Barricade and Construction Standards.

14. Contractor shall not impede traffic on existing streets, driveways, alleys, or fire lanes open to the public. In the event the construction work requires the closure of an existing street, alley, or fire lane, the Contractor shall request the road closure through the City Traffic Division 972-292-5400 a minimum of 48 hours in advance of the requested closure. Closureswill not be allowed prior to 9:00 a.m. or after 3:30 p.m., Monday through Friday unless otherwise approved by the City.

15. Contractor shall not store materials, equipment or other construction items on adjacent properties or right-of-way without the prior written consent of the property owner and the City.

16. Temporary fencing shall be installed prior to the removal of existing fencing. Temporary fencing shall be removed after proposed fencing is approved by the City. All temporary and proposed fencing locations shall be subject to field revisions as directed by the City.

17. Unusable excavated material, or construction debris shall be removed and disposed of offsite at an approved disposal facility by the Contractor at his expense.

18. Contractor shall avoid damage to existing trees. When necessary, trees and shrub trimming for construction shall be performed by certified tree worker or under the direction of a registered landscape architect or certified arborist.

19. Erosion control devices shall be installed on all projects prior to beginning construction and shall be maintained throughout the project in a condition acceptable to the City.

20. Contractor shall locate and protect all existing landscape irrigation systems. Damage to existing irrigation systems and landscape materials shall be restored to equal or better condition at no cost to City.

21. It is the Contractor's responsibility to maintain a neat and accurate record of construction for the City's records.

General Notes for Paving

1. All paving construction, testing, and materials, including concrete, reinforcement, jointing, and subgrade preparation and treatment shall be in accordance with the City's current standards, details, and specifications unless otherwise noted.

2. Absolutely no earthwork, lime application, or other preparation of the subgrade for paving of streets, alleys, or fire lanes shall be initiated without authorization from the City. The City will authorize the subgrade work in preparation for paving after utility trench backfill testing has been completed and

verified to meet the City requirements.

3. Contractor is responsible for ensuring all pedestrian work meets or exceeds the current American with Disabilities Act Accessibility Guidelines (ADAAG) and the Texas Accessibility Standards (TAS). The Contractor shall remove and replace any constructed or installed items not meeting the current ADAAG and TAS requirements at no additional cost to the City.

General Notes for Traffic Signals and Street Lighting

1. All traffic signal and street lighting construction, testing, and materials shall be in accordance with the City's current standards, details, and specifications unless otherwise noted. All electrical work shall be in accordance with the most current National Electrical Code, City and TxDOT specifications and standards.

2. Contractor shall notify the Traffic Department (Tracy Nichols) at least 7 business days prior to any work, provide a construction schedule with weekly progress reports, and notify the Traffic Department at least 48 hours prior to signal turn-on.

3. Contractor shall coordinate electrical services with the City and either ONCOR or COSERV representatives (according to their respective area).

4. Contractor shall coordinate with the electric company to de-energize any overhead or underground power lines. Any cost associated with de-energizing the power line and/or any other protective measures required shall be at no cost to City.

5. The Contractor shall coordinate with the appropriate utility company and TxDOT/NTTA (if within TxDOT/NTTA ROW) prior to beginning erection of poles, luminaries and structures located near any overhead or underground utilities.

6. Proposed concrete foundation and conduit alignment shall be staked by the Contractor and approved by the City prior to installation.
7. Contractor shall contact the City (Tracy Nichols) for inspection prior to pouring any concrete foundation and digging for conduit runs at least 48 hours in advance (between 8 am – 5pm).

8. Contractor shall have a qualified IMSA Level II or a TRF453 certified technician on the project site to place the traffic signals in operation.

9. Electrical work shall be performed by certified persons in accordance with the requirements of the contract and may be rejected as unsuitable for use due to poor workmanship. The required electrical certification course is available and is scheduled periodically by TEEX. Alternatively, the Contractor may purchase an entire course for their personnel to be held at a time and location of their choice as negotiated through TEEX. For more information, contact: TEXAS ENGINEERING EXTENSION SERVICE (TEEX), TxDOT ELECTRICAL SYSTEM COURSE, (979) 845-6563.

10. The Contractor shall not place pedestrian crosswalk and stop bar pavement markings until signal is operational.

11. All lighting poles, fixtures, and arms which are removed shall be delivered to the City Public Works facility (11300 Research Road, Frisco, Texas 75034) by the Contractor and will remain the property of the City. Contact the Traffic Department at least 24 hours in advance of delivery.

12. During the 30-day traffic signal test period, Contractor shall respond to and diagnose all trouble calls with qualified personnel within a reasonable travel time from a Dallas address, but not more than two (2) hours maximum. Contractor shall repair any malfunctions of signal equipment supplied by Contractor on the project. A local telephone number (not subject to frequent changes) where trouble calls are to be received on a 24-hour basis shall be provided to the City by the Contractor. Appropriate repairs shall be made within 24 hours. The Contractor s keep a record of each trouble call reported in the logbook provided by the City and shall notify the City of each trouble call. The error log in the malfunction management unit (MMU) shall not be cleared during the 30-day test period without the approval of the City.

13. Texas State Law, Article 1436C, makes it unlawful to operate equipment or machines within 10-feet of any overhead electrical lines unless danger against contact with high voltage overhead lines has been effectively guarded against pursuant to the provisions of this Article. When construction operations require working near an overhead electrical line, the Contractor shall contact the owner/operator of the overhead electrical line to make adequate arrangements and to take necessary safety precautions to ensure that all laws, electrical line owner/operator requirements and standard safety practices are met.

General Notes for Storm Drain

1. All storm drain construction, testing, and materials shall be in accordance with the City's current standards, details, and specifications unless otherwise noted.

2. Contractor shall submit a Trench Safety Plan prior to the Pre-Construction Meeting.

General Notes for Water and Wastewater

1. All water and wastewater construction, testing, and materials shall be in accordance with the City's current standards, details, and specifications unless otherwise noted.

2. Contractor shall submit a Trench Safety Plan prior to the Pre-Construction Meeting.

3. Contractor shall not operate existing valves. Contact the City's Public Works Department to request valve changes.

General Notes for Landscaping

1. All landscaping construction, installation, testing, and materials shall be in accordance with the City's current standards, details, and specifications unless otherwise noted.

2. Where transplanting or tree removal is required Contractor must apply for a Tree Permit prior to obtaining a grading permit or scheduling the pre-construction meeting. Contact Development Services Landscape Architect for Tree Permit.

3. Prior to obtaining a grading permit or scheduling the pre-construction meeting, all tree markings and protective fencing must be installed by the Contractor and be inspected by the City's Landscape Architect.

4. All trees which are to remain on site shall be protected with a 4' tall brightly colored plastic fence placed at the drip line of the trees.

5. Trees to be removed may be chipped and used for mulch on site or hauled off-site. Burning of removed trees, stumps, or foliage requires written approval by the Fire Department.

6. Plant materials shall not impede or obstruct vision or route of travel for vehicular, pedestrian, or bicycle traffic along City right-of-way, visibility easements, sidewalks or other easements.

7. No signs, wires, or other attachments other than those of a protective nature shall be attached to any tree to remain on site.

General Notes for Irrigation

1. All irrigation construction, installation, testing, and materials shall be in accordance with the City's current standards, details, and specifications unless otherwise noted.

2. A permit from the Building Inspection Division is required for each irrigation system.

3. Contractor shall notify the Parks Department of any modification to the existing system.

4. Contractor shall schedule a meeting with the Parks Department to coordinate work prior to any demolition or removal of existing irrigation and prior to any installation of new irrigation.

5. Contractor shall locate and protect all existing landscape irrigation systems. Damage to existing irrigation systems and landscape materials shall be restored to equal or better condition at no cost to City.

6. Contractor shall program each controller zone based on sprinkler type, plant variety, soil characteristic, slope and solar orientation as designated on the plans. The Contractor shall coordinate with the City Parks Department for approval of the controller settings.

7. Contractor shall be responsible for coordinating with franchise utility provider to provide power to each irrigation controller. Contractor shall have underground power lines installed from power source up to the controller. Contractor shall meet controller specifications for power requirements.

8. Contractor shall set a temporary controller to establish landscape. Once landscape is established, Contractor shall contact the City's Parks and Recreation Department for assistance on installation of Inter Spec controller.

General Notes for Erosion Control & Stormwater

1. Steel posts shall not be used to install erosion control measures within City ROW.

2. No equipment shall be cleaned on-site, or other liquids deposited and allowed to flow overland or subterranean within the limits of the critical root zone of trees that remain on site. This includes paint, oil, solvents, asphalt, concrete, concrete equipment wash water, mortar of similar materials.

3. Asphalt bags shall be placed at construction entrances to prevent curb damage.

4. Geotextile fabric shall be placed on subgrade prior to stone placement for construction entrances.

TS

TECHNICAL SPECIFICATIONS

Technical Specifications

Table of Contents

Spec No.	Description	Date
DIVISION 01 – General Requirements		
015813	Project Sign	May 2012
017113	Mobilization	May 2012
017416	Dust Control	May 2012
DIVISION 02 – Existing Conditions		
024100	General Site Preparation	May 2012
DIVISION 03 - Concrete		
032100	Reinforcing Steel	May 2012
032200	Welded Wire Fabric	May 2012
033100	Concrete Structures – Cast-in-Place (City)	May 2012
033101	Drilled Shaft Foundation	May 2012
033105	Concrete Structures – Cast-in-Place (TxDOT)	May 2012
033106	Concrete Retaining Walls (TxDOT)	May 2012
034100	Concrete Structures – Precast (City)	May 2012
034105	Concrete Structures – Precast (TxDOT)	May 2012
DIVISION 07 – Thermal and Moisture Protection		
071300	Moisture Barrier	May 2012
DIVISION 26 - Electrical		
260500	Electric Conductor	May 2012
260501	Electrical Service	May 2012
265619	Luminaire Pole	May 2012
265620	Luminaire Fixture	May 2012
DIVISION 27 - Communications		
270500	Conduit	May 2012
DIVISION 31 - Earthwork		
312316	Unclassified Street Excavation	May 2012
312317	Unclassified Channel Excavation	May 2012
312323	Select Fill	May 2012
312413	Embankment	May 2012
312500	Temporary Erosion, Sedimentation, and Water Pollution Prevention and Control	May 2012
313419	Geotextile	May 2012
313600	Gabions and Gabion Mattresses	May 2012
313700	Riprap	May 2012
DIVISION 32 –Exterior Improvements		
321112	Moisture Treated Subgrade	May 2012
321113	Lime Treatment	May 2012
321116	Flexible Subbase or Base (Crushed Stone/Concrete)	May 2012

321123	Sand Bedding	May 2012
321126	Asphalt Base Course	May 2012
321133	Portland Cement Treatment	May 2012
321216	Hot Mix Asphalt Pavement	May 2012
321313	Concrete Pavement	May 2012
321314	Rolling	May 2012
321373	Joint Sealant	May 2012
321400	Concrete Pavers	May 2012
321613	Concrete Curb and Gutter	May 2012
321645	Driveway Approach	May 2012
321650	Reinforced Concrete Sidewalk	May 2012
321655	Barrier Free Ramp	May 2012
321660	Concrete Median Nose	May 2012
321665	Reinforced Concrete Header	May 2012
321723	Pavement Markers and Markings	May 2012
321725	Prefabricated Pavement Marking (with Warranty)	May 2012
328000	Irrigation System	May 2012
329113	Fertilizer	May 2012
329119	Topsoil	May 2012
329223	Turfgrass Planting	May 2012
329300	Tree, Shrub, and Groundcover Planting	May 2012
329600	Removal, Protection and Replacement of Trees, Shrubbery, Plants, Sod and Other Vegetation	May 2012

DIVISION 33 - Utilities

330131	Wastewater and Manhole Testing	May 2012
330132	Television Inspection for Wastewater Mains	May 2012
330510	Trenching, Backfilling and Compaction	May 2012
330523	Trenchless Utility Installation	May 2012
331113	Ductile Iron Pipe and Fitting	May 2012
331114	PVC Pipe for Water Distribution	May 2012
331213	Water Service Connections	May 2012
331216	Air Valves for Potable Water Systems and Wastewater Force Mains	May 2012
331217	Resilient Seated Gate Valves	May 2012
331218	Butterfly Valves	May 2012
331219	Fire Hydrants	May 2012
331240	Polyethylene Encasement	May 2012
331245	Tapping Sleeves for PVC and Ductile Iron Pipe	May 2012
331260	Mechanical Restraint for PVC and Ductile Iron Pipe	May 2012
333109	Wastewater Lateral Connections	May 2012
333110	PVC Pipe for Gravity Wastewater Mains	May 2012
333115	Pressure Rated PVC Pipe for Gravity Wastewater Mains	May 2012
333130	Centrifugally Cast Fiberglass Reinforced Pipe for Gravity Wastewater Mains	May 2012
333913	Wastewater Manhole Frames and Covers	May 2012
333914	Cast-in-Place Concrete Manholes	May 2012
333915	Precast Concrete Manholes	May 2012
333916	Fiberglass Manholes	May 2012
334113	Reinforced Concrete Pipe	May 2012
334200	Reinforced Box Culvert	May 2012
334913	Storm Sewer Manhole	May 2012

334914	Headwalls and Wingwalls	May 2012
334915	Safety End Treatment	May 2012
334920	Standard and Recessed Curb Inlets and Other Inlets	May 2012

DIVISION 34 - Transportation

344113	Installation of Highway Traffic Signal	May 2012
344125	Vehicle and Pedestrian Signal Heads	May 2012
344130	Traffic Signal Cable	May 2012
344135	Ground Box	May 2012
344140	Temporary Traffic Signal	May 2012
344150	Small Roadside Sign Supports and Assemblies	May 2012
347113	Barricades, Signs, and Traffic Handling	May 2012

SECTION 015813

PROJECT SIGN

PART 1 - GENERAL

1.01 DESCRIPTION

A. All material, labor, equipment, tools and superintendence necessary to furnish, install, and maintain Project Sign.

1.02 REFERENCES

A. City of Frisco Standard Detail for Project Sign.

PART 2 - PRODUCTS

A. Contractor may contact Southwest Signs & Graphics, Frisco, Texas at (972) 335-0234 or other City approved manufacturer.

PART 3 - EXECUTION

3.01 INSTALLATION

A. The Contractor shall coordinate with the City regarding the location prior to installation. The City shall provide on-site inspection of the installation.

PART 4 - MEASUREMENT AND PAYMENT

4.01 MEASUREMENT

A. This Item will be measured on a per Each (EA) basis.

4.02 PAYMENT

A. All work performed and materials furnished in accordance with this Item and measured as provided under MEASUREMENT will be paid for at the unit bid price for "Project Sign" in accordance with the City of Frisco's Standard Detail for Project Sign. This price is full compensation for all material, labor, equipment, tools and superintendence necessary to furnish and install Project Sign.

END OF SECTION

SECTION 017113

MOBILIZATION

PART 1 - GENERAL

1.01 DESCRIPTION

The work under this section of the specification shall include the establishment of offices and other facilities on the project site and the movement of personnel, construction equipment, and supplies to the project site or to the vicinity of the project site to enable the Contractor to begin work on the other contract items that will be performed by the Contractor. This Item also includes all costs associated with bonding and insurance.

PART 2 - PRODUCTS

Not used.

PART 3 - EXECUTION

Not used.

PART 4 - MEASUREMENT AND PAYMENT

4.01 MEASUREMENT

A. This Item will be measured on a Lump Sum (LS) basis as the work progresses.

B. The maximum bid amount for this Item shall be 5% of the total amount bid for the project.

4.02 PAYMENT

Partial payments of the bid for Mobilization will be as follows. The adjusted contract amount for construction items as used below is defined as the total contract amount less the bid for Mobilization.

A. When 1% of the adjusted contract amount for construction items is earned, 50% of the mobilization lump sum bid will be paid. Previous payments under this Item will be deducted from this amount.

B. When 5% of the adjusted contract amount for construction items is earned, 75% of the mobilization lump sum bid will be paid. Previous payments under this Item will be deducted from this amount.

C. When 10% of the adjusted contract amount for construction items is earned, 90% of the mobilization lump sum bid will be paid. Previous payments under this Item will be deducted from this amount.

D. When 50% of the adjusted contract amount for construction items is earned, 100% of the mobilization lump sum bid will be paid. Previous payments under this Item will be deducted from this amount..

END OF SECTION

SECTION 017416

DUST CONTROL

PART 1 - GENERAL

1.01 DESCRIPTION

A. All material, labor, equipment, tools and superintendence necessary for Dust Control in accordance with *Public Works Construction Standards*, NCTCOG, 4th Edition, Item 203.8.

1.02 REFERENCES

A. *Public Works Construction Standards*, NCTCOG, 4th Edition, Item 203.8

PART 2 - PRODUCTS

2.01 MATERIALS

A. Refer to *Public Works Construction Standards*, NCTCOG, 4th Edition, Item 203.8.

PART 3 - EXECUTION

3.01 INSTALLATION

A. Refer to *Public Works Construction Standards*, NCTCOG, 4th Edition, Item 203.8.

PART 4 - MEASUREMENT AND PAYMENT

4.01 MEASUREMENT

A. This Item shall not be measured as a separate contract Item.

4.02 PAYMENT

A. The work performed and materials furnished in accordance with this Item will not be paid for directly but will be subsidiary to pertinent Items.

END OF SECTION

SECTION 024100

GENERAL SITE PREPARATION

PART 1 - GENERAL

1.01 DESCRIPTION

A. All materials, labor, equipment, tools and superintendence necessary for the preparation of the project site not covered elsewhere in accordance with *Public Works Construction Standards*, NCTCOG, 4th Edition, Item 203.

B. This Section also includes:

1. Protecting existing vegetation to remain.
2. Removing existing vegetation.
3. Clearing and grubbing
4. Demolition
5. Removal of all items within the limits of construction not specifically noted to remain.

1.01 REFERENCES

A. *Public Works Construction Standards*, NCTCOG, 4th Edition, Items 203.1, 203.2, and 203.3

1.02 PROJECT CONDITIONS

A. Traffic: Minimize interference with adjoining roads, streets, walks, and other adjacent occupied or used facilities during site-clearing operations.

1. Do not close or obstruct streets, walks, or other adjacent occupied or used facilities without permission from City and authorities having jurisdiction.
2. Provide alternate routes around closed or obstructed traffic ways if required by Owner or authorities having jurisdiction.

B. Salvaged materials: Carefully remove items indicated to be salvaged and store as directed by the City.

C. Utility Locator Service: Notify utility locator service for area where Project is located before site clearing.
1. Call DigTESS at 1-800-344-8377
2. Contact City's ROW Division of Public Works at 972-292-5820 for locates

D. Do not commence site clearing operations until temporary erosion and sedimentation control measures are in place.

PART 2 – PRODUCTS

Not used

PART 3 - EXECUTION

3.01 PREPARATION

A. Refer to *Public Works Construction Standards*, NCTCOG, 4th Edition, Item 203.1, 203.2 and 203.3.

PART 4 - MEASUREMENT AND PAYMENT

4.01 MEASUREMENT

A. This Item shall be measured on a Lump Sum (LS) basis, unless indicated otherwise and shall include the removal of all items within the limits of construction not specifically called out to remain.

B. Removal of existing pavement will be measured separately and paid for by the square yard (SY), regardless of thickness and type. Concrete curb and gutter removal will not be measured separately and is considered subsidiary to this item.

C. Removal of existing sidewalk and ramps will be measured separately and paid for by the square yard (SY), regardless of thickness and type.

D. Removal of existing inlets, headwalls, manholes, etc. will be measured separately and paid for per each (EA) inlet removed, regardless of the size of the existing inlet. Removal of existing pipe will not be measured separately and is considered subsidiary to this item.

4.02 PAYMENT

A. All work performed and materials furnished in accordance with this Item will be paid for at the unit bid price. This price is full compensation for all material, labor, equipment, tools and superintendence necessary to complete the work.

END OF SECTION

SECTION 032100

REINFORCING STEEL

PART 1 - GENERAL

1.01 DESCRIPTION

A. All material, labor, equipment, tools and superintendence necessary to furnish and install Reinforcing Steel in accordance with *Public Works Construction Standards*, NCTCOG, 4th Edition, Item 303.2.9.

1.02 REFERENCES

A. *Public Works Construction Standards*, NCTCOG, 4th Edition, Item 303.2.9 and 303.2.11.

1.03 RELATED SECTIONS

A. Section 321313 – Concrete Pavement

PART 2 - PRODUCTS

2.01 MATERIALS

A. Refer to *Public Works Construction Standards*, NCTCOG, 4th Edition, Item 303.2.9 and 303.2.11.

B. Specified reinforcing steel (#4 bars and larger) shall conform to the requirements of ASTM A615, Grade 60.

C. Grade 40 reinforcing steel (#3 bars) will only be allowed in sidewalks or with approval of the Director of Engineering Services.

PART 3 - EXECUTION

3.01 PREPARATION

A. Refer to *Public Works Construction Standards*, NCTCOG, 4th Edition, Item 303.2.9 and 303.2.11.

PART 4 - MEASUREMENT AND PAYMENT

4.01 MEASUREMENT

A. This Item will not be measured separately.

4.02 PAYMENT

A. This Item will not be paid separately, but considered subsidiary to pertinent Items.

END OF SECTION

SECTION 032200

WELDED WIRE FABRIC

PART 1 - GENERAL

1.01 DESCRIPTION

A. All material, labor, equipment, tools and superintendence necessary to furnish and install Welded Wire Fabric in accordance with *Public Works Construction Standards*, NCTCOG, 4th Edition, Item 303.2.10.

1.02 REFERENCES

A. *Public Works Construction Standards*, NCTCOG, 4th Edition, Item 303.2.10 and 303.2.11.

1.03 RELATED SECTIONS

A. Section 313700 – Riprap

PART 2 - PRODUCTS

2.01 MATERIALS

A. Refer to *Public Works Construction Standards*, NCTCOG, 4th Edition, Item 303.2.10.

PART 3 - EXECUTION

3.01 PREPARATION

A. Refer to *Public Works Construction Standards*, NCTCOG, 4th Edition, Item 303.2.10 and 303.2.11.

B. Welded Wire Fabric is acceptable as reinforcement for concrete riprap of bridge abutments only.

PART 4 - MEASUREMENT AND PAYMENT

4.01 MEASUREMENT

A. This Item will not be measured separately.

4.02 PAYMENT

A. This Item will not be paid separately, but considered subsidiary to pertinent Items.

END OF SECTION

SECTION 033100

CONCRETE STRUCTURES – CAST-IN-PLACE (CITY)

PART 1 - GENERAL

1.01 DESCRIPTION

A. All material, labor, equipment, tools and superintendence necessary to furnish and install Concrete Structures – Cast-in-Place (City) in accordance with *Public Works Construction Standards*, NCTCOG, 4th Edition, Item 702.

1.02 REFERENCES

A. *Public Works Construction Standards*, NCTCOG, 4th Edition, Items 701.2 and 702

PART 2 - PRODUCTS

2.01 MATERIALS

A. Refer to *Public Works Construction Standards*, NCTCOG, 4th Edition, Items 303.2 and 303.3.

B. Refer to *Public Works Construction Standards*, NCTCOG, 4th Edition, Items 701.2 and 702.

C. All concrete shall be sulfate resistant mixes. Mix Design must be submitted and approved by the City at least 7 days prior to scheduled pour. The Contractor will be required to provide tickets for all concrete drivers.

D. *Public Works Construction Standards*, NCTCOG, 4th Edition, Items 303.2.2 is hereby modified to allow only Type I/II Portland Cement.

E. *Public Works Construction Standards*, NCTCOG, 4th Edition, Items 303.2.4 is hereby modified to allow only Class F flyash.

F. Provide Class F or Class M concrete.

PART 3 - EXECUTION

3.01 PREPARATION

A. Refer to *Public Works Construction Standards*, NCTCOG, 4th Edition, Items 701.2 and 702.

PART 4 –MEASUREMENT AND PAYMENT

4.01 MEASUREMENT AND PAYMENT

A. Measurement and Payment shall be specified in the Contract Documents.

END OF SECTION

SECTION 033101

DRILLED SHAFT FOUNDATION

PART 1 - GENERAL

1.01 DESCRIPTION

A. All material, labor, equipment, tools and superintendence necessary to furnish and install Drilled Shaft Foundations (including Traffic Signal Poles or Street Light Poles).

1.02 REFERENCES

A. TxDOT Items 416, 420, 421, 440, and 448

B. TxDOT Standard Details included in the plans.

C. Traffic Signal and/or Street Lighting Plans.

1.03 RELATED SECTIONS

A. Section 344113 – Installation of Highway Traffic Signal.

B. Section 265619 – Luminaire Pole

PART 2 - PRODUCTS

2.01 MATERIALS

A. Refer to TxDOT Item 416.

B. Type A concrete shall be used for non-reinforced foundations. Type C concrete shall be used for reinforced foundations.

C. All concrete shall be sulfate resistant mixes. Mix design must be submitted and approved by the City at least 7 days prior to scheduled pour. The Contractor will be required to provide tickets for all concrete deliveries.

PART 3 - EXECUTION

3.01 INSTALLATION

A. Refer to TxDOT Item 416.

B. A 3/4 inch chamfer (beveled) shall be formed on the top edge of each pole foundation.

C. The Contractor shall probe before drilling foundations to determine the location of utilities and structures. F oundations shall be paid for once regardless of extra work caused by obstructions. Foundations shall not be placed within 3-feet of a water line or fire hydrant and must be a minimum of 25-feet from all tree trunks unless otherwise directed by the City. If any City or any other water utility is near a proposed pole foundation (within 3 feet), then the Contractor will hand dig to uncover the water line and verify that the proposed pole

foundation location is satisfactory. The Contractor shall be liable for all damages done, and restoration to utilities as a result of their operations.

D. Contractor shall contact the City for inspection prior to pouring any concrete foundation and digging for conduit runs at least 48 hours in advance (between 8 am – 5pm).

E. No poles shall be placed on foundations prior to 7 days following pouring of concrete.

F. Contractor shall clean up and remove all loose material resulting from construction operations.

G. Top of foundation shall be 3 inches above the finished grade unless otherwise shown on the plans and shall be formed or provided a smooth finish satisfactory to the City. Foundation piers shall be drilled plum, the top of foundation poured level, and the top 3 inches of the exposed foundation above finished grade shall have the sonotube removed.

H. Anchor bolts shall extend above the top of the foundation concrete as shown on anchor bolt detail. Refer to manufacturer's specifications for bolt circle dimensions and anchor bolt specifications.

I. Anchor bolts, ground rod, all reinforcing and conduit shall be in place before pouring concrete pier foundations. Foundations shall have one continuous concrete pour.

J. Contractor shall keep a record set of plans and mark any differences between the locations shown in the plans and the as-built locations. This record set shall be provided to the City time of acceptance of the work.

PART 4 - MEASUREMENT AND PAYMENT

4.01 MEASUREMENT

A. Refer to TxDOT Item 416.

4.02 PAYMENT

A. Refer to TxDOT Item 416.

B. Foundations shall be paid for once regardless of extra work caused by obstructions.

END OF SECTION

SECTION 033105

CONCRETE STRUCTURES – CAST-IN-PLACE (TxDOT)

PART 1 - GENERAL

1.01 DESCRIPTION

A. All material, labor, equipment, tools and superintendence necessary to furnish and install Concrete Structures - Cast-In-Place (TxDOT) in accordance with Texas Department of Transportation *Standard Specifications for Construction and Maintenance of Highways, Streets, and Bridges* Item 420.

1.02 REFERENCES

A. TxDOT Item 420

B. TxDOT and City Standard details, included in the plans.

PART 2 - PRODUCTS

2.01 MATERIALS

A. Refer to TxDOT 420.2.

B. All concrete shall be sulfate resistant mixes. Mix design must be submitted and approved by the City at least 7 days prior to scheduled pour. The Contractor will be required to provide tickets for all concrete deliveries.

PART 3 - EXECUTION

3.01 PREPARATION

A. Refer to TxDOT 420.3 and 420.4.

PART 4 - MEASUREMENT AND PAYMENT

4.01 MEASUREMENT

A. Refer to TxDOT 420.5 or as indicated in the Contract Documents.

4.02 PAYMENT

A. Refer to TxDOT 420.6 or as indicated in the Contract Documents.

END OF SECTION

SECTION 033106

CONCRETE RETAINING WALLS (TxDOT)

PART 1 - GENERAL

1.01 DESCRIPTION

A. All material, labor, equipment, tools and superintendence necessary to furnish and install Concrete Retaining Walls (TxDOT) in accordance with Texas Department of Transportation *Standard Specifications for Construction and Maintenance of Highways, Streets, and Bridges* Item 423.

1.02 REFERENCES

A. TxDOT Item 423

B. TxDOT Standard Details included in the plans.

PART 2 - PRODUCTS

2.01 MATERIALS

A. Refer to TxDOT 423.

PART 3 - EXECUTION

3.01 PREPARATION

A. Refer to TxDOT 423.

PART 4 - MEASUREMENT AND PAYMENT

4.01 MEASUREMENT

A. Refer to TxDOT 423 or as indicated in the Contract Documents.

4.02 PAYMENT

A. Refer to TxDOT 423 or as indicated in the Contract Documents.

END OF SECTION

SECTION 034100

CONCRETE STRUCTURES – PRECAST (CITY)

PART 1 - GENERAL

1.01 DESCRIPTION

A. All material, labor, equipment, tools and superintendence necessary to furnish and install Concrete Structures – Precast (City) in accordance with *Public Works Construction Standards*, NCTCOG, 4th Edition, Item 702.

1.02 REFERENCES

A. *Public Works Construction Standards*, NCTCOG, 4th Edition, Items 701.2 and 702

PART 2 - PRODUCTS

2.01 MATERIALS

A. Refer to *Public Works Construction Standards*, NCTCOG, 4th Edition, Items 701.2 and 702.

B. All concrete shall be sulfate resistant.

C. Provide Class F or Class M concrete.

PART 3 - EXECUTION

3.01 PREPARATION

A. Refer to *Public Works Construction Standards*, NCTCOG, 4th Edition, Items 701.2 and 702.

PART 4 –MEASUREMENT AND PAYMENT

4.01 MEASUREMENT AND PAYMENT

A. Measurement and Payment shall be specified in the Contract Documents.

END OF SECTION

SECTION 034105

CONCRETE STRUCTURES – PRECAST (TxDOT)

PART 1 - GENERAL

1.01 DESCRIPTION

A. All material, labor, equipment, tools and superintendence necessary to furnish and install Concrete Structures – Precast (TxDOT) in accordance with Texas Department of Transportation *Standard Specifications for Construction and Maintenance of Highways, Streets, and Bridges* Item 424.

1.02 REFERENCES

A. TxDOT Item 424

B. TxDOT Item 425

C. TxDOT Standard Details included in the plans.

PART 2 - PRODUCTS

2.01 MATERIALS

A. Refer to TxDOT Item 424.

PART 3 - EXECUTION

3.01 PREPARATION

A. Refer to TxDOT Item 424.

PART 4 - MEASUREMENT AND PAYMENT

4.01 MEASUREMENT

A. Refer to TxDOT Item 424 or as indicated in the Contract Documents.

4.02 PAYMENT

A. Refer to TxDOT Item 424 or as indicated in the Contract Documents.

END OF SECTION

SECTION 071300

MOISTURE BARRIER

PART 1 - GENERAL

1.01 DESCRIPTION

A. All material, labor, equipment, tools and superintendence necessary to furnish and install Moisture Barrier.

1.02 REFERENCES

A. Project's Subgrade Investigation and Pavement Design Report (if available).

1.03 RELATED SECTIONS

A. Section 321112 - Moisture Treated Subgrade

PART 2 - PRODUCTS

2.01 MATERIALS

A. The moisture barrier shall consist of a minimum 10 mil polyethylene sheeting. Covered with at minimum 8 inches of lightly compacted soil.

PART 3 - EXECUTION

3.01 INSTALLATION

A. The moisture barrier shall be placed horizontally on the treated subgrade from the edge of pavement extending a minimum 6 feet on either side of the pavement in a neat line after final compaction unless indicated otherwise on the plans.

B. The barrier shall be covered with at least 8 inches of lightly compacted soil. Care should be taken not to rip or tear the poly sheeting during placement of the cover fill.

PART 4 - MEASUREMENT AND PAYMENT

4.01 MEASUREMENT

A. This Item shall be measured on a Square Yard (SY) basis.

4.02 PAYMENT

A. All work performed and materials furnished in accordance with this Item will be paid for at the unit bid price for "Moisture Barrier." This price is full compensation for all material, labor, equipment, tools and superintendence necessary to complete the work.

B. Payment for the 8 inches of lightly compacted soil shall be considered subsidiary to the "Moisture Barrier" Item.

END OF SECTION

SECTION 260500

ELECTRIC CONDUCTOR

PART 1 - GENERAL

1.01 DESCRIPTION

A. All material, labor, equipment, tools and superintendence necessary to furnish and install Electric Conductors for Traffic Signals and/or Street Lighting.

1.02 REFERENCES

A. TxDOT Item 620

B. TxDOT Standard Details included in the plans.

C. Traffic Signal Plans and/or Street Lighting Plans.

1.03 RELATED SECTIONS

A. Section 344113 – Installation of Highway Traffic Signal

B. Section 270500 – Conduit

PART 2 - PRODUCTS

2.01 MATERIALS

A. Refer to TxDOT Item 620.

B. All electrical connectors for breakaway poles shall be breakaway (BUSSMAN HEBW, LITTLEFUSE LEB, FERRAZ-SHAWMUT FEB, HMC FLOOD-SEAL SLK-MD or approved equal) in accordance with the latest TxDOT RID standards. All electrical connections for neutrals shall be breakaway and shall have a white colored marking and a permanently installed solid neutral (BUSSMAN HET, LITTLEFUSE LET, FERRAZ-SHAWMUT FEBN, HMC FLOOD-SEAL SDK-MD or approved equal).

C. A continuous bare or green insulated copper wire No.6 or larger shall be installed in every conduit throughout the electrical and the traffic signals system in accordance with TxDOT Item 680, the electrical details, and the current edition of the National Electrical Code. This bare or green insulated copper wire shall be stranded for this project.

PART 3 - EXECUTION

3.01 INSTALLATION

A. Refer to TxDOT Item 620.

B. Where two or more conductors are present in one conduit or enclosure, the conductors shall be identified as shown in the electrical details. If the identification tag with two plastic straps is too large for the referenced conductors, a tag with a single plastic strap may be used if

approved by the city. In any case, each tag shall indicate circuit number, letter, or other identification as shown in the plans.

C. Grounding conductors that share the same conduit, junction box, ground box or structure shall be bonded together at every accessible point in accordance with the current edition of the National Electric Code.

D. Electrical work performed by non-certified persons is not in accordance with the requirements of the contract and may be rejected as u nsuitable for use due to poor workmanship. The required electrical certification course is available and is scheduled periodically by TEEX. Alternatively, the Contractor may purchase an entire course for their personnel to be held at a time and location of their choice as negotiated through TEEX. For more information, contact: TEXAS ENGINEERING EXTENSION SERVICE (TEEX), TxDOT ELECTRICAL SYSTEM COURSE, (979) 845-6563

PART 4 - MEASUREMENT AND PAYMENT

4.01 MEASUREMENT

A. This Item shall be measured on a Linear Foot (LF) basis for each single conductor, complete in place. The length is the straight line distance between the ground boxes, foundations, or pads.

4.02 PAYMENT

A. All work performed and materials furnished in accordance with this Item will be paid for at the unit bid price for “Electric Conductor.” This price is full compensation for all material, labor, equipment, tools and superintendence necessary to complete the work.

B. This is a plans quantity measurement Item. The quantity to be paid is the quantity shown in the Bid Form.

END OF SECTION

SECTION 260501

ELECTRICAL SERVICE

PART 1 - GENERAL

1.01 DESCRIPTION

A. All electrical service conductors, labor, equipment, tools and superintendence necessary to furnish and install Electric Service.

1.02 REFERENCES

A. TxDOT Items 620 and 628

B. TxDOT Standard Details included in the plans.

C. Traffic Signal Plans and/or Street Lighting Plans.

D. Irrigation Plans.

PART 2 - PRODUCTS

2.01 MATERIALS

A. Refer to TxDOT Items 620 and 628.

B. The electrical service enclosure shall have a powder-coated paint finish of RAL9017 (TRAFFIC BLACK) or City approved equal to match the color of the traffic signal pole assemblies.

C. Electrical Service for Traffic Signals will be provided by the City. Contractor shall provide and install electrical services for Street Lighting and Irrigation.

PART 3 - EXECUTION

3.01 INSTALLATION

A. All enclosure-mounted components shall be installed in the main service enclosure including all lighting components and the main disconnect as required by the plans. The main disconnect shall not be accessible from outside the main service enclosure.

B. All neutral wire shall be white insulated wire only.

C. The address for electrical service shall be obtained from the City of Frisco. The electrical service for this project shall be billed in the name of City of Frisco.

D. If the Contractor is required to provide the service, the Contractor shall submit for approval four (4) copies of catalog cut sheets for each of the following items: Electrical Service Enclosure, Breakers, Lighting Contractor, Fuses, Terminal Blocks, Photocell and Socket, and Lighting Arrestor.

E. The service enclosure shall be manufactured in a UL listed shop. It shall have a continuous piano hinge with stainless steel pin along the side. An enclosure with the hinge along the top of the box will not be acceptable. Service enclosures shall have no more than two (2) pieces of dead front trim. All conduits entering the service enclosure shall be through the bottom of the services enclosure.

F. For traffic signal installations with luminaries and illuminated street name signs (ILSN), separate photocell and lighting contactor will be required for luminaries and ILSN (Total two photocells and two lighting contactor).

G. Install in line fuses at all service connections.

PART 4 - MEASUREMENT AND PAYMENT

4.01 MEASUREMENT

A. This Item shall be measured on a per Each (EA) electrical service installed or removed.

4.02 PAYMENT

A. All work performed and materials furnished in accordance with this Item will be paid for at the unit bid price for as provided under measurement for "Electrical Service" in accordance with TxDOT Item 628. This price is full compensation for all material, labor, equipment, tools and superintendence necessary to complete the work.

END OF SECTION

SECTION 265619

LUMINAIRE POLE

PART 1 - GENERAL

1.01 DESCRIPTION

A. All material, labor, equipment, tools and superintendence necessary to furnish and install Luminaire Poles for City of Frisco standard street lighting.

1.02 REFERENCES

A. Manufacturer's Standard Details and Specifications for Luminaire Pole.

1.03 RELATED SECTIONS

A. Section 033101 – Drilled Shaft Foundation

B. Section 265620 – Luminaire Fixture

C. Section 260500 – Electric Conductor

D. Section 260501 – Electrical Service

E. Section 344135 – Ground Box

F. Section 347113– Barricades, Signs, and Traffic Handling

1.04 SUBMITTALS

A. Manufacturer's Standard Details and Specifications.

B. The Contractor shall furnish four (4) sets of submittals of the carbon steel pole to the City. These submittals shall be approved by the City before the Contractor begins work.

C. Prior to beginning fabrication, two (2) copies of the completed material identification form shall be furnished to the City.

PART 2 - PRODUCTS

2.01 MATERIALS

A. All materials furnished by the Contractor shall be new, UL-listed, meet NEMA, NEC, AASHTO, and the Electrical Detail standard sheet requirements.

B. The lighting assembly pole shall be 29.5 feet in height. The pole shall be a round tapered 11 gauge steel shaft with hand hole. Poles shall include breakaway coupling system that includes four couplings with associated hardware and a two piece aluminum skirt with attachment hardware. The aluminum skirt finish match color and type of finish specified for the light pole. The breakaway coupling system shall conform to current AASHTO standards and shall be approved by FHWA for breakaway characteristics at impact speeds for 20 to 60 mph.

C. The assembly will contain either one or two bracket arms. The bracket arm shall be 4 foot in length, have a 2 3/8 inch OD and have a 21 inch upsweep. Finish color and finish type shall match that specified for the light pole.

D. Luminaire Poles shall be either one of the following types:

1. Valmont Industries, Inc. Twin Arm Catalog No. DS30-750A290-4D-FP with 30"x96" concrete pier.

2. KW RTSU30-7.5-11-BLK-24S- BSC-1.0-SKT-NC

E. All Luminaire Poles shall have a powder-coated paint finish of RAL9017 (TRAFFIC BLACK) unless otherwise directed by the City. All assemblies shall be hot dipped galvanized to ASTM 123 and 153 specifications. Once galvanizing is completed, all exposed surfaces shall be mechanically etched by blast cleaning to remove mill scale, impurities and non-metallic foreign materials. All surfaces visually exposed are to be coated with a Urethane or Triglycidyl (TGIC) Polyester Powder to a minimum film thickness of 2.0 mils. The coating shall be electrostatically applied and cured in a gas fired convention oven by heating the steel substrate between 350 and 400 degrees Fahrenheit.

PART 3 - EXECUTION

3.01 PREPARATION

A. The Contractor shall notify the Traffic Department (Tracy Nichols) at least 7 business days prior to any work on this project and provide a construction schedule with weekly progress reports.

B. The Contractor shall clean up and remove all loose material resulting from construction operations.

C. All electrical work shall be in accordance with the most current National Electrical Code, City and TxDOT specifications and standards.

D. The Contractor shall coordinate electrical services with the City of Frisco and either ONCOR or COSERV representatives (according to their respective area).

E. Proposed street light pole foundations shall be staked by the Contractor and approved by the City prior to installation.

F. Erection of poles, luminaries and structures located near any overhead or underground utilities shall be accomplished using established industry and utility safety practices. The Contractor shall consult with the appropriate utility company and TxDOT prior to beginning such work.

G. All shop drawings, working drawings or other documents which require review by the City and shall be submitted by the Contractor sufficiently in advance of scheduled construction to allow no less than 14 calendar days for review and response by the City.

H. If any overhead or underground power lines need to be de-energized, the Contractor shall call the electric company to do this work. Any cost associated with de-energizing the power line and/or any other protective measures required shall be at the Contractor's expense.

I. All lighting poles, fixtures, and arms which are removed with this project shall be delivered to the City of Frisco Public Works facility (11300 Research Road, Frisco, Texas 75034) by the Contractor and will remain the property of the City of Frisco.

J. Texas State Law, Article 1436C, makes unlawful the operation of equipment or machines within 10-feet of any overhead electrical lines under danger against contact with high voltage overhead lines has been effectively guarded against pursuant to the provisions of the article. When construction operations require working near an overhead electrical line, the Contractor shall contact the owner/operator of the overhead electrical line to make adequate arrangements and to take necessary safety precautions to ensure that all laws, electrical line owner/operator requirements and standard industry safety practices are met.

K. All materials and construction methods shall be in accordance with the details shown on the plans, the requirements of this Item and the pertinent requirements of the following items:

a. TxDOT Item 616 "Performance Testing of Lighting Systems"
b. TxDOT Item 620 "Electrical Conductors"

PART 4 - MEASUREMENT AND PAYMENT

4.01 MEASUREMENT

A. This Item shall be measured on a per Each (EA) basis, complete in place.

4.02 PAYMENT

A. All work performed and materials furnished in accordance with this Item will be paid for at the unit bid price for "Luminaire Pole." This price is full compensation for all material, labor, equipment, tools and superintendence necessary to complete the work.

B. Foundations shall be paid for once regardless of extra work caused by obstructions.

END OF SECTION

SECTION 265620

LUMINAIRE FIXTURE

PART 1 - GENERAL

1.01 DESCRIPTION

A. All material, labor, equipment, tools and superintendence necessary to furnish and install Luminaire Fixtures for City of Frisco standard street lighting.

1.02 REFERENCES

A. Manufacturer's Standard Details and Specifications for Luminaire Fixture.

1.03 RELATED SECTIONS

A. Section 265619 – Luminaire Pole

B. Section 033101 – Drilled Shaft Foundation

C. Section 347113 – Barricades, Signs, and Traffic Handling

D. Section 260500 – Electric Conductor

E. Section 344135 – Ground Box

F. Section 260501 – Electrical Service

1.04 SUBMITTALS

A. Manufacturer's Standard Details and Specifications.

B. The Contractor shall furnish four (4) sets of submittals of the aluminum decorative fixture to the City. These submittals shall be approved by the City before the Contractor begins work.

C. Prior to beginning fabrication, two (2) copies of the completed material identification form shall be furnished to the City.

PART 2 - PRODUCTS

2.01 MATERIALS

A. All materials furnished by the Contractor shall be new, UL-listed, meet NEMA, NEC, AASHTO, and the Electrical Detail standard sheet requirements.

B. Contractor shall provide luminaire fixtures. The luminaire fixture shall be a Hadco Profiler PA31 Series or Kim Archetype AR Series or approved equal and operate at 480 v olts. Luminaire optics will produce an IESNA cutoff light distribution type as noted on the plans. Luminaire shall be 8 inches high by 33.75 inches in width with a housing made of low-copper die-cast aluminum alloy. Luminaire shall be able to mount on 2 3/8 inch OD bracket arm. Finish shall be electrostatically applied thermoset polyester powdercoat color Traffic Black (RAL9017).

C. Contractor shall provide luminaire fixtures. Unless otherwise noted in the plans, luminaire fixtures shall be either:

1. KIM Lighting Catalog No. *2B/ARX/250PMH480/BL-P/HSF*
2. HADCO C1210D LUMINAIRE (BLACK, TYPE X, 250W PMH, 480V)

D. Covers for the luminaire fixtures shall be a clear flat-glass insert.

E. The ballast shall be core and coil pulse start metal halide designed to operate 250 watt pulse start metal halide lamps with 480 line volts.

PART 3 - EXECUTION

3.01 PREPARATION

A. Refer to City of Frisco's General Notes for Traffic Signals and Street Lighting.

B. All materials and construction methods shall be in accordance with the details shown on the plans, the requirements of this Item and the pertinent requirements of the following items:

a. TxDOT Item 616 "Performance Testing of Lighting Systems"
b. TxDOT Item 620 "Electrical Conductors"

PART 4 - MEASUREMENT AND PAYMENT

4.01 MEASUREMENT

A. This Item shall be measured on a per Each (EA) basis, complete in place.

4.02 PAYMENT

A. All work performed and materials furnished in accordance with this Item will be paid for at the unit bid price for "Luminaire Fixture." This price is full compensation for all material, labor, equipment, tools and superintendence necessary to complete the work.

END OF SECTION

SECTION 270500

CONDUIT

PART 1 - GENERAL

1.01 DESCRIPTION

A. All material, labor, equipment, tools and superintendence necessary to furnish and install Conduit for Traffic Signals, Street Lighting, or Irrigation.

1.02 REFERENCES

A. TxDOT Item 618

B. TxDOT Standard Details included in the plans.

C. Traffic Signal Plans and/or Street Lighting Plans.

D. Irrigation Plans.

1.03 RELATED SECTIONS

A. Section 344113 – Installation of Highway Traffic Signals

B. Section 260500 – Electric Conductor

PART 2 - PRODUCTS

2.01 MATERIALS

A. Refer to TxDOT Item 618.

B. All conduit underground for signals and street lighting shall be Schedule 40 white PVC unless indicated otherwise. Conduit size shall be as shown in the plans.

C. Conduit above ground shall be 2 inch rigid metal, unless otherwise directed by the City. Conduit size shall be as shown in the plans.

PART 3 - EXECUTION

3.01 INSTALLATION

A. Contractor shall secure permission from the proper authority and the approval of the City prior to cutting into or removing any sidewalks or curbs, which may be required for installation.

B. The locations of conduit and ground boxes are diagrammatic only and may be shifted with City approval to accommodate field conditions.

C. A colored cleaner primer shall be used on all PVC to PVC joints before application of PVC cement.

D. Conduit shall be placed under existing pavement by an approved boring method unless otherwise directed by the City. Pits for boring shall not be closer than 2 feet from the edge of the pavement unless otherwise directed by the City.

E. Water jetting will not be permitted.

F. When boring is used under pavement conduit installations, the maximum allowable over-cut shall be 1 inch in diameter.

G. When conduits are bored, the vertical and horizontal tolerances shall not exceed 18" as measured from the intended target point.

H. All conduit shall be installed at a minimum depth of 36" below grade measured from the bottom of the concrete slab.

I. The use of pneumatically driven device for punching holes beneath the pavement (commonly known as a "missile") will not be permitted.

J. The Contractor shall install a non-metallic pull rope in conduit runs in excess of 50 feet.

K. When rigid metal conduit is exposed at any point and where rigid metal conduit extends into ground boxes, the metal conduit shall be bonded to the grounding conductor with grounding type bushings or by other UL listed grounding connectors approved by the City.

L. PVC conduit systems that snap or lock together without glue that are designed and UL listed to be used for bored PVC electrical conduit applications will be allowed for bored PVC schedule 40. No additional compensation will be paid to the Contractor when these specific purpose conduit systems are substituted for this purpose.

M. Liquid-tight flexible metal (LTFM) conduit shall be used where the plans refer to flexible metal conduit. Flexible metal shall not be permitted.

N. Contractor shall place duct seal at the ends of all conduits where conductors and/or cables are present with a permanently soft, non-toxic duct seal that does not adversely affect other plastic materials or corrode metals.

O. The conduit shall be installed in a trench free of rocks that would damage the conduit and first 2 inches of backfill shall be free of rock.

P. All conduit shall start and end in a ground box, foundation, or at a transformer pad along with a 1/4 inch polyline (pullstring) with a break strength of 500 pounds or greater.

Q. Each change of direction in the conduit run requires a ground box (pull box) unless it is less than 20 feet to the end of the run or unless otherwise directed by the City.

R. Conduit shall be placed within an easement or street ROW. When placed in easements, the location of the conduit shall be 30 inches off the lot lines to avoid being damaged by fence post placement.

PART 4 - MEASUREMENT AND PAYMENT

4.01 MEASUREMENT

A. This Item shall be measured on a Linear Foot (LF) basis for each Conduit type and size, complete in place. The length is the straight line distance between the ground boxes, foundations, or pads.

B. The plan quantity will be determined through calculations and will be used for determining final quantity amounts for payment purposes. Contract adjustments may be made if the actual measured quantity varies by more or less than 5% of the total estimated plan quantity amount. Either the City or the Contractor may initiate this adjustment. If the adjustment is requested by the Contractor, the Contractor must obtain field measurements and calculations justifying the revised quantity. If the adjustment is made by the City, the revised quantity will constitute the final quantity which payment will be made.

4.02 PAYMENT

A. All work performed and materials furnished in accordance with this Item will be paid for at the unit bid price for "Conduit," of the size and type specified. This price is full compensation for all material, labor, equipment, tools and superintendence necessary to complete the work.

B. Flexible conduit will not be paid for directly but will be subsidiary to pertinent Items.

C. Rigid metallic conduit elbows 1" and larger that are required to be installed on c onduit systems will not be paid for directly but will be subsidiary to pertinent Items.

D. This is a plans quantity measurement Item. The quantity to be paid is the quantity shown in the Bid Form.

END OF SECTION

SECTION 312316

EXCAVATION (ROADWAY)

PART 1 – GENERAL

1.01 DESCRIPTION

A. All material, labor, equipment, tools and superintendence necessary to furnish and install Excavation (Roadway) in accordance with Texas Department of Transportation *Standard Specifications for Construction and Maintenance of Highways, Streets, and Bridges* Item 110..

1.02 REFERENCES

A. TxDOT Item 110.

PART 2 - PRODUCTS

2.01 MATERIALS

A. Refer to TxDOT Item 110.2.

B. All excavation shall be unclassified, and shall include the removal of all materials encountered, regardless of their nature or the manner in which they are removed.

PART 3 - EXECUTION

3.01 PREPARATION

A. Refer to TxDOT Item 110.2

B. Frequency of compaction testing shall not exceed one test for every three hundred linear feet 300' spacing or less, alternating from left quarter point to center line to right quarter point of the cross section width.

C. For density and moisture requirements of moisture treated excavation areas see Section 32112 Moisture Treated Subgrade.

PART 4 - MEASUREMENT AND PAYMENT

4.01 MEASUREMENT

A. Refer to TxDOT Item 110.3 or as indicated in the Contract Documents.

B. The plan quantity will be determined through calculations and will be used for determining final quantity amounts for payment purposes. Contract adjustments may be made if the actual measured quantity varies by more or less than 5% of the total estimated plan quantity amount. Either the City or the Contractor may initiate this adjustment. If the adjustment is requested by the Contractor, the Contractor must obtain field measurements and calculations justifying

the revised quantity. If the adjustment is made by the City, the revised quantity will constitute the final quantity for which payment will be made.

4.02 PAYMENT

A. Refer to TxDOT Item 110.4 or as indicated in the Contract Documents.

END OF SECTION

SECTION 312317

UNCLASSIFIED CHANNEL EXCAVATION

PART 1 – GENERAL

1.01 DESCRIPTION

A. All material, labor, equipment, tools and superintendence necessary to furnish and install Unclassified Channel Excavation in accordance with *Public Works Construction Standards*, NCTCOG, 4th Edition, Item 203.5.

1.02 REFERENCES

A. *Public Works Construction Standards*, NCTCOG, 4th Edition, Item 203.5

PART 2 - PRODUCTS

2.01 MATERIALS

A. Refer to *Public Works Construction Standards*, NCTCOG, 4th Edition, Item 203.5.

B. All excavation shall be unclassified, and shall include the removal of all materials encountered, regardless of their nature or the manner in which they are removed.

PART 3 - EXECUTION

3.01 PREPARATION

A. Refer to *Public Works Construction Standards*, NCTCOG, 4th Edition, Item 203.5.

PART 4 - MEASUREMENT AND PAYMENT

4.01 MEASUREMENT

A. Refer to *Public Works Construction Standards*, NCTCOG, 4th Edition, Item 203.5.

4.02 PAYMENT

A. The plan quantity will be determined through calculations and will be used for determining final quantity amounts for payment purposes. Contract adjustments may be made if the actual measured quantity varies by more or less than 5% of the total estimated plan quantity amount. Either the City or the Contractor may initiate this adjustment. If the adjustment is requested by the Contractor, the Contractor must obtain field measurements and calculations justifying the revised quantity. If the adjustment is made by the City, the revised quantity will constitute the final quantity for which payment will be made.

END OF SECTION

SECTION 312323

SELECT FILL

PART 1 - GENERAL

1.01 DESCRIPTION

A. All material, labor, equipment, tools and superintendence necessary to install Select Fill in accordance with Texas Department of Transportation *Standard Specifications for Construction and Maintenance of Highways, Streets, and Bridges* Item 132.

1.02 REFERENCES

A. TxDOT Item 132.

PART 2 - PRODUCTS

2.01 MATERIALS

A. Refer to TxDOT Item 132.2 Type A.

B. Eagle Ford may not be imported to other areas.

PART 3 - EXECUTION

3.01 INSTALLATION

A. Refer to TxDOT Item 132.3.

PART 4 - MEASUREMENT AND PAYMENT

4.01 MEASUREMENT

A. This Item shall not be measured as a separate contract Item unless noted otherwise.

4.02 PAYMENT

A. The work performed and materials furnished in accordance with this Item will not be paid for directly but will be subsidiary to pertinent Items unless noted otherwise.

END OF SECTION

SECTION 312413

EMBANKMENT

PART 1 - GENERAL

1.01 DESCRIPTION

A. All material, labor, equipment, tools and superintendence necessary to furnish and install Embankment in accordance with Texas Department of Transportation *Standard Specifications for Construction and Maintenance of Highways, Streets, and Bridges* Item 132.

1.02 REFERENCES

A. TxDOT Item 132.

PART 2 – PRODUCTS

2.01 MATERIALS

A. Refer to TxDOT Item 132.2 and as specified in the Contract Documents.

B. Eagle Ford may not be imported to other areas.

PART 3 - EXECUTION

3.01 PREPARATION

A. Refer to TxDOT Item 132.3.

B. Frequency of compaction testing shall not exceed one test for every three hundred linear feet 300’ spacing or less ,alternating from left quarter point to center line to right quarter point for every layer of embankment.

C. For density and moisture requirements of moisture treated embankments see Section 32112 Moisture Treated Subgrade.

PART 4 - MEASUREMENT AND PAYMENT

4.01 MEASUREMENT

A. Embankment will be measured by the cubic yard. The cubic yard will be measured in its final position using the average end area methos. The volume is computed between the original ground surface or the surface upon which the embankment is to be constructed and the lines, grades, and slopes of the embankment. Shrinkage or swell factors will not be considered in determining the calculated quanitities.

B. The plan quantity will be determined through calculations and will be used for determining final quantity amounts for payment purposes. Contract adjustments may be made if the actual measured quantity varies by more or less than 5% of the total estimated plan quantity amount. Either the City or the Contractor may initiate this adjustment. If the adjustment is requested

by the Contractor, the Contractor must obtain field measurements and calculations justifying the revised quantity. If the adjustment is made by the City, the revised quantity will constitute the final quantity which payment will be made.

4.02 PAYMENT

A. The work performed and materials furnished in accordance with this Item will be measured as provided for at the unit price bid for "EMBANKMENT" of the compaction method and type specified. The price is full compensation for furnishing embankment; hauling; placing, compacting, finishing, and reworking; disposal of waste material; and equipment, labor, tools, and incidentals.

B. No separate pay for sprinkling, rolling (including proof rolling).

C. Correction of soft spots in the subgrade will be at the Contractor's expense.

END OF SECTION

SECTION 312500

TEMPORARY EROSION, SEDIMENTATION, AND WATER POLLUTION PREVENTION AND CONTROL

PART 1 – GENERAL

1.01 DESCRIPTION

A. All material, labor, equipment, tools and superintendence necessary to furnish, install, maintain and remove Temporary Erosion, Sedimentation, and Water Pollution Prevention and Control in accordance with *Public Works Construction Standards*, NCTCOG, 4th Edition, Item 201

1.02 REFERENCES

A. *Public Works Construction Standards*, NCTCOG, 4th Edition, Item 201

1.03 SUBMITTALS

A. The Contractor must provide a separate Storm Water Pollution Prevention Plan (SW3P) before the Notice to Proceed will be issued. The Erosion Control Plans included in the plans will not be considered a SW3P. The SW3P shall comply with the regulations established by the Texas Commission on Environmental Quality (TCEQ).

B. The Contractor is required to submit all appropriate forms and pay all fees, including the NOI and NOT, as well as producing and submitting all inspection reports through the duration, as required, to the TCEQ and the City. The Contractor will be responsible for submitting all required forms and fees on behalf of the City, and shall submit two (2) copies of all NOIs and proof of payment to the City prior to Notice to Proceed is issued.

PART 2 - PRODUCTS

2.01 MATERIALS

A. Refer to *Public Works Construction Standards*, NCTCOG, 4th Edition, Item 201.

B. Where existing grasses are disturbed, restoration shall consist of equal or better permanent vegetation. Provide a minimum of eight feet (8') of the appropriate seasonal seeded Curlex adjacent to all street and fire lane curbs and four feet (4') adjacent to alleys. The use of innovative products is encouraged, such as those made with composting materials, as long as they are approved by the Director of Engineering Services and permanent vegetative stabilization is established.

C. Twenty four (24") to thirty six (36") inches in width of rock riprap shall be placed along the top and sides of the ground interface with all headwalls and end sections and street, alley, and fire lane stub outs.

2.02 EQUIPMENT

A. Refer to *Public Works Construction Standards*, NCTCOG, 4th Edition, Item 201.

PART 3 - EXECUTION

3.01 INSTALLATION

A. Refer to *Public Works Construction Standards*, NCTCOG, 4th Edition, Item 201.

PART 4 - MEASUREMENT AND PAYMENT

4.01 MEASUREMENT

A. Refer to *Public Works Construction Standards*, NCTCOG, 4th Edition, Item 201.

4.02 PAYMENT

A. Refer to *Public Works Construction Standards*, NCTCOG, 4th Edition, Item 201.

B. Payment for the preparation of a Storm Water Pollution Prevention Plan shall be paid under the line item – "Storm Water Pollution Prevention Plan."

END OF SECTION

SECTION 313419

GEOTEXTILE

PART 1 - GENERAL

1.01 DESCRIPTION

A. All material, labor, equipment, tools and superintendence necessary to install Geotextile in accordance with *Public Works Construction Standards*, NCTCOG, 4th Edition, Item 301.6

1.02 REFERENCES

A. *Public Works Construction Standards*, NCTCOG, 4th Edition, Item 301.6

PART 2 - PRODUCTS

2.01 MATERIALS

A. Refer to *Public Works Construction Standards*, NCTCOG, 4th Edition, Item 301.6.

PART 3 - EXECUTION

3.01 INSTALLATION

A. Refer to *Public Works Construction Standards*, NCTCOG, 4th Edition, Item 301.6.

PART 4 - MEASUREMENT AND PAYMENT

4.01 MEASUREMENT

A. This Item shall not be measured as a separate contract Item.

4.02 PAYMENT

A. All work performed and materials furnished in accordance with this Item will be paid for at the unit bid price for "Geotextile". This price is full compensation for all material, labor, equipment, tools and superintendence necessary to complete the work.

END OF SECTION

SECTION 313600

GABIONS AND GABION MATTRESSES

PART 1 - GENERAL

1.01 DESCRIPTION

A. All material, labor, equipment, tools and superintendence necessary to furnish and install Gabions and Gabion Mattresses in accordance with Texas Department of Transportation *Standard Specifications for Construction and Maintenance of Highways, Streets, and Bridges*-Item 459.

1.02 REFERENCES

A. TxDOT Item 459

PART 2 - PRODUCTS

2.01 MATERIALS

A. Refer to TxDOT 459.2.

PART 3 - EXECUTION

3.01 PREPARATION

A. Refer to TxDOT 459.3.

PART 4 - MEASUREMENT AND PAYMENT

4.01 MEASUREMENT

A. Refer to TxDOT 459.4.

4.02 PAYMENT

A. Refer to TxDOT 459.5.

END OF SECTION

SECTION 313700

RIPRAP

PART 1 - GENERAL

1.01 DESCRIPTION

A. All material, labor, equipment, tools and superintendence necessary to furnish and install RipRap in accordance with Texas Department of Transportation *Standard Specifications for Construction and Maintenance of Highways, Streets, and Bridges*-Item 432.

1.02 REFERENCES

A. TxDOT Items 247, 420, 421, 431, 432, and 440.

B. City of Frisco's Standard Details for Storm Sewer Curbed Flume.

C. TxDOT Standard Details included in the plans.

1.03 RELATED SECTIONS

A. Section 334915 – Safety End Treatments

B. Section 312316 – Unclassified Street Excavation

PART 2 - PRODUCTS

2.01 MATERIALS

A. Refer to TxDOT 432.2. Riprap type (dry, grout, mortar) shall be specified in the plans.

PART 3 - EXECUTION

3.01 PREPARATION

A. Refer to TxDOT 432.3.

PART 4 - MEASUREMENT AND PAYMENT

4.01 MEASUREMENT

A. Refer to TxDOT 432.4. Replace the first sentence of TxDOT 432.4 with the following: "This Item shall be measured by the square yard (SY) of material complete in place."

4.02 PAYMENT

A. Refer to TxDOT 432.5.

END OF SECTION

SECTION 321112

MOISTURE TREATED SUBGRADE

PART 1 - GENERAL

1.01 DESCRIPTION

A. All material, labor, equipment, tools and superintendence necessary for the moisture treatment of the subgrade in all areas to be paved.

1.02 REFERENCES

A. Project's Subgrade Investigation and Pavement Design Report (if available).

1.03 RELATED SECTIONS

A. Section 071300 - Moisture Barrier

PART 2 - PRODUCTS

2.01 MATERIALS

A. Not used.

PART 3 - EXECUTION

3.01 PREPARATION

A. Weathered shale material encountered within 8 feet below finish subgrade shall be subexcavated to a depth of at least the depth of required moisture treatment and replaced with on-site light brown or dark brown clays or other approved material.

B. Moisture treatment shall extend at least 4 feet beyond the edge of pavement and to the depth as shown on the plans. The subgrade shall be moisture treated to a minimum of 3 percentage points above optimum moisture content at a minimum of 95 percent standard Proctor (ASTM D 698).

C. Frequency of compaction testing shall not exceed one test for every three hundred linear feet 300' spacing or less ,alternating from left quarter point to center line to right quarter point for every layer of moisture treatment.

D. Moisture treated lifts shall not exceed eighteen inches (18") of thickness.

E. Any embankment that requires moisture conditioning treatment will be treated for the entire height of the embankment.

F. Moisture treatment by injection is <u>not</u> an acceptable method to treat roadway subgrades.

PART 4 - MEASUREMENT AND PAYMENT

4.01 MEASUREMENT

A. This Item shall be measured on a per Square Yard (SY) basis.

4.02 PAYMENT

A. All work performed and materials furnished in accordance with this Item will be paid for at the unit bid price for "Moisture Treated Subgrade." This price is full compensation for all material, labor, equipment, tools and superintendence necessary to complete the work.

END OF SECTION

SECTION 321113

LIME TREATMENT

PART 1 - GENERAL

1.01 DESCRIPTION

A. This Item shall govern stabilization of the new or existing subgrade and shall consist of all labor, equipment and material necessary to pulverize the subgrade clays or existing pavements, add the specified percentage of hydrated lime, mix, mellow, remix and compact the mixture as specified in this Item. The Contractor shall be responsible for making allowances for subgrade bulking during stabilization to achieve design finished subgrade elevation and meeting specified thickness. The finished Item shall be a co mpacted and finished subgrade meeting the grades, thicknesses, lines and typical cross sections shown on the plans and specifications and having:

1. Less than 1 percent swell when tested under a 200 psf stress (ASTM D 4546 / AASHTO T 216).
2. A minimum pH of 12.4 (ASTM D 2976 / AASHTO T 289).

1.02 REFERENCES

A. Project's Subgrade Investigation and Pavement Design Report (if available).

1.03 RELATED SECTIONS

A. Section 071300 – Moisture Barrier

B. Section 312316 – Unclassified Street Excavation

C. Section 321112 – Moisture Treated Subgrade

1.04 SUBMITTALS

A. At least 30 days prior to beginning lime stabilization work, the Contractor shall furnish the City the following:

1. The proposed source and supplier of lime.
2. Description of the proposed construction equipment, construction methods, expected production rates and planned sequence of lime stabilization of subgrade.
3. A lime/on-site soil mix design in accordance with Eades-Grim Method. Design shall comply with the following requirements: 1) Minimum pH: 12.4 (ASTM D 2976/ AASHTO T 289) after completion of initial mixing with lime at ambient temperature. 2) Swell Potential: Less than 1.0 percent, in accordance with ASTM D 4546 / AASHTO T 216 at 200 psf stress.

B. The approval of the lime-soil mix design shall be at the discretion of the City. Once the design is approved in writing, the mix design shall be incorporated into these specifications by reference.

C. During lime stabilization work, the Contractor shall furnish the following information to the

City at the end of each day:

1. Certified truck weight tickets of lime, delivered to or used at the site.
2. A summary of the amount of lime used each day, areas stabilized with lime and first mixed, areas second mixed, completed, and areas with curing completed

PART 2 - PRODUCTS

2.01 MATERIALS

All materials used in the construction shall meet the following requirements. In the event the Contractor wishes to use materials not listed in this section, the Contractor shall submit to the City a mix design data and proof of performance data as required by the City who shall review the submittal and determine whether the materials will meet the design intent. No other materials shall be used without the written permission of the City.

A. Lime - The lime shall meet the requirements of ASTM C977 / AASHTO M 216; contain at least 92 percent calcium and magnesium oxide, and the rate of slaking test for moderate reactivity per ASTM C110 / AASHTO T 232. All lime shall come from a single source, shall be the same source as used in the design, and shall be subject to periodic testing to confirm properties. Each shipment of lime shall be accompanied by a Certificate of Compliance stating the conformance of the product to these specifications. Certificates shall be provided to the City. In the event the Contractor changes lime sources, no work shall be done until the City accepts, in writing, a new lime-soil mix design using the new lime source.

B. Water - Water used for slaking, mixing or curing shall be free of oil, salts, acid, alkali, sugar, vegetable, or other deleterious substances which may cause damage to the finished product. All water shall meet the material requirements AASHTO T 26. Known potable water may be used without testing.

C. Soil - Subgrade soils used in the stabilization shall be of the same AASHTO or ASTM classification and Plasticity Index range as used in the approved mix design. All organics, roots and deleterious materials shall be removed from the area to be stabilized and shall be wasted. The condition of the subgrade soils must be approved by the City prior to beginning work.

D. Asphalt - Asphalt used to seal the surface of the lime stabilized subgrade shall be CSS1h or other approved asphalt as approved by the City and shall conform to the requirements of TxDOT Item 300, "Asphalts, Oils and Emulsions". Each shipment shall be accompanied by a Certificate of Compliance stating the conformance of the product to these specifications which shall be provided to the City.

PART 3 - EXECUTION

3.01 EQUIPMENT

The machinery, tools and equipment necessary for proper prosecution of the work on this Item shall be on the project and approved by the City prior to beginning this Item. All machinery, tools and equipment used shall be maintained in a satisfactory working condition.

A. Lime Storage - Lime shall be suitably stored in closed, weatherproof containers until immediately before use. Storage bins, when used, shall be completely enclosed.

B. Lime Weight Verification - When lime is furnished in trucks, the weight of lime shall be determined on certified scales or the Contractor shall provide a set of standard platform truck scales at a location approved by the City. Scales shall conform to the requirements of TxDOT Item 520, "Weighing and Measuring Equipment".

C. Slurry Equipment - Quick lime used to manufacture slurry on the project, or other location approved by the City shall be slurried in agitated slurry tanks. The slurrying of Quick lime must be handled in such a way as to not generate any dust hazardous to job personnel or to the public or be potentially damaging to any adjacent property.

D. Distributor Trucks - The distributor truck used for slurry placing shall be equipped with an agitator and a calibrated measuring device or as approved by the City and shall be in good working order. The Contractor shall provide to the City the spread rate calibration (or other acceptable means to calculate the spread rate) prior to use of the equipment.

E. Mixers - Mixers shall be of appropriate size and capacity so as not to delay the project and shall be capable of pulverization to these specifications and mixing of the product.

F. Compaction Equipment - Finishing equipment shall consist of smooth steel wheel vibratory compactors or pneumatic tired roller compactors having a minimum tire pressure of 90 psi. Other types of compaction equipment may be approved at the sole discretion of the City.

3.02 CONSTRUCTION

The completed course shall be uniformly stabilized, free from cracks, loose or segregated areas, of uniform density and moisture content, well bound for its full depth and shall have a smooth surface.

A. Preparation of Subgrade - Prior to stabilization the subgrade shall be compacted and shaped to conform to the typical sections, as shown on the plans with allowances made for bulking of the subgrade. The subgrade shall be moisture treated to the lines and grades shown on the plans and as provided for in the pavement design report. The minimum moisture content shall be 3 percentage points above standard Proctor optimum (ASTM D698) with compaction to at least 95%. If the Contractor elects to use a cutting and pulverizing machine that will process the material to the plan depth, the Contractor will not be required to excavate to the secondary grade or windrow the material. This method will be permitted only if a machine is provided which will insure that the material is cut uniformly to the proper depth and which has cutters that will plane the secondary grade to a uniform surface over the entire width of the cut. The machine shall provide a visible indication of the depth of cut at all times.

B. In lieu of using the cutting and pulverizing machine, the Contractor shall excavate and windrow the material to expose the secondary grade to the typical sections, lines and grades as shown on the plans and as established by the City.

C. Pulverization - The existing pavement or base material shall be pulverized or scarified so that 100 percent shall pass the one (1) inch sieve.

D. Application - The design percentage by weight or pounds per square yard of lime to be added will be as shown on the plans and may be varied by the City if conditions warrant. Only two application methods are acceptable; dry application of pebble quick lime or slurried hydrate or quick lime. The rate of application shall be verified using the methods provided in ASTM D 3155.

E. Dry quick lime shall be spread only on that area where the mixing operations can be completed during the same working day. Slurried quick lime shall be spread and mixed within 1 hour. Slurry exposed to the air for over 1 hour shall not be accepted.

F. Unless otherwise approved by the City, the lime operation shall not be started when the air temperature is below 40° F and falling, but may be started when the air temperature is above 35° F and rising. The temperature will be taken in the shade and away from artificial heat. Lime shall not be placed during periods of rain or when weather conditions in the opinion of the City are not suitable. **CAUTION:** Use of quick lime can be dangerous. Users should be informed of the recommended precautions in handling, storage and use of quick lime.

G. Double Application Method – When required, lime shall be applied using the double application method. All other requirements and methods shall remain in force except as follows. One-half the specified quantity of lime shall be applied, mixed and mellowed for at least 3 days or longer as required by the approved mix design. The remaining lime shall be applied, mixed, and mellowed for at least 3 days or longer as required by the approved mix design.

H. Dry Placement - Pebble quick lime shall be distributed by a spreader approved by the City. The lime shall be distributed at a uniform rate to achieve the mix design lime content and in such a manner as to reduce the scattering of lime by wind. Lime shall not be applied when wind conditions, in the opinion of the City, are such that blowing lime becomes objectionable to adjacent property owners or dangerous to traffic. The material shall be sprinkled as approved by the City.

I. Slurry Placement - Lime Slurry shall be delivered to the project in slurry form at or above the minimum lime concentration as listed in the approved mix design. The residue or "stones" remaining in the tank from the slurry procedure shall be spread uniformly over the length of the roadway currently being processed, or wasted, unless otherwise approved by the City. Slurry shall be of such consistency that it can be applied uniformly without difficulty.

J. Initial Mixing - The mixing procedure shall be the same for "Dry Placement" or "Slurry Placement" as herein described. The soil and lime shall be thoroughly mixed by equipment approved by the City. A minimum of 4 passes of the mixer is required. The soil and lime mixture shall be brought to a moisture content at least four (4) percentage points above the design optimum moisture content and shall be left to mellow for three (3) days or longer as required by the approved mix design. The mixing shall continue until a homogeneous friable mixture of material and lime is obtained. The mixture shall have a minimum pH 12.4 (additional lime shall be required to meet this specification).

Minimum passing 3/4" sieve:	100 percent
Minimum passing No. 4 sieve:	60 percent

The mixture shall be sprinkled and mixed during the mellowing process as required to assist in the chemical reaction. Moisture contents shall remain above optimum for the entire mellowing period.

Where measured sulfate level in the light brown clay of the Eagle Ford formation exceeds 0.5 percent (5000 ppm), or exceeds 2.5 percent (25,000 ppm) in the dark brown clay of the Eagle Ford formation, a double lime application is required. The mellowing period shall be extended for at least 5 days or as indicated in the mix design, whichever is longer.

K. Final Lime Mixing - After the required mellowing period the second lime application, if required, shall be made. Upon approval by City, the material shall be uniformly mixed by the approved methods. If the mixture contains clods, they shall be reduced in size by approved pulverizing methods so that the remainder of the clods shall meet the following requirements (visual observation, not testing, required):

Minimum passing 1" sieve:	100 percent
Minimum passing No. 4 sieve:	60 percent

At final mixing, the lime, water content and pH for each course of subgrade stabilization shall conform to the following:

Lime:	+1 percent above design percentage based on dry unit weight of soil
Water:	+2 percentage points above optimum moisture content
pH:	12.4

Samples shall be taken at random locations by a qualified geotechnical testing laboratory selected by the Contractor and approved by the City per the City-required testing schedule.

L. Compaction Methods - Compaction of the mixture shall begin immediately after the requirements listed above are met. NOTE: Where double mixing is required by the mix design, the required additional lime shall be added and the mixture shall be moisture conditioned and pulverized.

Compaction shall continue until the entire depth of the mixture is uniformly compacted to a minimum of 95 percent of standard Proctor density (ASTM D698) at a minimum of 2 percentage points above optimum moisture content.

All irregularities, depressions, or weak spots which develop as determined by the City shall be corrected immediately by scarifying the areas affected, adding or removing materials as required, and reshaping and recompacting by moisture conditioning and rolling. The surface of the course shall be maintained in a moist, smooth condition, free from undulations, ruts and cracking, until other work is placed thereon or the work is accepted.

In addition to the requirements specified for density, the full depth of the material shown on the drawings shall be compacted to the extent necessary to remain firm and stable under construction equipment. After each section is completed, tests will be made by the geotechnical testing laboratory and submitted to the City. If the material fails to meet the density requirements, it shall be reworked to meet the requirements. Throughout this entire operation, the shape of the course shall be maintained by blading, and the surface upon completion shall be smooth and shall conform with the typical section shown on the drawings and to the established lines and grades. Should the material, due to any reason or cause, lose the required stability, density, and finish before the next course or pavement is placed, it shall be recompacted and refinished at the entire expense of the Contractor. When shown on the plans or approved by the City, multiple lifts will be permitted.

M. Finishing and Curing - After the final layer or course of lime-stabilized subgrade has been compacted, it shall be brought to the required lines and grades in accordance with the typical sections. The completed section shall then be finished by rolling with a pneumatic or other suitable roller sufficiently light to prevent hair line cracking. The finished surface shall not deviate by more than 0.04 feet (0.5 inch) from the actual finish grade. Any variations in excess of this tolerance shall be corrected by the Contractor, at the Contractor's entire expense immediately prior to placement of the next paving course, in a manner satisfactory to the City.

The completed section shall be moist-cured until a non-yielding surface is obtained to support construction traffic and the next layer of the pavement is constructed, as approved by the City.

In the event the surface cannot be covered by the next layer of pavement or be kept moist, an asphalt membrane shall be applied at the rate of 0.25 gallons per square yard. The Contractor shall protect the membrane from traffic and contamination until the next layer of the pavement system is placed. Additional testing may be required to verify moisture content as determined by the City.

N. Reworking a Section - When a section is reworked within 72 hours after completion of compaction, the Contractor shall rework the section to provide the required compaction. When a section is reworked more than 72 hours after completion of compaction, the Contractor shall add 25 percent of the specified percentage of lime.

O. Stormwater Control- Lime (concentrated or diluted) shall not be allowed to enter a storm drain system or natural waterway. The lime shall be applied in a manner thsat prevents puddling or runoff. Runoff will be considered a spill. Spills shall be immediately reported to The City of Frisco Stormwater Inspector during City working hours or to the Fire Department dispatcher during evening s and weekends. The spill site shall be neutralized, cleaned up, and removed from the site. Washing down the spill is not allowed. This is subsidiary to the Lime Treatment item, and no additional payment shall be made.

3.03 TOLERANCES

The following requirements shall apply to the finished lime stabilized subgrade:

A. Tolerance in Thickness - One measurement shall be taken at random locations by the geotechnical testing laboratory on center of roadway at 300 feet spacing along each roadway direction. When the measurement is not deficient by more than 0.5 inch from the plan thickness, full payment will be made. When such measurement is deficient more than 0.5

inch and not more than 1.0 inch from the plan thickness, two additional measurements shall be taken at random (typically, 25 feet either side of the deficient measurement) and used in determining the average thickness. When the average of the 3 measurements is not deficient by more than 0.5 inch from the plan thickness, full payment will be made. When the average thickness is deficient by more than 0.5 inch, the entire area shall be reprocessed at the Contractor's entire expense.

3.04 QUALITY CONTROL

A. The City may periodically require tests by the geotechnical testing laboratory to assist him or her in evaluating the quality of work and Contractor performance. The Contractor shall assist the City by excavating and backfilling shallow areas as necessary to take density tests.

B. Any constructed course which does not meet specification requirements shall be reworked, at the Contractor's entire expense, to bring that work within specification requirements. The City's test shall be used in evaluating whether project meets specification requirements. The following table provides minimum testing requirements:

TEST TYPE	TEST STANDARD	MINIMUM FREQUENCY OF TESTS
In-Place Soil Density and Moisture Content	ASTM D 698 ASTM D 1556 ASTM D 2167 ASTM D 2922 ASTM D 2216 ASTM D 3017	One test for every 300 feet spacing or less along each roadway direction, but no less than one test per day for each roadway subgrade
pH	Eades and Grim procedures ASTM D 2976	One test per 600 feet spacing or less along each roadway direction, but no less than test per day for each roadway subgrade
Thickness		One test for 300 feet spacing or less along each roadway direction, but no less than one test per day for each roadway subgrade
Compressive Strength	ASTM D 558 ASTM D 1633 ASTM D 2166	(a) One test for 900 feet spacing or less along each roadway direction, but no less than one test per day for each roadway subgrade, sealed and cured at 100 degrees F for 5 days (b) Strength not corrected for length/diameter.
Pulverization Testing	Tex-101-E, Part III	One test for every 600 feet spacing or less along each roadway direction, but no less than one test per day for each roadway subgrade
Swell Potential	ASTM D 4546	One test for every 900 feet spacing or less along each roadway direction, but no less than one test per day for each roadway subgrade

Note: The City may test any other property of the materials or lime-soil mixture in this Item at intervals or occasions of his/her choosing.

PART 4 - MEASUREMENT AND PAYMENT

4.01 MEASUREMENT

A. The Lime Stabilized Subgrade shall be measured by the Square Yard (SY) complete in place and accepted for the thickness shown in the plans.

B. The Lime shall be measured by the Ton (TN) complete in place.

4.02 PAYMENT

A. The Lime Stabilized Subgrade shall be paid for at the unit contract price and shall be total compensation for preparing the roadbed, for loosening, pulverizing, application of lime, water content in the slurry mixture and mixing water; mixing, shaping, sprinkling, compacting, finishing, curing and maintaining; for manipulations required; and for all labor, equipment, fuels, tool, and incidentals necessary to complete the work, all in accordance with the plans and specifications.

B. The Lime material shall be paid for at the unit contract price bid for Lime which price shall be full compensation for furnishing the material; for all freight involved; for all unloading, storing and handling; and for all labor, equipment, fuels, tools, and incidentals necessary to complete the work.

END OF SECTION

SECTION 321116

FLEXIBLE SUBBASE OR BASE (CRUSHED STONE/CONCRETE)

PART 1 - GENERAL

1.01 DESCRIPTION

A. All material, labor, equipment, tools and superintendence necessary to furnish and install Flexible Subbase or Base (crushed stone/concrete) in accordance with *Public Works Construction Standards*, NCTCOG, 4th Edition, Item 301.1 and 301.5.

1.02 REFERENCES

A. *Public Works Construction Standards*, NCTCOG, 4th Edition, Item 301.1 and 301.5

PART 2 - PRODUCTS

2.01 MATERIALS

A. Refer to *Public Works Construction Standards*, NCTCOG, 4th Edition, Item 301.1 and 301.5.

PART 3 - EXECUTION

3.01 PREPARATION

A. Refer to *Public Works Construction Standards*, NCTCOG, 4th Edition, Item 301. And 301.5.

PART 4 - MEASUREMENT AND PAYMENT

4.01 MEASUREMENT

A. Refer to *Public Works Construction Standards*, NCTCOG, 4th Edition, Item 301.1 and 301.5.

4.02 PAYMENT

A. Refer to *Public Works Construction Standards*, NCTCOG, 4th Edition, Item 301.1 and 301.5.

END OF SECTION

SECTION 321123

SAND BEDDING

PART 1 - GENERAL

1.01 DESCRIPTION

A. All material, labor, equipment, tools and superintendence necessary to install Sand Bedding in accordance with *Public Works Construction Standards*, NCTCOG, 4th Edition, Item 504.

1.02 REFERENCES

A. *Public Works Construction Standards*, NCTCOG, 4th Edition, Item 504

PART 2 - PRODUCTS

2.01 MATERIALS

A. Refer to *Public Works Construction Standards*, NCTCOG, 4th Edition, Item 504.

PART 3 - EXECUTION

3.01 INSTALLATION

A. Refer to *Public Works Construction Standards*, NCTCOG, 4th Edition, Item 504.

PART 4 - MEASUREMENT AND PAYMENT

4.01 MEASUREMENT

A. This Item shall not be measured as a separate contract Item unless otherwise noted.

4.02 PAYMENT

A. The work performed and materials furnished in accordance with this Item will not be paid for directly but will be subsidiary to pertinent Items.

END OF SECTION

SECTION 321126

ASPHALT BASE COURSE

PART 1 - GENERAL

1.01 DESCRIPTION

A. All material, labor, equipment, tools and superintendence necessary to furnish and install Asphalt Base Course in accordance with *Public Works Construction Standards*, NCTCOG, 4th Edition, Item 302.8.

1.02 REFERENCES

A. *Public Works Construction Standards*, NCTCOG, 4th Edition, Items 302.3, 302.7, 302.8, 302.9, and 302.10

PART 2 - PRODUCTS

2.01 MATERIALS

A. Refer to *Public Works Construction Standards*, NCTCOG, 4th Edition, Item 302.8.

PART 3 - EXECUTION

3.01 PREPARATION

A. Refer to *Public Works Construction Standards*, NCTCOG, 4th Edition, Item 302.8.

PART 4 - MEASUREMENT AND PAYMENT

4.01 MEASUREMENT

A. Refer to *Public Works Construction Standards*, NCTCOG, 4th Edition, Item 302.10.

4.02 PAYMENT

A. Refer to *Public Works Construction Standards*, NCTCOG, 4th Edition, Item 302.10.

END OF SECTION

SECTION 321133

PORTLAND CEMENT TREATMENT

PART 1 - GENERAL

1.01 DESCRIPTION

A. All material, labor, equipment, tools and superintendence necessary to furnish and install Portland Cement Treatment in accordance with *Public Works Construction Standards*, NCTCOG, 4th Edition, Item 301.1 and 301.3.

1.02 REFERENCES

A. *Public Works Construction Standards*, NCTCOG, 4th Edition, Item 301.1 and 301.3

PART 2 - PRODUCTS

2.01 MATERIALS

A. Refer to *Public Works Construction Standards*, NCTCOG, 4th Edition, Item 301.1 and 301.3.

PART 3 - EXECUTION

3.01 PREPARATION

A. Refer to *Public Works Construction Standards*, NCTCOG, 4th Edition, Item 301.1 and 301.3.

PART 4 - MEASUREMENT AND PAYMENT

4.01 MEASUREMENT

A. Refer to *Public Works Construction Standards*, NCTCOG, 4th Edition, Item 301.1 and 301.3.

4.02 PAYMENT

A. Refer to *Public Works Construction Standards*, NCTCOG, 4th Edition, Item 301.1 and 301.3.

END OF SECTION

SECTION 321216

HOT MIX ASPHALT PAVEMENT

PART 1 - GENERAL

1.01 DESCRIPTION

A. All material, labor, equipment, tools and superintendence necessary to furnish and install Hot Mix Asphalt Pavement in accordance with *Public Works Construction Standards*, NCTCOG, 4th Edition, Item 302.9.

1.02 REFERENCES

A. *Public Works Construction Standards*, NCTCOG, 4th Edition, Items 302.2, 302.3, 302.7, and 302.10

PART 2 - PRODUCTS

2.01 MATERIALS

A. Refer to *Public Works Construction Standards*, NCTCOG, 4th Edition, Item 302.9.

PART 3 - EXECUTION

3.01 PREPARATION

A. Refer to *Public Works Construction Standards*, NCTCOG, 4th Edition, Item 302.9.

PART 4 - MEASUREMENT AND PAYMENT

4.01 MEASUREMENT

A. Refer to *Public Works Construction Standards*, NCTCOG, 4th Edition, Item 302.10.

4.02 PAYMENT

A. Refer to *Public Works Construction Standards*, NCTCOG, 4th Edition, Item 302.10.

END OF SECTION

SECTION 321313

CONCRETE PAVEMENT

PART 1 – GENERAL

1.01 DESCRIPTION

A. All material, labor, equipment, tools and superintendence necessary to furnish and install Concrete Pavement in accordance with *Public Works Construction Standards*, NCTCOG, 4th Edition, Item 303.

1.02 REFERENCES

A. *Public Works Construction Standards*, NCTCOG, 4th Edition, Item 303

B. City of Frisco Standard Details for Concrete Pavement

1.03 SUBMITTALS

A. Submit mix design for each class of concrete.

PART 2 - PRODUCTS

2.01 MATERIALS

A. Refer to *Public Works Construction Standards*, NCTCOG, 4th Edition, Items 303.2 and 303.3.

B. All concrete shall be sulfate resistant mix design.

C. Specified reinforcing steel (#4 bars and larger) shall be of domestic manufacture and shall conform to the requirements of ASTM A615, Grade 60.

D. Grade 40 reinforcing steel (#3 bars) will only be allowed in sidewalks or with approval of the Director of Engineering Services.

E. *Public Works Construction Standards*, NCTCOG, 4th Edition, Items 303.2.2 is hereby modified to allow only Type I/II Portland Cement.

F. *Public Works Construction Standards*, NCTCOG, 4th Edition, Items 303.2.4 is hereby modified to allow only Class F flyash.

G. Expansion joints in paving shall be redwood boards only.

2.02 EQUIPMENT

H. Refer to *Public Works Construction Standards*, NCTCOG, 4th Edition, Item 303.4.

PART 3 - EXECUTION

3.01 INSTALLATION

A. Refer to *Public Works Construction Standards*, NCTCOG, 4th Edition, Items 303.5. and 303.8. Samples of all materials for testing shall be solely the responsibility and expense of the Contractor.

B. Conform to City of Frisco's Standard Details for Concrete Pavement.

C. Slip form pavement method shall be used for all public streets and alleys unless otherwise approved by the Director of Engineering Services. Hand formed pavement method may be used for turn lanes, deceleration lanes, driveway approach, or replacing a panel of public street or alley pavement.

D. Curb shall be cast integral with paving unless otherwise approved by the City.

PART 4 - MEASUREMENT AND PAYMENT

4.01 MEASUREMENT

A. Refer to *Public Works Construction Standards*, NCTCOG, 4th Edition, Item 303.9.

4.02 PAYMENT

A. Refer to *Public Works Construction Standards*, NCTCOG, 4th Edition, Item 303.9.

B. Monolithic curb shall be considered incidental to the work performed and materials furnished in accordance with this Item, and will not be paid for directly but will be subsidiary to Concrete Pavement unless otherwise specified in the plans and in the bid proposal.

END OF SECTION

SECTION 321314

ROLLING

PART 1 - GENERAL

1.01 DESCRIPTION

A. All material, labor, equipment, tools and superintendence necessary for Rolling in accordance with *Public Works Construction Standards*, NCTCOG, 4th Edition, Item 301.1.2.

1.02 REFERENCES

A. *Public Works Construction Standards*, NCTCOG, 4th Edition, Item 301.1.2

PART 2 - PRODUCTS

2.01 MATERIALS

A. TAMPING ROLLER

1. Tamping rollers shall consist of two (2) metal rollers, drums or shells of not less than forty inches (40") in diameter, each not less than forty-two inches (42") in length and unit mounted in a rigid frame in such a manner that each roller may oscillate independently of another. Each roller, drum or shell shall be surmounted by metal studs with tamping feet projecting not less than seven inches (7") from the surface and spaced not less than six inches (6") nor more than 10 inches (10") measured diagonally center to center; and the cross-sectional area of each tamping foot measured perpendicular to the axis of the stud, shall be not less than five square inches (5") nor more than eight square inches (8"). The roller shall be of the type that by ballast loading, the load on each tamping foot may be varied uniformly from 125 p.s.i. of cross-sectional area. The load per tamping foot will be determined by dividing the total weight of the roller by the number of tamping feet in one row parallel to or approximately parallel to the axis of the roller.
2. The tamping roller shall be drawn by approved equipment of adequate tractive effort. Power equipment used in embankment construction shall be the crawler type tractor. Two (2) tamping rollers conforming to the above requirements, drawn by approved equipment, shall be considered a roller unit.

B. TIRE ROLLER

1. Tire rollers shall consist of not less than nine (9) pneumatic-tired wheels, running on axles in such a manner that the rear group of tires will not follow in the tracks of the forward group of wheels, and mounted in a rigid frame, and shall be of a type suitable for ballast loading. The distance between the front and rear axles shall be not less than five feet (5') no more than 10 feet (10').
2. The front axle shall be attached to the frame in such a manner that the roller may be turned in a minimum circle. The pneumatic tire roller shall have an effective rolling width of approximately sixty inches (60"), and shall be ballast loaded so that the load may be varied uniformly from not less than 100 p.s.i. of width of tire tread to 325 pounds per inch of tire tread. The roller, under working conditions, shall provide a uniform compression under all wheels. The total combined width of effective tire tread shall be not less than eighty-five percent (85%) of the effective rolling width. The pneumatic tire

roller shall be drawn by either an approved crawler type, a pneumatic tread tractor, or a truck of adequate tractive effort; and the roller when drawn by either type of equipment shall be considered a pneumatic tire roller unit. Power equipment for rolling on asphalt shall be equipped with pneumatic tires.

PART 3 - EXECUTION

3.01 PREPARATION

A. The embankment or base course shall start longitudinally at the sides and proceed toward the center, overlapping on successive trips at least one-half (l/2) of the width of the pneumatic tire roller unit. Alternate trips of the roller unit shall begin at the low sides and progress toward the high sides.

B. The speed of the power roller and the tamping roller unit, unless otherwise directed by the City, shall be between two (2) and three (3) miles per hour. The speed of the pneumatic tire unit, unless otherwise directed by the City, shall be between four (4) and twelve (12) miles per hour for asphalt surfacing work and between two (2) and six (6) miles per hour for all other compaction work.

PART 4 - MEASUREMENT AND PAYMENT

4.01 MEASUREMENT

A. This Item shall not be measured as a separate contract Item.

4.02 PAYMENT

A. The work performed and materials furnished in accordance with this Item will not be paid for directly but will be subsidiary to pertinent Items.

END OF SECTION

SECTION 321373

JOINT SEALANT

PART 1 – GENERAL

1.01 DESCRIPTION

A. All material, labor, equipment, tools and superintendence necessary for Joint Sealant in accordance with *Public Works Construction Standards*, NCTCOG, 4th Edition, Item 303.5.4.7.

1.02 REFERENCES

A. *Public Works Construction Standards*, NCTCOG, 4th Edition, Item 303.2 and 303.5

PART 2 - PRODUCTS

2.01 MATERIALS

A. Refer to *Public Works Construction Standards*, NCTCOG, 4th Edition, Item 303.2.12.

PART 3 - EXECUTION

3.01 INSTALLATION

A. Refer to *Public Works Construction Standards*, NCTCOG, 4th Edition, Item 303.5.4.

PART 4 - MEASUREMENT AND PAYMENT

4.01 MEASUREMENT

A. This Item shall not be measured as a separate contract Item.

4.02 PAYMENT

A. The work performed and materials furnished in accordance with this Item will not be paid for directly but will be subsidiary to pertinent Items.

END OF SECTION

SECTION 321400

CONCRETE PAVERS

PART 1 – GENERAL

1.01 DESCRIPTION

A. All material, labor, equipment, tools and superintendence necessary for Concrete Pavers in accordance with *Public Works Construction Standards,* NCTCOG, 4th Edition, Item 304.

1.02 REFERENCES

A. *Public Works Construction Standards,* NCTCOG, 4th Edition, Item 304

PART 2 – PRODUCTS

2.01 MATERIALS

A. Refer to *Public Works Construction Standards,* NCTCOG, 4th Edition, Item 304.

B. Colors for use in Frisco include Pavestone Frisco Maroon and Frisco Charcoal or approved equivalent.

PART 3 – EXECUTION

3.01 PREPARATION

A. Refer to *Public Works Construction Standards,* NCTCOG, 4th Edition, Item 304.

PART 4 – MEASUREMENT AND PAYMENT

4.01 MEASUREMENT

A. Item shall be measured complete in place per square-foot (SF) and in accordance with the Contract Documents.

4.02 PAYMENT

A. Refer to *Public Works Construction Standards,* NCTCOG, 4th Edition, Item 304.

.

END OF SECTION

SECTION 321613

CONCRETE CURB AND GUTTER

PART 1 - GENERAL

1.01 DESCRIPTION

A. All material, labor, equipment, tools and superintendence necessary to furnish and install Concrete Curb and Gutter in accordance with *Public Works Construction Standards*, NCTCOG, 4th Edition, Item 305.1.

1.02 REFERENCES

A. *Public Works Construction Standards*, NCTCOG, 4th Edition, Items 203.4, 303 and 305.1

B. City of Frisco's Standard Detail for Concrete Curb and Gutter.

1.03 RELATED SECTIONS

A. Section 321313 – Concrete Pavement

PART 2 - PRODUCTS

2.01 MATERIALS

A. Refer to *Public Works Construction Standards*, NCTCOG, 4th Edition, Item 303.

PART 3 - EXECUTION

3.01 PREPARATION

A. Refer to *Public Works Construction Standards*, NCTCOG, 4th Edition, Items 203.4 and 305.1.

PART 4 - MEASUREMENT AND PAYMENT

4.01 MEASUREMENT

A. Concrete Curb and Gutter will not be measured separately unless indicated otherwise.

4.02 PAYMENT

A. All work performed and materials furnished in accordance with this Item will be paid for at the unit bid price for "Concrete Curb and Gutter". This price is full compensation for all material, labor, equipment, tools and superintendence necessary to complete the work.

END OF SECTION

SECTION 321645

DRIVEWAY APPROACH

PART 1 - GENERAL

1.01 DESCRIPTION

A. All material, labor, equipment, tools and superintendence necessary to furnish and install Driveway Approach in accordance with *Public Works Construction Standards*, NCTCOG, 4th Edition, Item 305.2.

1.02 REFERENCES

A. *Public Works Construction Standards*, NCTCOG, 4th Edition, Items, 303, 305.1 and 305.2

B. City of Frisco's Standard Details for Driveway Approaches

1.03 RELATED SECTIONS

A. Section 032100 – Reinforcing Steel

B. Section 321313 – Concrete Pavement

PART 2 - PRODUCTS

2.01 MATERIALS

A. Refer to *Public Works Construction Standards*, NCTCOG, 4th Edition, Items 303 and 305.1.

PART 3 - EXECUTION

3.01 PREPARATION

A. Refer to *Public Works Construction Standards*, NCTCOG, 4th Edition, Items and 305.2.

PART 4 - MEASUREMENT AND PAYMENT

4.01 MEASUREMENT

A. This Item shall be measured on a per Square Yard (SY) basis, specified by type (Commercial, Residential), complete in place. Measurement shall start at the back of the laydown curb and shall include the area of the curb radii as indicated in the Standard Details. Curbs on driveways shall not be measured separately but shall be included as a part of the driveway concrete.

4.02 PAYMENT

A. All work performed and materials furnished in accordance with this Item will be paid for at the unit bid price for "Driveway Approach." This price is full compensation for all material, labor, equipment, tools and superintendence necessary to complete the work.

END OF SECTION

SECTION 321650

REINFORCED CONCRETE SIDEWALK

PART 1 - GENERAL

1.01 DESCRIPTION

A. All material, labor, equipment, tools and superintendence necessary to furnish and install Reinforced Concrete Sidewalk in accordance with *Public Works Construction Standards*, NCTCOG, 4th Edition, Item 305.2.

1.02 REFERENCES

A. *Public Works Construction Standards*, NCTCOG, 4th Edition, Items 303, 305.1 and 305.2

B. TxDOT current Standard Details for Pedestrian Facilities

C. Current Texas Department of Licensing and Regulation (TDLR) and Americans with Disabilities Act (ADA) requirements.

1.03 RELATED SECTIONS

A. Section 032100 – Reinforcing Steel

B. Section 321313 – Concrete Pavement

C. Section 321655 – Barrier Free Ramp

PART 2 - PRODUCTS

2.01 MATERIALS

A. Refer to *Public Works Construction Standards*, NCTCOG, 4th Edition, Items 303 and 305.1.

B. Welded Wire Fabric is not acceptable as reinforcement.

PART 3 - EXECUTION

3.01 PREPARATION

A. Refer to *Public Works Construction Standards*, NCTCOG, 4th Edition, Items and 305.2.

B. All Reinforced Concrete Sidewalk must be approved by TDLR prior to acceptance.

PART 4 - MEASUREMENT AND PAYMENT

4.01 MEASUREMENT

A. This Item shall be measured on a Square Yard (SY) basis complete in place.

4.02 PAYMENT

A. All work performed and materials furnished in accordance with this Item will be paid for at the unit bid price for "Reinforced Concrete Sidewalk." This price is full compensation for all material, labor, equipment, tools and superintendence necessary to complete the work.

B. Barrier Free Ramps shall be measured and paid for separately in accordance with Section 321655 – Barrier Free Ramp.

END OF SECTION

SECTION 321655

BARRIER FREE RAMP

PART 1 - GENERAL

1.01 DESCRIPTION

A. All material, labor, equipment, tools and superintendence necessary to furnish and install Barrier Free Ramps in accordance with *Public Works Construction Standards*, NCTCOG, 4th Edition, Item 305.2.

1.02 REFERENCES

A. *Public Works Construction Standards*, NCTCOG, 4th Edition, Items 303, 305.1 and 305.2.

B. TxDOT and City Standard Details for Pedestrian Facilities.

C. Current Texas Department of Licensing and Regulation (TDLR) and Americans with Disabilities Act (ADA) requirements.

1.03 RELATED SECTIONS

A. Section 032100 – Reinforcing Steel

B. Section 311313 – Portland Cement Concrete

C. Section 321650 – Reinforced Concrete Sidewalk

PART 2 - PRODUCTS

2.01 MATERIALS

A. Refer to *Public Works Construction Standards*, NCTCOG, 4th Edition, Items 303 and 305.1.

PART 3 - EXECUTION

3.01 PREPARATION

A. Refer to *Public Works Construction Standards*, NCTCOG, 4th Edition, Item 305.2.

B. All Barrier Free Ramps must be approved by TDLR prior to acceptance.

PART 4 - MEASUREMENT AND PAYMENT

4.01 MEASUREMENT

A. This Item shall be measured on a per Each (EA) basis, specified by type, complete in place.

4.02 PAYMENT

A. All work performed and materials furnished in accordance with this Item will be paid for at the unit bid price for "Barrier Free Ramp." This price is full compensation for all material, labor, equipment, tools and superintendence necessary to complete the work.

END OF SECTION

SECTION 321660

CONCRETE MEDIAN NOSE

PART 1 - GENERAL

1.01 DESCRIPTION

A. All material, labor, equipment, tools and superintendence necessary to furnish and install Concrete Median Noses in accordance with *Public Works Construction Standards*, NCTCOG, 4th Edition, Item 305.3.

1.02 REFERENCES

A. *Public Works Construction Standards*, NCTCOG, 4th Edition, Items 305.1, and 305.3.

B. City of Frisco's Standard Detail for Monolithic Median Nose

1.03 RELATED SECTIONS

A. Section 032100 – Reinforcing Steel

B. Section 311313 – Concrete Pavement

PART 2 - PRODUCTS

2.01 MATERIALS

A. Refer to *Public Works Construction Standards*, NCTCOG, 4th Edition, Item 305.3.

B. All median noses shall be monolithic in accordance with the City of Frisco's Standard Detail for Concrete Median Nose.

PART 3 - EXECUTION

3.01 PREPARATION

A. Refer to *Public Works Construction Standards*, NCTCOG, 4th Edition, Item 305.3.

PART 4 - MEASUREMENT AND PAYMENT

4.01 MEASUREMENT

A. This Item shall be measured on a per Each (EA) basis, specified by Type (1 or 2), complete in place.

4.02 PAYMENT

A. All work performed and materials furnished in accordance with this Item will be paid for at the unit bid price for "Concrete Median Nose." This price is full compensation for all material, labor, equipment, tools and superintendence necessary to complete the work. Concrete Pavers within the medians shall be paid for separately.

END OF SECTION

SECTION 321665

REINFORCED CONCRETE HEADER

PART 1 - GENERAL

1.01 DESCRIPTION

A. All material, labor, equipment, tools and superintendence necessary to furnish and install Reinforced Concrete Header in accordance with *Public Works Construction Standards*, NCTCOG, 4th Edition, Item 305.4.

1.02 REFERENCES

A. *Public Works Construction Standards*, NCTCOG, 4th Edition, Items 303 and 305.4.

B. City of Frisco Standard Detail for Concrete Header

1.03 RELATED SECTIONS

A. Section 032100 – Reinforcing Steel

B. Section 321313 –Concrete Pavement

PART 2 - PRODUCTS

2.01 MATERIALS

A. Refer to *Public Works Construction Standards*, NCTCOG, 4th Edition, Item 303.

PART 3 - EXECUTION

3.01 PREPARATION

A. Refer to *Public Works Construction Standards*, NCTCOG, 4th Edition, Item 303.

PART 4 - MEASUREMENT AND PAYMENT

4.01 MEASUREMENT

A. This Item shall be measured on a Linear Foot (LF) basis complete in place.

4.02 PAYMENT

A. All work performed and materials furnished in accordance with this Item will be paid for at the unit bid price for "Reinforced Concrete Header." This price is full compensation for all material, labor, equipment, tools and superintendence necessary to complete the work.

END OF SECTION

SECTION 321723

PAVEMENT MARKERS AND MARKINGS

PART 1 - GENERAL

1.01 DESCRIPTION

A. All material, labor, equipment, tools and superintendence necessary to furnish and install Pavement Markers and Markings.

1.02 REFERENCES

A. TxDOT Items 666, 672, 677, and 678

B. City of Frisco's Standard Details for Pavement Markers and Markings.

C. TxDOT Standard Details included in the plans.

1.03 RELATED SECTIONS

A. Section 347113 – Barricades, Signs, and Traffic Handling

PART 2 - PRODUCTS

2.01 MATERIALS

A. Refer to TxDOT Item 666, 672, 677, and 678.

B. Refer to the City of Frisco's Standard Details for Pavement Markers and Markings.

PART 3 - EXECUTION

3.01 INSTALLATION

A. Refer to TxDOT Item 666, 672, 677, and 678.

B. Each class of raised pavement marker shall be from the same manufacturer.

C. Contact City for approval of pavement marking layouts prior to installation.

D. Surface to which markers are to be attached by an adhesive shall be prepared by any method approved by the City to ensure that the surface is free of dirt, curing compound, grease, oil, moisture, loose or unsound pavement markings and any other material which would adversely affect the adhesive bond.

E. Guides to mark the lateral location of pavement markings shall be established as shown on the plans. The Contractor shall establish the pavement marking guides and the City will verify the location of the guides.

F. The pavement markers shall be placed in proper alignment with the guides. The deviation rate in alignment shall not exceed one (1) inch per 200 feet of roadway. The maximum deviation shall not exceed two (2) inches nor shall any deviation be abrupt.

G. Markers placed that are not in alignment of sequence, as shown on the plans or as stated in this specification, shall be removed by the Contractor at the Contractor's expense. Removal shall be in accordance with TxDOT Item 677 "Eliminating Existing Pavement Markings and Marker", except for measurement and payment. Guides placed on the roadway for alignment purposes shall not establish a permanent marking on the roadway.

H. Unless otherwise shown on the plans, the Contractor shall use the following adhesive materials for placement of markers:

1. Epoxy adhesive for Class E markers.
2. Bituminous adhesive for Classes A, B, C, and D markers on bituminous pavements.
3. Epoxy adhesive for Class A, B, C, and D markers on Portland cement concrete pavements.

I. Adhesive shall be applied in sufficient quantity to ensure that 100 percent of the bonding area of the raised pavement markers shall be in contact with the adhesive.

J. Raised pavement markers, except Class E, shall be in contact with the pavement surface but shall be seated on a continuous layer of adhesive.

K. Unless otherwise noted, adhesives shall be applied in accordance with the manufacturer's recommendations.

L. When bituminous adhesive is used, pavement and raised pavement marker temperature shall be at least 40 degree F. The bituminous adhesive shall not be heated above 400 degree F. The bituminous adhesive shall be agitated intermittently to ensure even heat distribution.

M. Epoxy adhesive shall be machine mixed.

N. Raised pavement markers shall be free of rust, scale, dirt, oil, grease, moisture, or contaminants which may adversely affect the adhesive bond.

O. Raised pavement markers shall be placed immediately after the adhesive is applied and shall be firmly bonded to the pavement. Adhesive or any other material that impairs functional reflectivity will not be acceptable.

P. The roadway to be marked will remain open to traffic and the Contractor shall provide all necessary warning and barricading to insure the safety of the workmen and traffic, and the Contractor must insure proper maintenance of all warning and barricading devices at all times. Construction, signing, channelizing devices, and markings shall conform to the current *Texas Manual on Uniform Traffic Control Devices* (TMUTCD) at all times.

Q. A minimum of one lane in each direction shall remain open to through traffic at all times.

R. The Contractor shall conduct the installation so as to minimize the duration of restricted traffic movements.

S. The Contractor shall apply pavement markers and markings during off-peak traffic hours (9:00 am – 3:30 pm) or as directed by the City.

PART 4 - MEASUREMENT AND PAYMENT

4.01 MEASUREMENT

A. This Item shall be measured on a Lump Sum (LS) basis complete in place or by Each (EA) and Linear Foot (LF) as indicated in the plans.

B. The plan quantity will be determined through calculations and will be used for determining final quantity amounts for payment purposes. Contract adjustments may be made if the actual measured quantity varies by more or less than 5% of the total estimated plan quantity amount. Either the City or the Contractor may initiate this adjustment. If the adjustment is requested by the Contractor, the Contractor must obtain field measurements and calculations justifying the revised quantity. If the adjustment is made by the City, the revised quantity will constitute the final quantity which payment will be made.

4.02 PAYMENT

A. All work performed and materials furnished in accordance with this Item will be paid for at the unit bid price for "Pavement Markers and Markings." This price is full compensation for all material, labor, equipment, tools and superintendence necessary to complete the work. Surface Preparation will not be paid for directly, but considered subsidiary to this Item.

END OF SECTION

SECTION 321725

PREFABRICATED PAVEMENT MARKINGS (WITH WARRANTY)

PART 1 - GENERAL

1.01 DESCRIPTION

A. All material, labor, equipment, tools and superintendence necessary to furnish and install Prefabricated Pavement Markings as indicated in the plans with a manufacturer's warranty bond for a 6 year period. The City will allow a Contractor provided warranty bond in lieu of the manufacturer's bond if all conditions of the manufacturer's warranty including the requirements of this Item are met. In such case, the Contractor is responsible for meeting the warranty requirements. Use the form provided by the City. The City will allow substitution of a contractor's bond with a manufacturer's bond after execution of the Contract prior to final acceptance.

1.02 REFERENCES.

A. City of Frisco's Standard Details for Pavement Markers and Markings.

1.03 RELATED SECTIONS

A. Section 347113 – Barricades, Signs, and Traffic Handling

PART 2 - PRODUCTS

2.01 MATERIALS

A. Contractor shall use 3M 270 Tape (or approved equal) for all directional arrows and messages, and 3M 380 Tape for all longitudinal pavement markings and 12" channelization lines as indicated in the plan. Approved equal pavement markings must meet the TxDOT requirements of Type B markings in DMS-8240.

2.02 EQUIPMENT

A. Provide equipment as required or directed according to the following (The provider of the warranty bond is responsible for providing equipment during the warranty period unless otherwise shown on the plans.):

1. Preparation and Application. Use equipment designed for the pavement preparation and application of the type of pavement marking material selected.

2. Colorimeter. Provide a colorimeter using 45°/0° geometry CIE, D65 Illuminant, 2° standard observation angle meeting the requirements of ASTM E 1347, E 1348, or E 1349.

3. Retroreflectometer. Unless otherwise shown on the plans, provide a portable or mobile retroreflectometer meeting the following requirements.

a. Portable Retroreflectometer. Provide a portable retroreflectometer that meets the requirements of ASTM E 1710

b. Mobile Retroreflectometer. Provide a mobile retroreflectometer that:

(1) is approved by the City and certified by the Texas Transportation Institute Mobile Retroreflectomter Certification Program for project evaluation of retroreflectivity

(2) is calibrated daily, before measuring retroreflectivity on any pavement stripe, with a portable retroreflectometer meeting the following requirements: ASTM E 1710, entrance angle of 88.76°, observation angle of 1.05°, and an accuracy of ±15%;

(3) equires no traffic control when retroreflectivity measurements are taken and is capable of taking continuous readings at or near posted speed.

PART 3 - EXECUTION

3.01 INSTALLATION

A. Contractor to ensure a m anufacturer's representative is present during installation of all pavement markings

B. Prepare the pavement surface using controlled techniques that minimize pavement damage and hazards to the traveling public. Apply the materials, according to the manufacturer's recommendations, using widths, colors, shapes, and at locations as shown on the plans.

C. Obtain approval for the sequence of work and estimated daily production. Use traffic control as shown on the plans or as approved. Establish guides to mark the lateral location of pavement markings as sh own on the plans or as directed, and have guide locations verified. Use material for guides that will not leave a p ermanent mark on the roadway. Apply markings in alignment with the guides and without deviating for the alignment more than 1 in. per 200 ft. of roadway or more than 2 in. maximum

D. Remove all applied markings that are not in alignment or sequence as stated in the plans or as stated in the specifications at the Contractor's expense and in accordance with TxDOT Item 677, "Eliminating Existing Pavement Markings and Markers," except for measurement and payment

E. The City will conduct visual performance evaluations of the markings**.** For markings that do not meet the City's visual performance evaluation, the Contractor may present test results for color (using a colorimeter), retroreflectivity (using a retroreflectometer), and durability (in accordance with ASTM D 913) for the City's use in making acceptance or rejection decisions. For pavement markings not meeting performance requirements, repair or replace until reevaluation shows the Pavement Markers and Markings meet the performance requirements as approved by the City.

F. Written Acceptance. The City will provide written acceptance after the Contractor meets the initial performance requirements. This written acceptance (see attached sample form) will include the date, location, length, and type of pavement markings.

3.02 PERFORMANCE REQUIREMENTS

A. Color. Provide pavement markings consisting of pigments blended to provide color conforming to highway colors as shown in Table 1.

Table 1
Color Requirements

Federal 595 Color		Chromaticity Coordinates								Brightness (Y)
		1		2		3		4		
		x	y	x	y	X	y	x	y	
White	17855	.290	.315	.310	.295	.350	.340	.330	.360	60 min
Yellow	33538	.470	.455	.510	.489	.490	.432	.537	.462	30 min
Black										5 max

B. Retroreflectivity. Provide pavement markings for longitudinal markings meeting the minimum retroreflectivity values listed in Table 2.

Table 2
Minimum Retroreflectivity Requirements

Color	Retroreflectivity, $mcd/m^2/lx$, Min
White	120
Yellow	120

C. Durability. Provide pavement markings that do not lose more than 5% of the striping material in a 1,000- ft. section of continuous stripe or broken stripe (25 broken stripes). Pavement markings must remain in the proper alignment and location.

D. Performance Evaluation Procedures. Provide traffic control and conduct evaluations of color, retroreflectivity, and durability as required or directed by the City.

1. Color. Measure color using 45°/0° geometry CIE, D65 Illuminant, 2° standard observation angle in accordance with ASTM E 1347, E 1348, or E 1349.

2. Retroreflectivity. Unless otherwise shown on the plans, conduct retroreflectivity evaluations of pavement markings with either a portable or mobile retroreflectometer. Make all measurements in the direction of traffic flow, except for broken centerline on 2-way roadways, where measurements will be made in both directions.

   If using a portable retroreflectometer, take a minimum of 1 measurement every mile on each series of markings (i.e., edgeline, center skipline, each line of a double line, etc.), at locations approved by the City. If more than 1 measurement is taken, average the measurements. For all markings measured in both directions, take a minimum of 1 measurement in each direction. If the measurement taken on a specific series of markings within each mile segment falls below the minimum retroreflectivity values, take a minimum of 5 more measurements at locations determined by the City within that mile segment for that series of marking. If the average of these 5 measurements falls below the minimum retroreflectivity requirements, that mile segment of the applied markings does not meet the performance requirement.

   If using a mobile retroreflectometer, review the results to determine deficient sections and deficient areas of interest. These areas do not meet the performance requirements.

3. Durability. Measure durability in accordance with ASTM D 913 for marking material loss and visual inspection for alignment and location. Conduct evaluations at locations approved by the City.

3.03 WARRANTY REQUIREMENTS

A. Each warranty period is for 6 yr. and starts the day after written acceptance.

B. The marking warrantor is responsible for meeting the Performance Requirements for the duration of the warranty period.

C. During the warranty period, the City will conduct periodic visual performance evaluations of the pavement markings. For retroreflectivity the City will use Tex-828-B, "Determining Functional Characteristics of Pavement Markings." The warrantor may be present during these evaluations. For areas, which, in the opinion of the City have a questionable visual evaluation, the warrantor may replace the pavement markings or may conduct a performance evaluation for the performance requirement in question, conduct retroreflectivity evaluations using either portable or mobile retroreflectometer unless otherwise indicated in the Contract Documents. The warrantor is responsible for traffic control when conducting performance evaluations.

D. The warrantor will replace pavement markings that fail to meet the color, retroreflectivity, or durability performance requirements during the warranty period, and must replace the pavement markings that fail to meet the performance requirements within 30 days of notification.

E. All replacement pavement markings must meet the materials and performance requirements of this specification.

F. The end of the warranty period does not relieve the warrantor from the performance deficiencies requiring corrective action identified during the warranty period.

G. The City may exclude pavement markings from the replacement provisions of the warranty period, provided the City determines that the failure is a result of outside causes rather than defective material. Examples of outside causes are extreme wear at intersections, damage by snow or ice removal, and premature pavement failure.

H. Provide a contact person, address and telephone number for notification of needed pavement markings replacement.

I. Each class of raised pavement marker shall be from the same manufacturer.

J. The pavement markers shall be placed in proper alignment with the guides. The deviation rate in alignment shall not exceed one (1) inch per 200 feet of roadway. The maximum deviation shall not exceed two (2) inches nor shall any deviation be abrupt.

K. Unless otherwise noted, adhesives shall be applied in accordance with the manufacturer's recommendations.

L. The roadway to be marked will remain open to traffic and the Contractor shall provide all necessary warning and barricading to insure the safety of the workmen and traffic, and the Contractor must insure proper maintenance of all warning and barricading devices at all times. Construction, signing, channelizing devices, and markings shall conform to the current *Texas Manual on Uniform Traffic Control Devices* (TMUTCD) at all times.

M. A minimum of one lane in each direction shall remain open to through traffic at all times.

N. The Contractor shall conduct the installation so as to minimize the duration of restricted traffic movements.

O. The Contractor shall apply pavement markers and markings during off-peak traffic hours (9:00 am – 3:30 pm) or as directed by the City.

PART 4 - MEASUREMENT AND PAYMENT

4.01 MEASUREMENT

A. This Item shall be measured on a Lump Sum (LS) basis complete in place or by Each (EA) and Linear Foot (LF) as indicated in the plans.

B. The plan quantity will be determined through calculations and will be used for determining final quantity amounts for payment purposes. Contract adjustments may be made if the actual measured quantity varies by more or less than 5% of the total estimated plan quantity amount. Either the City or the Contractor may initiate this adjustment. If the adjustment is requested by the Contractor, the Contractor must obtain field measurements and calculations justifying the revised quantity. If the adjustment is made by the City, the revised quantity will constitute the final quantity which payment will be made.

4.02 PAYMENT

A. All work performed and materials furnished in accordance with this Item will be paid for at the unit bid price for "Prefabricated Pavement Marking" of the color, shape, and width This price is full compensation for all material, labor, equipment, tools and superintendence necessary to complete the work. Surface Preparation will not be paid for directly, but considered subsidiary to this Item.

END OF SECTION

SECTION 328000

IRRIGATION SYSTEM

PART l - GENERAL

1.01 DESCRIPTION

A. Provide complete Irrigation System as shown on plans as described herein.

1.01 REFERENCES

A. Refer to City of Frisco's Approved Material List.

1.02 RELATED SECTIONS

A. Section 329223 - Turfgrass Planting

B. Section 329300 - Tree, Shrub, and Groundcover Planting

l.03 QUALITY ASSURANCE

A. Substitutions:

1. Time: Submit substitution request in writing seven (7) days prior to bid opening.
2. Required Submittal Material:
   a. Sample proposed substitute sprinkler.
   b. Manufacturer's data of sprinkler, discharge rates (GPM), minimum allowable operating pressure, maximum allowable spacing and distance of throw.
   c. Detailed pressure loss computations if proposed differ from those specified.
   d. If proposed substitute require a change in head and piping layout as designed, submit detailed drawings showing design changes and proposed layout.
3. Approval: Approval of proposed substitute will not relieve responsibility for providing a system that will operate according to intent of originally designed system.

B. Installer:

1. Irrigator licensed in State with 5 years minimum continuous experience installing systems of this size and complexity must supervise installation.
2. Complete mainline installation with personnel that have successfully installed equipment and materials as specified on at least three other projects equal in scope.

C. Testing: Perform required testing under observations of Owner. Give 48 hours notice that such tests are to be conducted.

D. Assembly Procedures:

1. Do not alter design hydraulics by installing additional tees or elbows unless approved by Owner.

2. Prior to start of construction; confirm the static water pressure in writing to Owner. If static pressure differs from pressure shown on drawings, do not start work until notified to do so, in writing, by the Owner.

1.04 REFERENCES: The following ASTM designations apply:

A536	Ductile Iron Fittings
D2241	Poly (Vinyl Chloride) (PVC) Plastic Pipe (SDR-PR)
D2672	Bell-End Poly (Vinyl Chloride) (PVC) Pipe
D2464	Poly (Vinyl Chloride) (PVC) Plastic Pipe Fittings, Threaded, Schedule 80
D2466	Poly (Vinyl Chloride) (PVC) Plastic Pipe Fittings, Socket Type, Schedule 40
D2467	Poly (Vinyl Chloride) (PVC) Plastic Pipe Fittings, Socket Type, Schedule 80
D2564	Solvent Cements for Poly (Vinyl Chloride) (PVC) Plastic Pipe and Fittings
D2287	Flexible Poly Vinyl Chloride (PVC) Plastic Pipe
F656	Poly Vinyl Chloride (PVC) Solvent Weld Primer
C213	AWWA Dual Compression Gasket Seal Fittings
D2855	Making Solvent - Cemented Joints with Poly (Vinyl Chloride) (PVC) Pipe and Fittings
F477	Ductile Iron Fitting Gaskets

1.05 SUBMITTALS

A. Product Data: Submit seven (7) copies of manufacturer's specifications and literature for all specified materials.

B. Project Record Documents:

1. Comply with Contract Documents and requirements.
2. Locate by written dimension, routing of mainline piping, remote control valves and quick coupling valves. Locate mainlines by single dimensions from permanent site features provided they run parallel to these elements. Locate valves, intermediate electrical connections, and quick couplers by two dimensions at approximately 70 degrees to each other provided they are within 50 feet of a permanent site feature. Valves, electrical connections and quick couplers beyond 50 feet must be located by triangulation using three dimensions from building corners, walk intersections or similar junctures.
3. When dimensioning is complete, transpose work to mylar reproducible tracings. Owner will provide tracings.
4. Submit completed tracings prior to final acceptance. Mark tracings "Record Prints Showing Significant Changes". Date and sign plans.
5. Provide three complete operation manuals and equipment brochures neatly bound in a hard back three-ring binder. Include any warranties and guarantees extended to the Contractor by the manufacturer of all equipment. Include seven (7) executed copies of “Guarantee for Landscape Irrigation System”.

GUARANTEE FOR LANDSCAPE IRRIGATION SYSTEM

We hereby guarantee that the landscape irrigation system we have furnished and installed is free from defects in materials and workmanship, and the work has been completed in accordance with the plans and specifications, ordinary wear and tear and unusual abuse or neglect expected. We agree to repair or replace any defects in material or workmanship, which may develop, and to repair or replace any damage resulting from the repairing or replacing of such defects at no additional cost to the Owner. We shall make such repairs or replacements within a reasonable time, as determined by the Owner, after receipt of written notice. In the event of our failure to make such repairs or replacements within a reasonable time after receipt of written notice from the Owner, we authorize the Owner to proceed to have said repairs or replacements made at our expense. We will pay the costs and charges therefore upon demand. This guarantee shall remain in effect for a period of two (2) years from the date of Final Completion, as determined by the Owner or the Owner's Representative.

PROJECT: _____

LOCATION: _____

SIGNED: _____

COMPANY: _____

ADDRESS: _____

_____

_____

PHONE: (_____) _____ - _____

DATE OF ACCEPTANCE:____ / _____ / _____

1.06 COORDINATION

A. Complete sleeve installation (not otherwise provided) in coordination with paving and other concrete pours.

B. Coordinate to ensure that electrical power source is in place.

C. Coordinate system installation with work specified in other Sections and coordinate with landscape installer to ensure plant material is uniformly watered in accordance with intent shown on Plans.

1.07 WARRANTY AND MAINTENANCE

A. Extend to Owner any warranties and guarantees provided by manufacturer of equipment used.

B. Warranty materials and workmanship for a minimum of two years after final acceptance.

C. Include repair of backfill settlement, packing the earth firmly around the heads, quick couplers, and valve boxes.

D. Limit warranty to repair and replacement of defective materials or workmanship, including repair of backfill settlement.

1.08 CONNECTION TO DOMESTIC WATER SUPPLY

A. Complete connection to water supply in accordance with governing codes and regulations.

B. Provide and pay for any required permits.

PART 2 - PRODUCTS

2.01 DEFINITIONS

A. Sprinkler Mains: Piping from water source to operating valves. Hydrant lines and quick coupling valves (QCV) are considered sprinkler mains.

B. Lateral Piping: Piping from operating valves to sprinkler heads.

2.02 POLYVINYL CHLORIDE PIPE

A. Polyvinyl Chloride Pipe (hereinafter referred to as PVC pipe) shall be manufactured in accordance with the product standards as follows:

1. Mainline Piping-PVC, Schedule 40 - solvent weld joints
2. Lateral Piping-PS-22-70, SDR-21, Class 200 - solvent-weld joints
3. Marking and Identification: Permanently marked with the following information: manufacturer's name, pipe size, type of pipe and material, SDR Number, Commercial Standard Number, and NSF (National Sanitation Foundation) Seal.
4. Purple pipe required for all irrigation maintained by the City (medians, etc).

2.03 PIPE FITTINGS:

A. PVC Sch. 40, as manufactured by the Lasco Company, or approved equal.

B. All PVC fittings shall be of the same material as the PVC pipe specified and be compatible with the PVC pipe furnished.

C. Use only solvent recommended by the manufacturer of the PVC pipe and the manufacturer of the PVC fittings.

2.04 COPPER PIPE AND FITTINGS:

A. Pipe: Type "M", hard, straight lengths, of standard size and dimensions.

B. Fittings: Cast brass or wrought copper sweat-solder type.

2.05 VALVE WIRING:

A. Single conductor copper type UF wire with 4/64 in. vinyl insulation U.L. approved for direct underground burial in 30 volt AC or less service.

B. Valve wiring to controllers: Fourteen- (14) minimum (heavier if required based on length of run).

C. Ground wiring from electric valves to controllers: Twelve- (12) gauge minimum (heavier if required based on length of run)

2.06 FLEXIBLE PVC NIPPLES: Lawn heads: Nominal ½" x 12" long flexible PVC.

2.07 SWING JOINT ASSEMBLY: Nipples for fixed copper risers, nominal ½" x 4" long.

2.08 PVC NIPPLES:

A. High-Pop Shrub Head: ½” dia. Unitized O-Ring Assembly. Lasco #T5-32-212

B. Rotary Spray Head: ¾” dia. Unitized O-Ring Assembly. Lasco #T7-32-212

2.09 MATERIALS LIST: Refer to plans.

2.10 MAINLINE SHUT-OFF VALVES:

A. Four inch (4") and larger: Cast iron bodied, bronze fitted gate valves with gasket type pipe connections and a 200 W.O.G. rating. Valve stems shall be fit with square operating nuts of standard size. Manufacturer - Kennedy #597X or approved equal.

B. Three inch (3") and smaller: Plastic bodied, ball valves with threaded connections and an ASTM standard F-1970 pressure rating. Manufacturer – Colonial TUBV or approved equal.

2.11 DRAIN VALVES:

A. Bronze bodied globe valves with rubber seats and threaded IPS pipe connections with a 125 W.O.G. rating. Valve stems shall be equipped with a round wheel handle.
B. Manufacturer: Nibco or approved equal.

2.12 QUICK COUPLER VALVES AND KEYS:

A. Valves: One-inch (1") bronze bodied valves with a rubber seat and locking vinyl cover.

B. Keys: Bronze construction with 1” MIP x ¾” FIP threads.

C. Manufacturer: RAINBIRD 44LRC or approved equal.

2.13 REINFORCEMENT STAKES: Galvanized steel pipe 1-inch diameter, Sch. 40. Secure to QCV with stainless steel worm gear clamps.

2.14 ROTARY HEADS: At the discretion of the City of Frisco, multi-stream multi-trajectory rotary nozzles, oscillating stream nozzles, bubbler systems, drip systems and rotor heads shall be installed on all irrigation systems. The city reserves the right to require efficient irrigation products where suitable.

A. High impact plastic gear driven rotary heads with a 3/4" IPS connection. Head shall have interchangeable nozzles. Nozzle as specified on plans.

B. Manufacturer: Hunter PGP or approved equal.

2.15 SPRAY HEADS:

A. Pop-up spray heads, 4" or 12" pop-up assembly as shown with a poly carbonate body. Nozzles shall be efficient technology nozzles such as multi-stream multi-trajectory rotary nozzles, oscillating stream nozzles or other nozzles with a minimum precipitation rate of 1inch per hour and .7 minimum distribution uniformity Refer to plans for size.

B. Manufacturer: Hunter MP Rotator, Toro Precision Series, and RAINBIRD Rotary nozzles. Series or approved equal.

2.16 ELECTRIC VALVES:

A. Normally closed glass filled nylon body valve with a Buna N reinforced diaphragm fitted with a 24 volt, ¼ amp solenoid in a waterproof housing and pressure regulating module.

B. Manufacturer: RAINBIRD PEB-PRS-B. Refer to plan for size or approved equal.

2.17 VALVE BOXES:

A. Electric Valves:

1. 12 in. x 17 in. x 12 in. deep plastic valve box with locking lid and extensions as required.
2. Manufacturer: Ametek or approved equal.

B. Quick Coupling Valves:

1. 10 in dia. x 12 in. deep plastic valve box with extensions as required.
2. Manufacturer: Ametek or approved equal.

C. Backflow Preventer:

1. Jumbo plastic valve box with locking lid and extensions as required.
2. Manufacturer: Ametek or approved equal.

D. Meter Boxes for Reclaimed Water:

1. Regular Box: 17” x 30” x 18” Purple Box w/ Purple Locking AMR Lid
   a. Top: D1730-18-PBody, Series D1730, 17” x 30”
   b. Base: D1730-18-PKSPSM, Series D1730, 17” x 30”
   c. Lid: D1730-KSPSM-LID, Series D1730, 17” x 29 ½”

2. Jumbo Box: 26” x 15” x 14” Purple Locking AMR Lid
   a. Top: DFW65C-14 PBody, Series 65C, 26” x 15” x 14”
   b. Base: DFW65C-14-PKSPSM, Series 65C, 26” x 15” x 14”
   c. Lid: DFW65C-PKSPSM-Lid, Series 65C, 26 $^{7}/_{8}$” x 15 ¼”

3. Manufacturer: DFW Plastics or approved equal.

4. Purple Plastic Locking Lid:
   a. Plastic lid shall be purple solid through and have a key locking mechanism.
   b. Lid shall be spring loaded with brass locking mechanism with standard brass key. Manufactured by Midland Mfg. Co. or Approved Equal.
   c. Lid shall have “RECLAIM WATER” and manufacturer’s name and logo molded into the lid. Font: Standard Fadal CNC Font with 1” characters x .150” deep.
   d. Lid shall seat securely and evenly inside the box and shall not overlap the top edge of the box. Tread Dimensions: .188” x . 938” x .150”.
   e. Lid shall be molded with grid pattern in an effort to provide skid resistance.
   f. Lid shall have an AMR Slide Mount molded into the lid. Mount to be molded on underside of lid and off center for placements of an AMR transponder.

5. Purple Plastic Body
   a. Body of box shall be purple and have crush resistant ribbing along outside of box.
   b. Body shall have a flange around the lid opening to prevent settling and aide in adjustment to grade.
   c. Body shall have one pipe slot on each end of the body measuring 4”x9”.

2.18 WIRE SPLICES:

A. Valve Wiring: Waterproof type connectors with plastic housing and non-settling sealant.

B. DBY by 3M Company, King One Step wire connector, or approved equal.

2.19 RAIN/FREEZE SENSOR:

A. Wireless Rain/Freeze Sensor with transmitter and receiver.

B. Attach to top of 2" galvanized pipe 10 foot above grade and 2 feet below grade set in concrete.

C. Paint pipe semi gloss black.

D. Manufacturer: RAINBIRD or approved equal.

PART 3 - EXECUTION

3.01 INSPECTION:

A. Examine areas and conditions under which irrigation sprinkler system is to be installed.

B. Verify that interfacing work specified elsewhere is complete.

C. Notify Owner in writing of conditions detrimental to proper and timely completion of Work.

D. Do not proceed until conditions are satisfactory.

3.02 INSTALLATION:

A. General:

1. Compliance: Complete installation in strict accordance with manufacturer's recommendation, which shall be considered a part of these specifications.
2. Stake location of each sprinkler for approval of Owner before proceeding. Do not exceed manufacturer's maximum spacing limits.
3. Piping Layout: Piping layout is diagrammatic. Route piping around trees and shrubs to avoid damage to plantings. Do not dig within balls of newly planted trees and shrubs.
4. Discrepancies:
   a. Point out any discrepancy between the plans and the field conditions that may affect uniform coverage. Do not proceed until any design change made necessary by such discrepancy is approved by Owner.
   b. Should such changes create extra cost, approval for extra compensation shall be obtained in writing by Owner before commencing work.
   c. Should such changes create savings in cost, a written reduction in the contract price shall be approved in writing by Owner before commencing work.

B. Excavations: Excavations are unclassified and include earth, loose rock, or combinations, in wet or dry state. Backfill trenches with material removed except if rock is encountered haul this material off site, and backfill to ensure a minimum of 3 inches of rock free soil surrounding pipe.

C. Water Meter and Backflow Prevention: Refer to plans.

3.03 PIPE INSTALLATION:

A. General: Width of trenches to be approximately twice as large as the pipe diameter.

B. Mainline and Lateral Piping: Install with 12 inches of soil cover over laterals and 24" coverage over 8" mainline and 18" coverage over 6" and small mainline.

C. Trenching: Provide firm, uniform bearing for entire length of pipe to prevent uneven settlement. Wedging or blocking of pipe is not permitted. Remove foreign matter from inside of pipes before assembly. Keep inside of piping clean during and after layout of pipes.

D. Backfill: Water jet and compact to 90% to prevent after-settling. Hand rake trenches and adjoining areas to leave grade in condition equal to before installation.

3.04 PVC PIPE AND FITTINGS ASSEMBLY:

A. Solvent: Use solvent and procedures recommended by manufacturer to make solvent-welded joints. Thoroughly clean pipe and fittings before applying solvent.

B. PVC to Metal Connections: Use Teflon tape.

C. Threaded PVC Connections: Use threaded PVC adapters into which pipe may be welded. Use Teflon tape on threads.

3.05 ELECTRICAL VALVES:

A. Provide valves in accordance with materials list and size according to plans.

B. Install valves in a level position in accordance with manufacturer's specifications.

C. Provide plastic valve box, centered over valve, flush with finish grade. Provide valve box extensions as required.

D. Install 0.5 cubic feet washed pea gravel in bottom of valve box.

3.06 SPRINKLERS:

A. General: Provide in accordance with materials list with nozzle in accordance with plans. Change nozzle degree and trajectory if wind conditions affect coverage. Receive approval from the Owner prior to any change. Install heads adjacent to walks and curbs 2 inches clear of paving.

B. High-Pop Shrub Heads: Provide nozzles as indicated in 2.15 twelve (12”) inch pop-up body. Attach to lateral piping with ½” . . Firmly tamp soil around base plate and leave head plumb. Underside of flange shall be set flush to 1" above finish grade.

C. Lawn Heads: Attach sprinklers to lateral piping with flex PVC pipe. Firmly tamp soil around base plate and leave head plumb. Underside of flange shall be set flush to 1/4" above finish grade in hydro seeded areas and 1" above finish grade in solid sodded areas.

D. Rotary Heads: Install as detailed on the plans on swing joints. Follow manufacturer's assembly and installation procedure. Set heads flush with finish grade or sod.

3.07 QUICK COUPLING VALVES (QCV): Provide in accordance with materials list and as detailed on plans. Stake with a 1" galvanized pipe.

3.08 WIRING:

A. Sprinkler Controls to Valves:

1. Conduit is not required for U.F. wire unless otherwise noted on plans. Tuck wire under piping.
2. Make wire connections with waterproof connectors according to manufacturer's recommendations.
3. Provide a separate wire from controller to each electric valve. Provide a common neutral wire from controller to valves served by a particular controller.
4. Provide a 24 inch long wire coils at valves.
5. An expansion coil shall be provided every 200 feet, which consists of 10 wraps around a 1" PVC pipe or some other method approved by the Owner.
6. All valve wires from the same controller shall be bundled together every 10 feet with plastic electrical tape.

B. Wire Testing:

1. Before any backfills are placed over the communication cable, test the wires with a megger for wire installation resistance. Minimum insulation resistance to ground shall be 100K OHMS to ground. Any conductor not meeting this requirement hall be replaced and retested.
2. After backfill is completed, retest the wires with a megger. The minimum acceptable insulation resistance to ground on this test shall be 100K OHMS to ground. Replace and retest any conductor not meeting this requirement.

3.09 TESTING:

A. Notify Owner to review work 48 hours prior to testing pipe and fittings for leaks.

B. Test mains for a period of four hours under static pressure. If leaks (or pressure drops) occur, correct defect and repeat test.

3.10 FINAL ADJUSTMENT:

A. Make final adjustments of sprinkler system prior to Owner’s final inspection.

B. Flush system by removing nozzles from heads on ends of lines and operating system.

C. Adjust sprinklers for proper operation and proper alignment for direction of throw.

D. Adjust each section for operating pressure and balance to other sections by use of flow adjustment on top of each valve. Correct operating pressure at last head of each section - 50 psi for rotary heads and 20 to 25 psi for spray heads.

E. Adjust nuzzling for proper coverage. Prevailing wind conditions or slopes may indicate that arc of angle or trajectory of spray should be other than as shown on plans. Change nozzles to provide correct coverage.

3.11 CLEANUP: Keep premises clean and neat.

PART 4 –MEASUREMENT AND PAYMENT

4.01 MEASUREMENT AND PAYMENT

A. Measurement and Payment shall be specified in the Contract Documents.

END OF SECTION

SECTION 329113

FERTILIZER

PART 1 – GENERAL

1.01 DESCRIPTION

A. All material, labor, equipment, tools and superintendence necessary to furnish and install Fertilizer in accordance with *Public Works Construction Standards*, NCTCOG, 4th Edition, Item 202.4.

1.02 REFERENCES

A. *Public Works Construction Standards*, NCTCOG, 4th Edition, Item 202.4

PART 2 – PRODUCTS

2.01 MATERIALS

A. Refer to *Public Works Construction Standards*, NCTCOG, 4th Edition, Item 202.4.

PART 3 – EXECUTION

3.01 PREPARATION

A. Refer to *Public Works Construction Standards*, NCTCOG, 4th Edition, Item 202.4.

PART 4 – MEASUREMENT AND PAYMENT

4.01 MEASUREMENT AND PAYMENT

A. The work performed and materials furnished in accordance with this Item will not be paid for directly but will be subsidiary to pertinent Items.

END OF SECTION

SECTION 329119

TOPSOIL

PART 1 – GENERAL

1.01 DESCRIPTION

A. All material, labor, equipment, tools and superintendence necessary to furnish and install Topsoil in accordance with *Public Works Construction Standards*, NCTCOG, 4th Edition, Item 202.2.

1.02 REFERENCES

A. *Public Works Construction Standards*, NCTCOG, 4th Edition, Item 202.2

PART 2 – PRODUCTS

2.01 MATERIALS

A. Refer to *Public Works Construction Standards*, NCTCOG, 4th Edition, Item 202.2.

PART 3 – EXECUTION

3.01 PREPARATION

A. Refer to *Public Works Construction Standards*, NCTCOG, 4th Edition, Item 202.2.

PART 4 – MEASUREMENT AND PAYMENT

4.01 MEASUREMENT

A. Refer to *Public Works Construction Standards*, NCTCOG, 4th Edition, Item 202.2 unless otherwise specified in the Contract Documents.

4.02 PAYMENT

A. Refer to *Public Works Construction Standards*, NCTCOG, 4th Edition, Item 202.2 unless otherwise specified in the Contract Documents.

END OF SECTION

SECTION 329223

TURFGRASS PLANTING

PART 1 - GENERAL

1.01 DESCRIPTION

A. This work includes all labor, materials, and equipment for soil preparation, fertilization, planting, and other requirements regarding Turfgrass Planting areas shown on the plans.

1.02 RELATED SECTIONS

A. Section 024100 - General Site Preparation

B. Section 328000 - Irrigation System

C. Section 329113 – Fertilizer

D. Section 329119 - Topsoil

1.03 SUBMITTALS

A. Delivery Receipts and Invoices: All delivery receipts and copies of invoices for materials used for this work shall be subject to checking by the Owner and shall be subsequently delivered to the office of the Owner.

B. Samples and Producers' Specifications: Various samples, certificates, and specifications of seed, fertilizer, sand, compost, other soil amendments, and other materials shall be submitted for approval as required by subsequent sections of this specification.

PART 2 - PRODUCTS

2.01 TURFGRASS

A. Bermudagrass Seed: Turfgrass seed shall be "Cynodon dactylon" (Common Bermudagrass). The seed shall be harvested within one (1) year prior to planting, free of Johnsongrass, field bind weed, dodder seed, and free of other weed seed to the limits allowable under the Federal Seed Act and applicable seed laws. The seed shall not be a mixture. The seed shall be hulled, extra fancy grade, treated with fungicide, and have a germination and purity that will produce, after allowance for Federal Seed Act tolerances, a pure live seed content of not less than 85% using the formula: purity % times (germination % times plus hard or sound seed %). Seed shall be labeled in accordance with U.S. Department of Agriculture rules and regulations.

1. Certificate Submittal: Prior to planting, provide the Owner or his representative with the State Certificate stating analysis of purity and germination of seed.

B. Sod: Turfgrass sod shall be "Cynodon dactylon" (Common Bermudagrass). Sod shall consist of stolons, leaf blades, rhizomes, and roots with a healthy, virile system of dense, thickly matted roots throughout the soil of the sod for a thickness not less than three-quarters (3/4")

inch. Sod shall be alive, healthy, vigorous, free of insects, disease, stones, and undesirable foreign materials and grasses. The grass shall have been mowed prior to sod cutting so that the height of the grass shall not exceed two (2") inches. Sod shall have been produced on growing beds of clay or clay-loam topsoil. Sod shall not be harvested or planted when its moisture condition is so excessively wet or dry that its survival will be affected. All sod is to be harvested, delivered, and planted within a thirty-six (36) hour period of time. Sod shall be protected from exposure to wind, sun, and freezing. If sod is stacked, it shall be kept moist and shall be stacked roots-to-roots and grass-to-grass.

1. Dimensions: All sod shall have been machine cut to uniform soil thickness of one (1") inch plus or minus one-quarter (1/4") inch. All sod shall be of the same thickness. Rectangular sections of sod may vary in length, but all shall be of equal width and of a size that permits the sod to be lifted, handled, and rolled without breaking. Broken pads and torn, uneven ends will be unacceptable.

2.02 FERTILIZER

A. General: Fertilizer shall be a commercial product, uniform in composition, free flowing, and suitable for application with approved equipment, Fertilizer shall be delivered to the site in fully labeled original containers. Fertilizer which has been exposed to high humidity and moisture has become caked or otherwise damaged making it unsuitable for use will not be acceptable.

B. Initial Planting Application: Fertilizer for the initial planting application shall be of an organic base containing by weight the following (or other approved) percentages of nutrients: 15-15-15 (N-P-K), also containing 10-15% sulphate and traces of iron and zinc as required and approved by the Owner. At least 50% of the nitrogen component must be of a slow-release formulation such as area-based and plastic resin-coated fertilizers.

1. Specification Submittal: Submit a sample label or specification of the fertilizer proposed to be used for the Owner's approval.

C. Post Planting Application: Fertilizer for the post planting application will be a chemical base fertilizer containing by weight the following percentages of nutrients: 21-0-0 (N-P-K) ammonium sulphate or the nitrogen equivalent of 33-0-0 ammonium nitrate.

1. Specification Submittal: Submit a sample label or specification of the fertilizer proposed to be used for the Owner's approval.

2.03 HYDRAULIC-MULCH MATERIALS

A. Refer to the Public Works Construction Standards, NCTCOG 4th Edition, Item 202.6.4.4.

B. Public Works Construction Standards, NCTCOG 4th Editions, Item 202.6.4.4 is hereby modified by excluding the compliance with NCTCOG Item 202.4 Fertilizer.

C. Fertilizer for hydraulic mulching will comply with requirements of this specification.

2.04 SOIL AMENDMENTS (Not required.)

PART 3 - EXECUTION

3.01 GENERAL

A. All turfing operations are to be executed across the slope, parallel to finished grade contours.

3.02 SOIL PREPARATION

A. Contractor shall kill all vegetation prior to soil preparation.

B. Tillage: Tillage shall be accomplished to loosen the soil, destroy existing vegetation, and prepare an acceptable seed/sprig/sod bed. All areas shall be tilled with a heavy duty disc or a chisel-type breaking plow, chisels set not more than ten (10”) inches apart. Initial tillage shall be done in a crossing pattern for double coverage, followed by a disc harrow. Depth of tillage shall be five (5”) inches. A heavy duty rototiller may be used for areas to be planted with sod.

C. Cleaning: Soil shall be further prepared by the removal of debris, building materials, rubbish, weeds, and stones larger than three-quarters inch (3/4") diameter.

D. Fine Grading: After tillage and cleaning, all areas to be planted shall be leveled, fine graded, and drug with a weighted spike harrow or float drag. The required result shall be the elimination of ruts, depressions, humps, and objectionable soil clods. This shall be the final soil preparation step to be completed before the commencement of fertilizing and planting.

E. Rock Removal: During the soil preparation process, a “Rock Pick” or other approved piece of machinery shall be used to gather surface stones as small as three-quarter (3/4”) inch in diameter. The Contractor shall be responsible for the disposal of collected materials as waste per “Clean Up” Paragraph 3.10.

3.03 FERTILIZING

A. Initial Planting Application: The specified fertilizer shall applied at the rate of (18) pounds per one thousand (1,000) square feet (800 pounds per acre).

1. Timing: The initial planting application of fertilizer for seeded/sprigged areas shall be applied after the soil preparation, but not more than two (2) days prior to turfgrass planting. (Fertilizer shall be applied over sodded areas after planting, but not more than two (2) days later.)

B. Post Planting Application: Thirty (30) days after planting, turfgrass areas shall receive an application of 21-0-0 or 33-0-0 fertilizer at the rate of nine (9) pounds per one thousand (1,000) square feet (400 pounds per acre).

1. Timing: The Owner or his representative will determine if it is too late in the growing season for the post planting application. In the event that it is, the application shall be made in the spring of the next year, or the cost of the application may become a credit due to the Owner.

2. Post Planting Maintenance: See Paragraph 3.07. Areas without a uniform stand (complete coverage) that must be maintained later than thirty (30) days after the initial planting shall

receive subsequent applications of fertilizer, as described above, every thirty (30) days until a uniform stand is achieved.

3.04 PLANTING:

A. Seeding: Following soil preparation and initial fertilizing, apply Bermudagrass seed at the rate of two (2) / three (3) pounds per one thousand (1,000) square feet (90/130 pounds per acre) or ryegrass seed at the rate of eight (8) pounds per one thousand (1,000) square feet (350 pounds per acre). Seed shall be uniformly placed with a Brillion seeder-cultipacker, or the seed shall be broadcast uniformly, followed by rolling with a weighted lawn roller.

1. Timing: Bermudagrass shall not be seeded in planting periods other than the following unless special permission is granted by the Owner: April 15 to June 15, and August 15 to September 15.

2. Hydraulic Mulch (where required): Refer to Public Works Construction Standards, NCTCOG 4th Edition, Item 202.6.4.4.

B. Solid Sodding: Prior to laying the sod, the planting bed shall be raked smooth to true grade and moistened to a depth of four (4") inches, but not to the extent causing puddling. The sod shall be laid smoothly, tightly butted edge to edge, and with staggered joints. The sod shall be pressed firmly into contact with the sod bed by rolling or by hand tamping with an approved tamper so as to eliminate all air pockets, provide a true and even surface, and insure knitting without displacement of the sod or deformation of the surfaces of sodded areas. Following compaction, fine screened soil of good quality shall be used to fill all cracks between sods. Excess soil shall be worked into the grass with suitable equipment and shall be well watered. The quantity of fill soil shall be such that it will cause no smothering of the grass.

3.05 PROTECTION: No heavy equipment shall be moved over the planted lawn area unless the soil is again prepared, graded, leveled, and replanted. It will be the responsibility of this Contractor to protect all paving surfaces, curbs, utilities, plant materials, and any other existing improvements from damage. Any damages shall be repaired or replaced at no cost to the Owner. This Contractor will also locate and stake all irrigation heads, valve risers, etc., prior to beginning any soil preparation work.

3.06 ESTABLISHMENT AND ACCEPTANCE: Regardless of unseasonable climatic conditions or other adverse conditions affecting planting operations and the growth of the turfgrass, it shall be the sole responsibility of the Contractor to establish a uniform stand of turfgrass as herein specified. When adverse conditions such as drought, cold weather, high winds, excessive precipitation, or other factors prevail to such an extent that satisfactory results are unlikely, the Owner may, at his own discretion, stop any phase of the work until conditions change to favor the establishment of turfgrass.

3.07 POST-PLANTING MAINTENANCE: Contractor shall begin maintenance immediately after each portion of grass area is planted. All planted areas will be protected and maintained by watering, weed control, and replanting as necessary for at least thirty (30) days after initial planting and for as much longer as necessary to establish a UNIFORM STAND WITH COMPLETE COVERAGE OF THE SPECIFIED GRASS. It is anticipated that a minimum of one (1) mowing will occur before the grass areas are acceptable to the Owner. Only those areas which are not completely covered with the specified grass at the end of thirty (30) days will continue to be replanted and maintained by the Contractor until complete coverage and

acceptable results are achieved. The automatic irrigation system will be available for the Contractor's use. Any other water equipment deemed necessary by the Contractor will be provided by the Contractor at his expense.

A. Watering: Use the automatic irrigation system to apply at least one-half (1/2") inch of water over the entire planted area every three (3) days. Contractor shall water thoroughly and infrequently once grass is established to encourage deep root growth.

B. Mowing: Once grass is established the planted area shall be mowed at least once a week during the growing season. Grass shall be mowed to a height of one (1") inch and shall not exceed four inches (4") in height. Mowing during dormant season will be done as necessary.

C. Weed Control: No sooner than 45 days after grass has germinated any weed growth shall be arrested by applying MSMA broadcasted over the entire planted area. Additional applications of MSMA will be required to eliminate weed growth that continues to grow after the initial application. MSMA will only be used during the growing season. All weed growth during the dormant season will be controlled with spot applications of "Round-Up." "Round- Up" will not be used until the grass is totally dormant.

3.08 GRADING: All grading and placing of topsoil on any given area will be done prior to the beginning of this work. It will be the Contractor's responsibility to maintain the existing grades and leave them in a true and even condition after planting turfgrass. Finish condition of turfgrass will be such that sod sits flush with paving (topsoil 1" below paving) and such that drainage grades and swales function and to not trap drainage on the paving.

3.09 EROSION CONTROL: Throughout the project and the maintenance period for turfgrass, it is the Contractor's responsibility to maintain the topsoil in place at specified grades. Topsoil and turfgrass losses due to erosion will be replaced by the Contractor until establishment and acceptance is achieved.

3.10 CLEAN UP: This Contractor shall remove any excess material or debris brought onto the site or unearthed as a result of his turfgrass operations.

3.11 GUARANTEE: This Contractor shall guarantee all materials used for this work to be the type, quality, and quantity specified.

PART 4 –MEASUREMENT AND PAYMENT

4.01 MEASUREMENT AND PAYMENT

A. Measurement and Payment shall be specified in the Contract Documents.

END OF SECTION

SECTION 329300

TREE, SHRUB, AND GROUNDCOVER PLANTING

PART 1 - GENERAL

1.01 DESCRIPTION

A. This work includes all final fine grading and minor leveling of planting areas, soil preparation, and planting. Furnish all labor, materials, equipment and services required as herein specified and indicated on the drawings. Refer to planting details on plans. NOTE: Plant beds to be left 1" below adjacent paving and slabs after settling.

1.02 RELATED SECTIONS

A. Section 024100 - General Site Preparation

B. Section 328000 - Irrigation System

C. Section 329113 - Fertilizer

PART 2 – PRODUCTS

2.01 TOPSOIL

A. All planting bed topsoil shall be soil/compost mix as produced by Living Earth Technology Co. , Dallas, Texas, or approved equal.

B. Submittal: Submit 1 gallon samples to Owner for Approval.

C. Existing topsoil may be used or amended if it meets the requirements for imported soil and is approved by the landscape architect. Provide a minimum of one soil sample with accompanying soil test report for each topsoil type found on the site.

2.02 COMMERCIAL FERTILIZER

A. Shall be organic base fertilizer containing the following minimum percentages of available plant nourishment, by weight 5-10-5 (N-P-K), mixed nitrogen, not less than fifty (50%) percent from an organic source and trace elements, Wacco brand or approved equal. Any fertilizer which becomes caked or otherwise damaged, making it unsuitable for use, will not be accepted.

B. Commercial fertilizer shall be a complete organic fertilizer, part of the element of which is derived from organic sources. It shall be the type percentages and applied at the rate specified in the soil analysis. Fertilizer shall be delivered mixed as specified in standard size bags, showing weight, analysis, and name of manufacturer, and shall be stored in a weatherproof storage place, and in such a manner that it will be kept dry and its effectiveness will not be impaired.

C. Submittal: Submit labels to Owner for Approval.

2.03 SOIL AMENDMENTS (None required.)

2.04 MULCH

A. Shall be shredded cypress bark mulch.
B. Submittal: Submit a one (1) quart sample of proposed mulch for Owner approval.

2.05 ROOT ACTIVATOR (Not required.)

2.06 WATER: Water shall be available at the site via irrigation system. Water required in connection with planting will be furnished and paid for by the Owner provided it is not used in a wasteful manner. Any hose or other watering equipment shall be provided by the Landscape Contractor to water planting areas until the job is accepted by the Owner.

2.07 PLANT MATERIALS

A. Plant Name and Location: The names and locations of all plants are noted on the drawings. The nomenclature of all plant materials is per Standardized Plant Names, 1942 edition and Manual of Cultivated Plants by L. H. Bailey. Plant materials not conforming to these two references will be rejected by the Owner.

B. Quality and Size: All plant materials shall be first class representatives of their normal species or variety unless otherwise specified. They shall have a habit of growth that is normal for the species and shall be healthy, shapely, well-rooted, and vigorous. All plant materials shall be free from insect pests, plant diseases, and injuries. The containers and balls of all plants delivered to the site shall be free from any weeds or grasses which could be considered noxious or objectionable; i.e., nutgrass or Johnsongrass. ALL PLANT MATERIALS SHALL BE EQUAL TO OR EXCEED THE MEASUREMENTS SPECIFIED ON THE PLANTING PLAN WHICH ARE THE MINIMUM ACCEPTABLE SIZES. They shall be measured after pruning with the branches in normal position. The requirements for measurement, branching, grading, quality, balling and burlapping of plants specified generally follow the code of the standards currently recommended by the American Nursery and Landscape Association, in the American Standards for Nursery Stock.

a. Trees shall not be headed back in the nursery or on site. Trees with multiple leaders, unless specified, will be rejected . Trees with damaged or crooked leader, bark abrasions, sunscald, disfiguring knots, insect damage, or cuts of limbs over 20 mm (3/4 in.) in diameter that are not completely closed will be rejected. The root flare shall be visible. Trees with girdling roots will be rejected.

C. Packaging:

1. Container Grown Plants: Plants designated as “container grown” on the plans shall be full or heavy grade and shall have been growing in the specified size container for one full season prior to delivery to the site.

2. Balled and Burlapped Plants (B&B): Plants designated “B&B” on the plans shall be balled and burlapped. They shall be dug with firm, natural balls of earth of sufficient diameter and depth to encompass the fibrous and feeding root system necessary for full recovery of the plant. Balls shall be firmly wrapped with burlap or similar materials and bound with twine, cord, or wire mesh. Where necessary, to prevent breaking or cracking of the ball during the process of planting, the ball may be secured to a platform.

3. Alternate to B&B: Plants grown in containers may be accepted as B&B provided that the plant has been growing in the container for one full growing season prior to delivery. Alternate must be approved by Owner.

D. Substitutions: Substitutions will be permitted only upon submission of proof that any plant is not obtainable and authorization by the Owner or his representative by a Change Order providing for the use of the nearest equivalent obtainable size or variety of plant having the same essential characteristics with an equitable adjustment of contract price.

E. Biostimulants: shall contain soil conditioners, VAM, and endomycorrhizal and etomycorrhizal fungi spores and soil bacteria approprieate for existing soil conditions. Submit manufacturer literature for approval.

2.08 SOIL STERILANT: (Not required.)

2.09 WEED CONTROLLER: Shall be "Round-Up" as manufactured by Monsanto, Inc or approved equal.

PART 3 – EXECUTION

3.01 LAYOUT

Location and spacing for plants and outline of areas to be planted shall be as denoted by stem location or by notations on the plan. All tree and shrub planting locations shall be staked by the Landscape Contractor and shall be approved by the Owner prior to digging the planting pits.

3.02 SCARIFICATION

A. All bed areas to receive planting shall be scarified to a depth of twelve (12") inches and all debris, stone, rubbish, and weeds shall be removed from the site.

B. Weed Control: Prior to scarification the Contractor shall apply "Round-Up" herbicide to all bed areas. Follow manufacturer's directions as to timing requirements for effective weed control.

3.03 BED PREPARATION

A. Planting areas shall be dug and soil fully prepared, graded, and made ready to receive the plants before delivery of plant materials. After planting, all beds shall be one (1") inch above finished grade to allow for settling.

B. Groundcover and Vine Planting Areas:

1. Commercial Soil Mix: All planting beds shall be excavated to twelve (12") inches below finished grade by Landscape/General Contractor, and all debris, stone, rubbish, weeds, and topsoil shall be removed from the site. The subgrade shall then be tilled to a depth of six (6") inches and the planting bed shall be backfilled with soil compost mix as available from Living Earth Technology Co., Inc., Dallas, Texas, or approved equal. Upon replacement of topsoil with mix and after watering in, the bed should be at the specified level.

C. Tree and Shrub Planting Pits:

1. Planting Pits: After scarifying, the planting pits shall be excavated. All shrub pits shall be a minimum of six (6”) inches larger in diameter and three (3”) inches deeper than the shrub ball or root spread. All tree pits shall be a minimum of twelve (12”) inches larger in diameter and 2-3 inches less deep than the rootball. All tree pits shall be tested for percolation. If water does not drain withing 24 hours, drainage or a more suitable species or location shall be provided. sp.

2. Soil Mix: Soil mix for backfilling the tree and shrub planting pits shall be soil/compost mix as specified for Groundcover and Vine Planting Areas.

D. Raised Planters:

1. Backfilling: Planters shall be backfilled with specified commercial soil mix.

3.04 DELIVERY OF PLANT MATERIALS

Plants shall be packed and protected during delivery and after arrival at the site, against climatic, seasonal, wind damage, or other injuries, and at no time shall be allowed to dry out.

3.05 PROTECTION OF PLANT MATERIALS

All plants shall be handled so that roots are adequately protected at all times from drying out and from other injury. The balls of balled plants which cannot be planted immediately on delivery shall be “heeled in” for protection with soil mulch, straw, or other acceptable material.

3.06 SETTING THE PLANTS

All plants shall be planted in pits, centered, and set to touch such depth that the finished grade level at the plant after settlement will be the same as that at which the plant was grown. Each plant shall be planted upright and faced to give the best appearance or relationship to adjacent plants or structures. No burlap shall be pulled out from under balls or balls broken when taken from containers. All broken or frayed roots shall be cut off cleanly. Prepared soil shall be placed and compacted carefully to avoid injury to roots and to fill all voids. When the hole is nearly filled, add water and root activator, mixed per manufacturer’s recommendations, and allow it to soak away. Fill the hole to finished grade and form a shallow saucer around each tree or shrub by placing a ridge of topsoil around the edge of each pit after planting.

3.07 MULCHING

All plants will be mulched after planting with a three inch (3”) deep layer of mulch material entirely covering the area around each plant except as noted. The root flare of trees shall not be covered with much. In the groundcover and massed shrub areas, the entire area between the plants is to be so treated, regardless of plant spacing.

3.08 GRADING

The surface of all planting areas shall slope as shown on the plans. Unless otherwise shown, slope one-quarter (1/4”) inch per foot (two (2%) percent gradient) away from foundations and walk.

3.09 CLEANUP

All excess soil, soil preparation materials, fertilizer, or plant containers shall be removed form the site upon completion of the work.

3.10 PRUNING AND SPRAYING

Each tree will be pruned to preserve the natural shape and character of the plant. All pruning will be done after delivery to the site, under supervision of the Owner. All soft wood or sucker growth and all broken or badly bruised branches shall be removed. All pruning diameter will be painted with tree surgery paint, applied on all cambium and other living tissues immediately after cuts are made. Immediately after planting and staking, all plant material except coniferous evergreens must be sprayed with an antidesiccant, if required, using an approved power sprayer for applying an adequate film over trunks, branches, and foliage. Antidesiccants and surgery paint shall be delivered in manufacturer's sealed containers and used in accordance with their recommendations.

3.11 MAINTENANCE

The Landscape Contractor is responsible for watering, cultivating, and other necessary maintenance (including regular mowing) until the completion and acceptance of the project.

3.12 INSPECTION FOR ACCEPTANCE

A. Inspections: Inspection of work and planting to determine completion of the work, exclusive of possible warranty plant replacement, will be made by the Owner upon notice by the Landscape Contractor. The Owner needs not less than two (2) days notice prior to the anticipated date, enabling him to schedule the inspection.

B. Acceptance: Acceptance of all work and planting, exclusive of possible plant replacements subject to guarantee, will be granted to the Landscape Contractor, provided there are no deficiencies at inspection time. After inspection, the Landscape Contractor will be notified by a letter of acceptance of work by the Owner. All plants must be healthy (not dry or wilted) to be accepted.

3.13 GUARANTEE

A. Terms: All shrubs and groundcover shall be guaranteed for a minimum of one (1) year and all trees for one (1) year or in accordance with the Contract Documents, whichever is greater. Guarantee begins upon Final Acceptance of project by City.

B. Plant Replacement: At the end of each guarantee period, inspection will be made by the Owner and the Landscape Contractor. Any plant material required under this contract that is dead or not in satisfactory growth condition shall be removed and replaced with the same size and kind of plant specified, at no cost to the Owner.

3.14 MAINTENANCE GUIDE

The Landscape Contractor, upon delivery of the plant materials, shall deliver to the Owner a brief, written maintenance guide. This guide should describe recommended planting maintenance procedures, methods, products, quantities, timing, etc.

PART 4 –MEASUREMENT AND PAYMENT

4.01 MEASUREMENT AND PAYMENT

A. Measurement and Payment shall be specified in the Contract Documents.

END OF SECTION

SECTION 329600

REMOVAL, PROTECTION AND REPLACEMENT OF TREES, SHRUBBERY, PLANTS, SOD, AND OTHER VEGETATION

PART 1 – GENERAL

1.01 DESCRIPTION

A. All material, labor, equipment, tools and superintendence necessary for removal, protection and replacement of trees, shrubbery, plants, sod and other vegetation in accordance with *Public Works Construction Standards*, NCTCOG, 4th Edition, Item 202.1.

1.02 REFERENCES

A. *Public Works Construction Standards*, NCTCOG, 4th Edition, Item 202.1

B. ANSI A300, Pruning Standards

C. City of Frisco Tree Preservation Ordinance

D. City of Frisco Tree Protection Standard Details

1.03 RELATED SECTIONS

A. Section 024100 - General Site Preparation

PART 2 – PRODUCTS

2.01 MATERIALS

A. Refer to *Public Works Construction Standards*, NCTCOG, 4th Edition, Item 202.1.

PART 3 – EXECUTION

3.01 PREPARATION

A. Refer to Public Works Construction Standards, NCTCOG, 4th Edition, Item 202.1.

B. Unless otherwise specified on the plans, trees and shrubs with calipers greater than three (3”) inches shall not be cleared (removed) provided that both of the following conditions are met:

1. The vegetation exists in an area that is not proposed for pavement, a structure, or the playing bounds of an athletic field.
2. The vegetation is in an area where the cut or fill does not exceed six inches (6”).

C. The Owner will assist the Contractor in identifying trees that are to be saved from clearing if not specified in the plans. The Contractor will protect such trees from construction damage such as trunk impacts and scrapes, limb breakage, compaction of soil within the drip line, and other injurious construction activities. If necessary, the Owner may direct the Contractor, at the Contractor’s expense, to erect protective stockades along the drip lines of trees that the

Owner considers vulnerable to damage. Such stockades shall be of eight foot (8') long x six inch (6") diameter posts vertically buried three feet (3') deep at six foot (6') intervals along the drip line.

D. Where grading or clearing and grubbing operations are to occur between trees that are to be preserved and protected, the Contractor will prune the lower branches of these trees as necessary to prevent their breakage and to permit access by construction machinery. Branches will be cut off to the trunk or major limb pursuant to ANSI A300. The Owner may direct that the Contractor remove additional branches in such a manner that the tree presents a balanced appearance. Scars will be treated with a heavy coat of an approved tree sealant.

PART 4 – MEASUREMENT AND PAYMENT

4.01 MEASUREMENT

A. Refer to *Public Works Construction Standards*, NCTCOG, 4th Edition, Item 202.1 unless otherwise specified in the Contract Documents.

4.02 PAYMENT

A. Refer to *Public Works Construction Standards*, NCTCOG, 4th Edition, Item 202.1 unless otherwise specified in the Contract Documents.

END OF SECTION

SECTION 330131

WASTEWATER AND MANHOLE TESTING

PART 1 – GENERAL

1.01 DESCRIPTION

A. All material, labor, equipment, tools and superintendence necessary to test wastewater mains and manholes in accordance with *Public Works Construction Standards,* NCTCOG, 4th Edition, Items 502.1.5 and 507.5.

1.02 REFERENCES

A. *Public Works Construction Standards,* NCTCOG, 4th Edition, Items 502.1.5 and 507.5.

1.03 SUBMITTALS

A. Copies of all test reports.

PART 2 – PRODUCTS

Not Used

PART 3 – EXECUTION

3.01 WASTEWATER MAIN TESTING

The Contractor shall complete each of the following tests on all wastewater mains.

A. Low pressure air testing in accordance with *Public Works Construction Standards,* NCTCOG, 4th Edition, Item 507.5.1.3.

B. Deflection testing in accordance with *Public Works Construction Standards,* NCTCOG, 4th Edition, Item 507.5.1.4.

3.02 WASTEWATER MANHOLE TESTING

The Contractor shall complete one of the following tests on all wastewater manholes.

A. Exfiltration testing in accordance with *Public Works Construction Standards,* NCTCOG, 4th Edition, Item 502.1.5.1.

B. Vacuum testing in accordance with *Public Works Construction Standards,* NCTCOG, 4th Edition, Item 502.1.5.2.

PART 4 – MEASUREMENT AND PAYMENT

4.01 MEASUREMENT

A. Refer to *Public Works Construction Standards*, NCTCOG, 4th Edition, Item 502.1.6.

4.02 PAYMENT

A. Wastewater and manhole testing shall be subsidiary to the wastewater main and manhole bid items. No separate pay item for wastewater and manhole testing.

END OF SECTION

SECTION 330132

TELEVISION INSPECTION FOR WASTEWATER MAINS

PART 1 – GENERAL

1.01 DESCRIPTION

A. All material, labor, equipment, tools and superintendence necessary to perform television inspection of wastewater mains in accordance with *Public Works Construction Standards,* NCTCOG, 4th Edition, Item 507.5.2.

1.02 REFERENCES

A. *Public Works Construction Standards,* NCTCOG, 4th Edition, Item 507.5.2

1.03 SUBMITTALS

A. CD or DVD with wastewater main television inspection videos and data log summary sheets.

PART 2 – PRODUCTS

Not Used

PART 3 – EXECUTION

3.01 PREPARATION

A. Refer to *Public Works Construction Standards,* NCTCOG, 4th Edition, Item 507.5.2.

PART 4 – MEASUREMENT AND PAYMENT

4.01 MEASUREMENT

A. Refer to *Public Works Construction Standards,* NCTCOG, 4th Edition, Item 507.6.1.

4.02 PAYMENT

A. Television inspection of wastewater mains shall be subsidiary to the wastewater main bid items. No separate pay item for television inspection of wastewater mains.

END OF SECTION

SECTION 330510

TRENCHING, BACKFILLING AND COMPACTION

PART 1 – GENERAL

1.01 DESCRIPTION

A. All material, labor, equipment, tools and superintendence necessary to perform Trenching, Backfilling and Compaction operations for utility construction in accordance with *Public Works Construction Standards*, NCTCOG, 4th Edition, Items 107.19.3, 203 and 504.

1.02 REFERENCES

A. *Public Works Construction Standards*, NCTCOG, 4th Edition, Items 107.19.3, 203 and 504

1.03 SUBMITTALS

A. Trench safety plan in accordance with *Public Works Construction Standards*, NCTCOG, 4th Edition, Item 107.19.3.3.

PART 2 – PRODUCTS

Refer to *Public Works Construction Standards*, NCTCOG, 4th Edition, Item 504.2.

PART 3 – EXECUTION

3.01 CONSTRUCTION

A. Refer to *Public Works Construction Standards*, NCTCOG, 4th Edition, Items 107.19.3, 203 and 504.

B. Trenches shall be excavated by a trenching machine, backhoe or dragline, except in locations where hand trenching is required. The banks of trenches shall be vertical, to a point one foot (1') above the top of pipe.

C. The excavation shall not advance more than three hundred feet (300') ahead of the completed and backfilled line. Pipe shall be laid in all trenches that have been opened before the end of each day's work, unless the Contractor secures written permission to do otherwise from the Inspector.

D. The final backfill shall be moisture treated to a minimum of 3 percentage points above optimum moisture content at a minimum of 95 percent standard Proctor (ASTM D 698).

PART 4 – MEASUREMENT AND PAYMENT

4.01 MEASUREMENT

A. Refer to *Public Works Construction Standards*, NCTCOG, 4th Edition, Item 504.7 for measurement of backfill.

B. Refer to *Public Works Construction Standards*, NCTCOG, 4th Edition, Item 107.19.3.6 for measurement of trench safety.

4.02 PAYMENT

A. Refer to *Public Works Construction Standards*, NCTCOG, 4th Edition, Item 504.7 for payment of backfill.

B. Refer to *Public Works Construction Standards*, NCTCOG, 4th Edition, Item 107.19.3.6 for payment of trench safety.

C. All excavation for utility installation shall be considered subsidiary to the utility bid item. No separate pay item for excavation, backfill and/or trenching, unless otherwise noted.

END OF SECTION

SECTION 330523

TRENCHLESS UTILITY INSTALLATION

PART 1 – GENERAL

1.01 DESCRIPTION

A. All material, labor, equipment, tools and superintendence necessary to furnish and install utility lines using trenchless installation methods in accordance with *Public Works Construction Standards*, NCTCOG, 4th Edition, Item 503.

1.02 REFERENCES

A. *Public Works Construction Standards*, NCTCOG, 4th Edition, Item 503

B. City of Frisco's Standard Details included in the plans.

1.03 QUALITY ASSURANCE

A. DESIGN CRITERIA

The pipe casing (or carrier pipe on uncased bores) shall be designed by a Licensed Professional Engineer for the following loading conditions and applicable combinations thereof:

1. Cooper's E-80 Railway loading or AASHTO HS20 loading as applicable
2. Earth loading with the height of fill above the casing as shown on the plans
3. Loads applied during jacking, including axial load from jacking
4. All other applicable loading conditions, including loads applied during transportation and handling.

B. INSTALLER'S QUALIFICATIONS

Installation shall be by a competent, experienced contractor or sub-contractor. The installation contractor shall have a satisfactory experience record of at least three (3) years engaged in similar work of equal scope.

All welding shall be performed by a certified welder in the state of Texas.

C. PERFORMANCE REQUIREMENTS

Lateral or vertical variation in the final position of the pipe casing (or carrier pipe on uncased bores) from the line and grade established by the ENGINEER shall be permitted only to the extent of 1" in 10' feet, provided that such variation shall be regular and only in the direction that will not detrimentally affect the function of the carrier pipe.

1.04 SUBMITTALS

Submittals shall include:

A. Shop drawings of the casing pipe (or carrier pipe for uncased bores) from the manufacturer. Shop drawings shall include calculations for the design of the casing pipe (or carrier pipe for uncased bores) by a Licensed Professional Engineer.

B. Provide Certificate of Adequacy of Design of casing and/or carrier pipe.

C. Provide record data of casing insulators including sketches of insulators with material components and dimensions and proposed locations of insulators.

D. Provide Pressure Grout material and method.

PART 2 – PRODUCTS

2.01 MATERIALS

A. Refer to *Public Works Construction Standards*, NCTCOG, 4th Edition, Item 503.2.

B. High Density Polyethylene casing spacers are required unless otherwise specified. Refer to the City of Frisco Approved Materials List.

C. Steel casing pipe shall be new (or used if approved by the OWNER) and suitable for the purpose intended and shall have a minimum yield strength of 35,000 psi. Casing shall meet ASTM A-36, ASTM A-570, ASTM A-135, ASTM A-139, or approved equal.

D. Casing pipe shall be coated with coal tar epoxy (15 mils min.) in accordance with AWWA C-210. Pipe joints shall be welded in accordance with AWWA C-206. After pipe is welded, coating shall be repaired.

PART 3 – EXECUTION

3.01 GENERAL

A. Refer to *Public Works Construction Standards*, NCTCOG, 4th Edition, Item 503.3.

B. All casing pipe joints shall be watertight with no water entering the casing from any sources prior to carrier pipe installation.

C. The carrier pipe shall be installed within the casing between the limits indicated on the Plans to the specified lines and grades, and utilizing methods which include due regard for safety of workers, adjacent structures and improvements, utilities, and the public.

D. Furnish all necessary equipment, power, water, and utilities for carrier pipe installation, insulator runner lubricant, grouting, and other associated Work required for the Contractor's methods of construction.

E. Conduct all operations such that trucks and other vehicles do not interfere with traffic or create a dust or noise nuisance in the streets and to adjacent properties. Promptly clean up, remove, and dispose of spoils and slurry spillage and any slurry discharges.

F. All Work shall be done so as not to disturb roadways, adjacent structures, landscaped areas, or existing utilities. Any damage shall be immediately repaired to original or better condition and to the satisfaction of Engineer.

3.02 INSTALLATION OF CARRIER PIPE

A. Pipe Installation: Carrier pipe shall meet the requirements of the applicable Specification section. Remove all loose soil from casing. Grind smooth all rough welds at casing joints. Provide casing spacers, or insulators, or other approved devices, as required, to prevent flotation, movement, or damage to the pipe during installation and annular space grout placement. Every individual pipe section should be supported by spacers as shown in the City's Standard Details. Carrier pipe shall be installed without sliding or dragging it on the ground or in the casing in a manner that could damage the pipe. Coat the casing spacer runners with a non-corrosive/environmentally safe lubricant to minimize friction when installing the carrier pipe.

B. Testing of Carrier Pipe: Testing of the carrier pipe joints shall be completed prior to the filling of the annular space between the casing and carrier pipe with grout. Pressure testing shall be performed in accordance with the specification for the selected pipe material. Any leakage found during this inspection shall be corrected.

C. Backfill Annular Space with Grout: After the installation of the carrier pipe, the annular space (all voids) between the casing and the carrier shall be filled with grout so all remaining surfaces of the exterior carrier pipe wall and casing interior are in contact with the grout. Furnish the necessary grout, equipment, hoses, valves, and fittings for the backfilling operation. Grout shall be pumped through a pipe or hose. Use grout pipes, or other appropriate materials to avoid damage to carrier pipe during grouting. The grout shall be proportioned to flow and to completely fill all voids between the carrier pipe and the casing. The Contractor shall provide end seals, as approved by the Engineer at each end of the casing to contain the grout backfill. The end seals shall be designed to withstand the anticipated grouting pressure and be watertight to prevent groundwater from entering the casing. Block the carrier pipe during grouting to prevent flotation during grout installation. The Contractor shall also protect and preserve the interior surfaces of the casing from damage. It is the responsibility of the Contractor to submit to the Engineer sufficient information indicating all proposed equipment, materials, and the method for filling this void.

3.03 SAFETY

A. The Contractor is responsible for safety on the job site. Perform all Work in accordance with the current applicable regulations of the Federal, State, and local agencies. In the event of conflict, comply with the more restrictive applicable requirement.

B. No gasoline powered equipment shall be permitted in jacking shafts and receiving shafts/pits. Diesel, electrical, hydraulic, and air powered equipment is acceptable, subject to applicable local, state, and federal regulations.

C. Methods of construction shall be such as to ensure the safety of the Work, Contractor's and other employees on site, and the public.

D. Furnish and operate a temporary ventilation system in accordance with applicable safety requirements when personnel are underground. Perform all required air and gas monitoring.

Ventilation system shall provide a sufficient supply of fresh air and maintain an atmosphere free of toxic or flammable gasses in all underground work areas.

E. Perform all Work in accordance with all current applicable regulations and safety requirements of the Federal, State, and local agencies. Comply with all applicable provisions of 29 CFR Part 1926, Subpart S, Underground Construction and Subpart P, Excavations, by OSHA. In the event of conflict, comply with the more stringent requirements.

F. The Contractor shall develop an emergency response plan for rescuing personnel trapped underground in a shaft excavation or pipe. Keep on-site all equipment required for emergency response in accordance with the agency having jurisdiction.

PART 4 – MEASUREMENT AND PAYMENT

4.01 MEASUREMENT

A. Refer to *Public Works Construction Standards,* NCTCOG, 4th Edition, Item 503.4.

4.02 PAYMENT

A. Refer to *Public Works Construction Standards,* NCTCOG, 4th Edition, Item 503.4.

END OF SECTION

SECTION 331113

DUCTILE IRON PIPE AND FITTINGS

PART 1 – GENERAL

1.01 DESCRIPTION

A. All material, labor, equipment, tools and superintendence necessary to furnish and install Ductile Iron Pipe and Fittings in accordance with *Public Works Construction Standards*, NCTCOG, 4th Edition, Item 501.7. and Item 506.

1.02 REFERENCES

A. ANSI/AWWA C104/A21.4 - American National Standard for Cement - Mortar Lining for Ductile-Iron Pipe and Fittings for Water, Latest Revision.

B. ANSI/AWWA C105/A21.5 - American National Standard for Polyethylene Encasement, Latest Revision.

C. ANSI/AWWA C110/A21.10, AWWA Standard for Ductile-Iron and Gray-Iron Fittings, Latest Revision.

D. ANSI/AWWA C111/A21.11, AWWA Standard for Rubber-Gasket Joints for Ductile-Iron Pressure Pipe and Fittings, Latest Revision.

E. ANSI/AWWA C115/A21.15, AWWA Standard for Flanged Ductile-Iron Pipe with Ductile-Iron or Gray-Iron Threaded Flanges, Latest Revision.

F. ANSI/AWWA C150/A21.50,[8] American National Standard for the Thickness Design of Ductile-Iron Pipe, Latest Revision.

G. ANSI/AWWA C151/A21.51, AWWA Standard for Ductile Iron Pipe, Centrifugally Cast, Latest Revision.

H. ANSI/AWWA C153/A21.53, AWWA Standard for Ductile-Iron Compact Fittings for Water Service, Latest Revision.

I. AWWA C600, Installation of Ductile-Iron Water Mains and Their Appurtenances, Latest Revision.

J. AWWA C651, AWWA Standard for Disinfecting Water Mains, Latest Revision.

K. AWWA Manual of Practice M41 Ductile-Iron Pipe and Fittings, Latest Revision.

L. *Public Works Construction Standards*, NCTCOG, 4th Edition, Items 501.7 and 506.

1.03 RELATED SECTIONS

A. Section 330510 – Trenching, Backfilling and Compaction

B. Section 331240 – Polyethylene Encasement

C. Section 331245 – Tapping Sleeves for PVC and Ductile Iron Pipe

D. Section 331260 – Mechanical Restraint for Ductile Iron Pipe

1.04 SUBMITTALS:

Submittals shall be in accordance with the General Conditions and shall include the following:

A. Submittals required prior to fabrication

1. Pipe design calculations sealed by a Licensed Engineer in the State of Texas.

2. Pipe layout drawings including horizontal stations and locations and vertical elevations sealed by a Licensed Engineer in the State of Texas.

3. Thrust restraint calculations sealed by a Licensed Engineer in the State of Texas.

4. Certification with full compliance with the specifications

5. Complete materials specification for each part to be furnished.

6. Technical Bulletins and Brochures

7. Statement of Warranty.

8. An estimated delivery date for the equipment (which shall be stated in calendar days after the releases date to the manufacturer).

9. Name, address, phone number, and fax number of manufacturer's representative.

10. Test to be run during manufacturing process

B. Submittals required prior to Shipping

1. Certified copies of all test.

2. Lifting instructions

1.04 QUALITY ASSURANCE

A. Manufacturer: Finished pipe shall be the product of one (1) manufacturer. Pipe manufacturing operations (pipe, fittings, lining, coating) shall be performed at one (1) location.

1.05 DELIVERY AND STORAGE

A. Delivery and Storage shall be in accordance with AWWA C600 and AWWA Manual of Practice M41.

PART 2 – PRODUCTS

2.01 DUCTILE IRON PIPE

A. Refer to *Public Works Construction Standards,* NCTCOG, 4th Edition, Item 501.7.

B. Buried ductile iron pipe may be mechanical joint, push-on joint, or restrained push-on joint.

C. All ductile iron pipe shall be cement mortar lined in accordance with AWWA C104.

D. All buried pipe shall be polyethylene encased in accordance with AWWA C105.

E. The pressure rating, thickness class, net weight of pipe without lining, length of pipe and name of manufacturer shall be clearly marked on each pipe.

2.02 DUCTILE IRON FITTINGS

A. Refer to *Public Works Construction Standards,* NCTCOG, 4th Edition, Item 501.7.

B. Mechanical joints shall be furnished complete with accessories. Bolts and nuts shall be stainless steel.

C. Fittings shall be provided with bituminous exterior coating and cement-mortar lining inside with seal coat in accordance with AWWA C104.

D. All buried fittings shall be polyethylene encased in accordance with AWWA C105.

E. Unless otherwise specified, all fittings shall be of the mechanical joint type with a minimum pressure rating of 250 psi.

PART 3 – EXECUTION

3.01 PREPARATION

A. Refer to *Public Works Construction Standards,* NCTCOG, 4th Edition, Item 505.1. and 502.4.

3.02 INSTALLATION

A. Refer to *Public Works Construction Standards,* NCTCOG, 4th Edition, Item 506.

B. Jointing Push-On Pipe

1. Remove any foreign matter in the gasket seat of the socket, wipe gasket clean, flex gasket and place in socket with the large round end or bulb end entering first.
2. Seat gasket evenly around the inside of the socket with the groove fitted over the bead. Remove any bulges.
3. Apply a thin film of lubricant furnished by the pipe manufacturer to the inside surface of the gasket. No lubricant other than that furnished with the pipe by the pipe manufacturer will be allowed to be used.
4. Wipe plain end of pipe, to be entered; clean and place in approximate alignment with the bell of the pipe to which it is to be jointed.

5. Apply a thin film of the lubricant to the outside of the plain end about 1” back from the end.
6. Align the pipe and carefully enter the plain end into the socket until it just makes contact with the gasket.
7. Complete joint assembly by forcing the plain end of the entering pipe past the gasket until it makes contact with the bottom of the socket.
8. The maximum deflection at each joint shall not exceed 80% of manufacturer’s recommendation.

C. Jointing Mechanical Joint Pipe

1. After carefully cleaning both spigot and bell and after slipping the following ring and the gasket over the spigot end, the spigot shall be slipped into the bell.
2. A lubricant shall be applied to the spigot end to assist in the assembly as directed by the Inspector.
3. The gasket shall be carefully seated by hand so as to be even in the bell at all points.
4. After drawing up the follower ring to uniform bearing against the gasket the bolts shall be inserted and tightened by hand in pairs using bolts opposite each other.
5. The nuts are to be tightened to hold the required pressure. Extension wrenches or pipes over wrench handles will not be permitted. Ten-inch (10”) ratchet wrenches with a tension setting control shall be used to tighten the nuts unless other types of wrenches are approved by the Inspector.
6. The finished joint shall be neat and uniform and shall be watertight.

D. Concrete thrust blocks and mechanically restrained joints shall be required to resist thrust forces at all horizontal and vertical bends, tees and other fittings.

E. Water mains twelve inches (12”) and smaller in the right-of-way near storm inlets shall be constructed behind the inlet by pulling the pipe using longitudinal bending in accordance with the manufacturer’s requirements.

F. The maximum deflection angle of pipe joints shall be restricted to 80% of the manufacturers’ recommendation. Otherwise, horizontal bends will be required.

G. Potable water mains and wastewater mains must be installed in separate trenches.

H. New tracer wire shall be installed in the trench with all water mains with a terminal box located in each water main valve pad.

3.03 HYDROSTATIC TEST

A. Refer to *Public Works Construction Standards*, NCTCOG, 4th Edition, Item 506.5 alternative 2-hour testing in accordance with AWWA C600.

B. After the pipe has been laid and backfilled, but prior to replacement of pavement, each valved section of newly laid pipe shall be subjected to a hydrostatic pressure test.

C. Each valved section of pipe shall be slowly filled with water by means of a pump connected to the pipe in a satisfactory manner.

D. The pump, pipe connection, and all necessary apparatus including gauges and meters shall be furnished by the Contractor. The City will furnish water for filling lines and making tests through existing mains.

E. The test pressure shall be measured at the point of lowest elevation.

F. Before applying the specified test pressure, all air shall be expelled from the pipe. To accomplish this, taps shall be made, if necessary, at the points of highest elevation and afterwards tightly plugged.

G. At intervals during the test the entire route of the pipe line shall be inspected to locate any leaks or breaks. Any defective joints, cracked or defective pipe, fittings or valves discovered in consequence of this pressure test shall be removed and replaced with sound material in the manner provided, and the test shall be repeated until satisfactory results are obtained.

3.04 PURGING AND DISINFECTION

A. Refer to *Public Works Construction Standards,* NCTCOG, 4th Edition, Item 506.7.

PART 4 – MEASUREMENT AND PAYMENT

4.01 MEASUREMENT

A. Refer to *Public Works Construction Standards,* NCTCOG, 4th Edition, Item 506.9.1.

4.02 PAYMENT

A. Refer to *Public Works Construction Standards,* NCTCOG, 4th Edition, Item 506.9.2.

END OF SECTION

SECTION 331114

PVC PIPE FOR WATER DISTRIBUTION

PART 1 – GENERAL

1.01 DESCRIPTION

A. All material, labor, equipment, tools and superintendence necessary to furnish and install Polyvinyl Chloride (PVC) Water Pipe For Water Distribution in accordance with *Public Works Construction Standards,* NCTCOG, 4th Edition, Item 501.14.

1.02 REFERENCES

A. AWWA C900, AWWA Standard for Polyvinyl Chloride (PVC) Pressure Pipe and Fabricated Fittings, 4 in. through 12 in. (100 mm through 300 mm) for Water Distribution

B. AWWA C905, AWWA Standard for Polyvinyl Chloride (PVC) Pressure Pipe and Fabricated Fittings, 14 in. through 48 in. (350 mm through 1,200 mm), for Water Transmission and Distribution

C. *Public Works Construction Standards,* NCTCOG, 4th Edition, Item 501.14, 502.4.2, and 502.5

1.03 RELATED SECTIONS

A. Section 330510 – Trenching, Backfilling and Compaction

B. Section 331245 – Tapping Sleeves for PVC and Ductile Iron Pipe

C. Section 331260 – Mechanical Restraint for PVC and Ductile Iron Pipe

PART 2 – PRODUCTS

2.01 MATERIALS

A. Refer to *Public Works Construction Standards,* NCTCOG, 4th Edition, Item 501.14.

B. Pipe shall be manufactured in the United States of America and shall be blue in color.

PART 3 – EXECUTION

3.01 PREPARATION

A. Refer to *Public Works Construction Standards,* NCTCOG, 4th Edition, Item 505.1. and 502.4.

3.02 INSTALLATION

A. Refer to *Public Works Construction Standards,* NCTCOG, 4th Edition, Items 502.4 and 506.

B. Concrete thrust blocks and mechanically restrained joints shall be required to resist thrust forces at all horizontal and vertical bends, tees and other fittings.

C. Water mains twelve inches (12”) and smaller in the right-of-way near storm inlets shall be constructed behind the inlet by pulling the pipe using longitudinal bending in accordance with the manufacturer’s requirements.

D. The maximum deflection angle of pipe joints shall be restricted to 80% of the manufacturers’ recommendation. Otherwise, horizontal bends will be required.

E. Potable water mains and wastewater mains must be installed in separate trenches.

3.03 HYDROSTATIC TEST

A. Refer to *Public Works Construction Standards*, NCTCOG, 4th Edition, Item 506.5 alternative 2-hour testing in accordance with AWWA C605. Testing pressure is 200 psi.

B. After the pipe has been laid and backfilled, but prior to replacement of pavement, each valved section of newly laid pipe shall be subjected to a hydrostatic pressure test.

C. Each valved section of pipe shall be slowly filled with water by means of a pump connected to the pipe in a satisfactory manner.

D. The pump, pipe connection, and all necessary apparatus including gauges and meters shall be furnished by the Contractor. The City will furnish water for filling lines and making tests through existing mains.

E. The test pressure shall be measured at the point of lowest elevation.

F. Before applying the specified test pressure, all air shall be expelled from the pipe. To accomplish this, taps shall be made, if necessary, at the points of highest elevation and afterwards tightly plugged.

G. At intervals during the test the entire route of the pipe line shall be inspected to locate any leaks or breaks. Any defective joints, cracked or defective pipe, fittings or valves discovered in consequence of this pressure test shall be removed and replaced with sound material in the manner provided, and the test shall be repeated until satisfactory results are obtained.

3.04 PURGING AND DISINFECTION

A. Refer to *Public Works Construction Standards*, NCTCOG, 4th Edition, Item 506.7.

B. The contractor is solely responsible for injecting the chlorine disinfectant into the conduit, monitoring the solution, collecting samples, and performing the water analysis by an approved laboratory.

PART 4 – MEASUREMENT AND PAYMENT

4.01 MEASUREMENT

A. Refer to *Public Works Construction Standards*, NCTCOG, 4th Edition, Item 506.9.1.

4.02 PAYMENT

A. Refer to *Public Works Construction Standards*, NCTCOG, 4th Edition, Item 506.9.2.

END OF SECTION

SECTION 331213

WATER SERVICE CONNECTIONS

PART 1 – GENERAL

1.01 DESCRIPTION

A. All material, labor, equipment, tools and superintendence necessary to furnish and install Water Service Connections in accordance with *Public Works Construction Standards*, NCTCOG, 4th Edition, Item 502.10.

1.02 REFERENCES

A. AWWA C800, AWWA Standard for Underground Service Line Valves and Fittings

B. AWWA C901, Polyethylene Pressure Pipe and Tubing, 1 in. Through 3 in. for Water Service, Latest Revision.

C. *Public Works Construction Standards*, NCTCOG, 4th Edition, Item 502.10

D. City of Frisco Standard Detail for Typical Service Connection.

PART 2 – PRODUCTS

A. Refer to *Public Works Construction Standards*, NCTCOG, 4th Edition, Items 501.10 and 501.21.

B. Water service pipe shall be polyethylene tubing with detectable tracing wire.

C. Tracing wire shall be 10 AWG Standard with HDPE coating.

D. Tape for the tracing wire shall be polypropylene.

E. Service couplings, meter valves and corporation stops shall be “no-lead brass” fittings.

PART 3 – EXECUTION

3.01 PREPARATION

A. Refer to *Public Works Construction Standards*, NCTCOG, 4th Edition, Item 502.10.3.

B. Tracer wire shall be attached to the polyethylene tubing with two independent, continuous, spiral-wound polypropylene tape layers.

C. Bullhead services that branch at the end of a service line to serve two or more customers will not be allowed.

3.02 CONSTRUCTION

A. Service taps shall be made after the mains have been laid.

B. A tapping saddle shall be used to connect service lines to pipe mains.

C. The service pipe shall be placed at a minimum depth of twenty-four inches (24”) under the finished grade except where the service pipe shall pass under the curb. At this point the service pipe shall be a minimum of twenty-four inches (24”) under the top of curb or a minimum of six inches (6”) under the bottom of the curb and gutter section, or lime stabilized subgrade whichever is greater.

D. Excessive bending of the service pipe, which will injure or reduce the cross sectional area of the pipe, will not be permitted.

E. The length of the service pipe shall extend from the main to a point two feet (2’) back of the street curb or to the property line if no curb exists, unless shown otherwise on the plans.

F. The service pipe shall be continuous with no fittings under paving.

G. If there is a curb, the curb shall be sawcut with “I” and marked with good quality blue paint at the point where the service pipe passes the curb.

H. Sand embedment shall be required two feet (2’) on either side of the service saddle all the way around the water main.

PART 4 – MEASUREMENT AND PAYMENT

4.01 MEASUREMENT

A. Refer to *Public Works Construction Standards*, NCTCOG, 4th Edition, Item 502.10.3.2.2.

4.02 PAYMENT

A. Refer to *Public Works Construction Standards*, NCTCOG, 4th Edition, Item 502.10.3.2.2.

END OF SECTION

SECTION 331216

AIR VALVES FOR POTABLE WATER SYSTEMS AND WASTEWATER FORCE MAINS

PART 1 – GENERAL

1.01 DESCRIPTION

A. All material, labor, equipment, tools and superintendence necessary to furnish and install Air Release Valves For Potable Water Systems in accordance with *Public Works Construction Standards*, NCTCOG, 4th Edition, Item 502.6.3.

1.02 REFERENCES

A. AWWA C512, AWWA Standard for Air-Release, Air/Vacuum, and Combination Air Valves for Waterworks Service, Latest Revision.

B. *Public Works Construction Standards*, NCTCOG, 4th Edition, Item 502.6.3

C. City of Frisco's Standard Details for Combination Air Vacuum Valves.

PART 2 – PRODUCTS

2.01 MATERIALS

A. Refer to *Public Works Construction Standards*, NCTCOG, 4th Edition, Item 502.6.3.

B. Air valves for potable water systems shall be Vento-Mat Series RBX or approved equal.

C. Air valves for wastewater force mains shall be Vento-Mat Series RGX or approved equal.

PART 3 – EXECUTION

3.01 PREPARATION

A. Refer to *Public Works Construction Standards*, NCTCOG, 4th Edition, Item 502.6.6.2.

PART 4 – MEASUREMENT AND PAYMENT

4.01 MEASUREMENT

A. Refer to *Public Works Construction Standards*, NCTCOG, 4th Edition, Item 502.6.8.

4.02 PAYMENT

A. Refer to *Public Works Construction Standards*, NCTCOG, 4th Edition, Item 502.6.8.

END OF SECTION

SECTION 331217

RESILIENT SEATED GATE VALVES

PART 1 – GENERAL

1.01 DESCRIPTION

A. All material, labor, equipment, tools and superintendence necessary to furnish and install Resilient Seated Gate Valves for potable water systems in accordance with *Public Works Construction Standards*, NCTCOG, 4th Edition, Item 502.6.2.

1.02 REFERENCES

A. AWWA C509, AWWA Standard for Resilient Seated Gate Valves for Water Supply Service, Latest Revision.

B. AWWA C515, AWWA Standard for Reduced Wall, Resilient Seated Gate Valves for Water Supply Service, Latest Revision.

C. *Public Works Construction Standards*, NCTCOG, 4th Edition, Item 502.6.2

D. City of Frisco's Standard Detail for Gate Valves.

PART 2 – PRODUCTS

2.01 MATERIALS

A. Refer to *Public Works Construction Standards*, NCTCOG, 4th Edition, Item 502.6.2.

B. Gate valves shall be Mueller Model Series 2360, M&H Model Series 4067/7571, American Flow Control Model Series 2500 or approved equal.

C. Valve boxes shall be three (3) piece screw type cast iron of the extension type. The three (3) pieces shall consist of the top section, bottom section and cover.

PART 3 – EXECUTION

3.01 INSTALLATION

A. Refer to *Public Works Construction Standards*, NCTCOG, 4th Edition, Item 502.6.6.1.

B. All valve locations shall be marked with a "V" sawcut on the curb or pavement. The "V" shall point to the location of the valve as follows:

Valve in pavement	Upright "V"
Valve outside pavement	Upside Down "V"

C. Valve boxes over four feet (4') deep shall require extensions. Valve box extensions shall be cast iron. PVC pipe is not allowed.

3.02 HYDROSTATIC TEST

A. Gate valves shall be tested at a hydrostatic test pressure of 400 psi and shall be guaranteed for 200 psi working pressure.

PART 4 – MEASUREMENT AND PAYMENT

4.01 MEASUREMENT

A. Refer to *Public Works Construction Standards*, NCTCOG, 4th Edition, Item 502.6.8.

4.02 PAYMENT

A. Refer to *Public Works Construction Standards*, NCTCOG, 4th Edition, Item 502.6.8.

END OF SECTION

SECTION 331218

BUTTERFLY VALVES

PART 1 – GENERAL

1.01 DESCRIPTION

A. All material, labor, equipment, tools and superintendence necessary to furnish and install Butterfly Valves For Potable Water Systems in accordance with *Public Works Construction Standards*, NCTCOG, 4th Edition, Item 502.6.5.

1.02 REFERENCES

A. AWWA C504, AWWA Standard for Rubber-Seated Butterfly Valves, Latest Revision

B. *Public Works Construction Standards*, NCTCOG, 4th Edition, Item 502.6.5

C. City of Frisco's Standard Detail for Butterfly Valves.

PART 2 – PRODUCTS

2.01 MATERIALS

A. Refer to *Public Works Construction Standards*, NCTCOG, 4th Edition, Item 502.6.5.

B. Refer to City of Frisco's Approved Material List.

C. Butterfly valves shall be Mueller Model Series 3211 or M&H Model Series 4500/1450 or approved equal. Valves shall be Class 250.

D. Valve boxes shall be three (3) piece screw type cast iron of the extension type. The three (3) pieces shall consist of the top section, bottom section and cover.

PART 3 – EXECUTION

3.01 INSTALLATION

A. Refer to *Public Works Construction Standards*, NCTCOG, 4th Edition, Item 502.6.6.

B. All valve locations shall be marked with a "V" sawcut on the curb or pavement. The "V" shall point to the location of the valve as follows:

Valve in pavement	Upright "V"
Valve outside pavement	Upside Down "V"

C. The butterfly valve operator shall face away from the curb line on all installations.

D. Valve boxes over four feet (4') deep shall require extensions. Valve box extensions shall be cast iron. PVC pipe is not allowed.

PART 4 – MEASUREMENT AND PAYMENT

4.01 MEASUREMENT

A. Refer to *Public Works Construction Standards*, NCTCOG, 4th Edition, Item 502.6.8.

4.02 PAYMENT

A. Refer to *Public Works Construction Standards*, NCTCOG, 4th Edition, Item 502.6.8.

END OF SECTION

SECTION 331219

FIRE HYDRANTS

PART 1 – GENERAL

1.01 DESCRIPTION

A. All material, labor, equipment, tools and superintendence necessary to furnish and install Fire Hydrants in accordance with *Public Works Construction Standards,* NCTCOG, 4th Edition, Item 502.3.

1.02 REFERENCES

A. AWWA C502, AWWA Standard for Dry-Barrel Fire Hydrants, Latest Revision

B. *Public Works Construction Standards,* NCTCOG, 4th Edition, Item 502.3

C. City of Frisco's Standard Details for Fire Hydrants.

PART 2 – PRODUCTS

2.01 MATERIALS

A. Refer to *Public Works Construction Standards,* NCTCOG, 4th Edition, Item 502.3.

B. Refer to City of Frisco's Approved Material List.

C. Fire hydrants shall be Waterous Pacer 5 ¼" Model WB67-250 or American Darling 5 ¼" Model B-84-B or approved equal.

D. Hydrant barrel inside diameter shall not be less than 7 ¼".

E. All hydrants shall be equipped with two (2) hose nozzles and one (1) steamer nozzle. The hose nozzles shall be two and one-half inches (2 ½") nominal I.D. National Standard Thread. Pumper nozzle shall be four inches (4") nominal I.D. National Standard Thread. All nozzles shall be mechanically attached.

F. All five hydrants shall open by turning to the left (counter-clockwise).

G. All hydrants shall be of the breakable type.

H. All hydrants shall have a 4 mil epoxy coating on the interior of the shoe.

PART 3 – EXECUTION

3.01 INSTALLATION

A. Refer to *Public Works Construction Standards,* NCTCOG, 4th Edition, Item 502.3.2.

B. All hydrants shall be painted with two coats of Tnemec Series 530 Omnithane Aluminum, Silver paint.

C. The top bonnet, including the lip, and the nozzle caps of all hydrants shall be painted according to the following table:

Size of Main Connected to Fire Hydrant Lead	Color
6”	Aluminum / Silver
8”	True Blue / Safety
12” or larger	Yellow / Safety

D. Fire hydrants shall be installed so the breakaway point will be no less than four inches (4”) and no greater than eight inches (8”) above the final grade elevation. If grade adjustments are made during residential or commercial construction, the fire hydrant shall be adjusted by builder to meet breakaway requirements listed previously before obtaining certificate of occupancy.

E. Fire hydrants shall be located a minimum of two feet (2’) and a maximum of six feet (6’) from the fire lane or public roadway, based on the location of the sidewalk. The fire hydrant shall not be located in the sidewalk.

F. All fire hydrants shall be installed so that the steamer connection will face the fire lane or public roadway.

G. Fire hydrants shall be located no closer than ten feet (10’) from the curb return at street or fire lane intersections.

H. A blue reflector shall be placed just off center of the street or fire lane opposite fire hydrants. At intersections, reflectors shall be placed on both roadways opposite fire hydrant.

PART 4 – MEASUREMENT AND PAYMENT

4.01 MEASUREMENT

A. Refer to *Public Works Construction Standards*, NCTCOG, 4th Edition, Item 502.3.3.

4.02 PAYMENT

A. Refer to *Public Works Construction Standards*, NCTCOG, 4th Edition, Item 502.3.3.

END OF SECTION

SECTION 331240

POLYETHYLENE ENCASEMENT

PART 1 – GENERAL

1.01 DESCRIPTION

A. All material, labor, equipment, tools and superintendence necessary to furnish and install polyethylene encasement around metal pipe and fittings in accordance with *Public Works Construction Standards*, NCTCOG, 4th Edition, Item 502.8.

1.02 REFERENCES

A. AWWA C105, AWWA Standard for Polyethylene Encasement for Ductile Iron Pipe Systems.

B. *Public Works Construction Standards*, NCTCOG, 4th Edition, Item 502.8

PART 2 – PRODUCTS

2.01 MATERIALS

A. Refer to *Public Works Construction Standards*, NCTCOG, 4th Edition, Item 502.8.1.

B. The polyethylene encasement may be in tube or sheet form and shall have a minimum thickness of 8 mils.

PART 3 – EXECUTION

3.01 INSTALLATION

A. Refer to *Public Works Construction Standards*, NCTCOG, 4th Edition, Item 502.8.2.

B. The polyethylene seams and overlaps shall be wrapped and held in place by 2” wide plastic backed adhesive tape with 2 foot wide overlaps.

C. The wrap on the barrel of the pipe shall be loose enough to allow the polyethylene encasement to shift with the soil.

D. The polyethylene encasement shall be installed without breaks, tears or holes.

PART 4 – MEASUREMENT AND PAYMENT

4.01 MEASUREMENT

A. Refer to *Public Works Construction Standards*, NCTCOG, 4th Edition, Item 502.8.4.

4.02 PAYMENT

A. Refer to *Public Works Construction Standards*, NCTCOG, 4th Edition, Item 502.8.4.

END OF SECTION

SECTION 331245

TAPPING SLEEVES FOR PVC AND DUCTILE IRON PIPE

PART 1 – GENERAL

1.01 DESCRIPTION

A. All material, labor, equipment, tools and superintendence necessary to furnish and install tapping sleeves for polyvinyl chloride (PVC) and ductile iron water pipe in accordance with *Public Works Construction Standards,* NCTCOG, 4th Edition, Item 506.6.

1.02 REFERENCES

A. ANSI/AWWA C110/A21.10, AWWA Standard for Ductile-Iron and Gray-Iron Fittings, Latest Revision.

B. ANSI/AWWA C111/A21.11, AWWA Standard for Rubber-Gasket Joints for Ductile-Iron Pressure Pipe and Fittings, Latest Revision.

C. *Public Works Construction Standards,* NCTCOG, 4th Edition, Item 506.6

PART 2 – PRODUCTS

2.01 MATERIALS

A. Refer to *Public Works Construction Standards,* NCTCOG, 4th Edition, Item 502.10.2.3.

B. Refer to City of Frisco Approved Materials List, Latest Edition.

PART 3 – EXECUTION

3.01 INSTALLATION

A. Refer to *Public Works Construction Standards,* NCTCOG, 4th Edition, Item 506.6.

B. Taps must be at least one nominal size smaller than the water main being tapped for connections to water mains larger than twelve inches (12”) in diameter.

C. The minimum size tap allowed on water mains twenty inches (20”) and larger shall be six inch (6”).

D. No tapping sleeves allowed on asbestos cement water mains.

PART 4 – MEASUREMENT AND PAYMENT

4.01 MEASUREMENT

A. Refer to *Public Works Construction Standards*, NCTCOG, 4th Edition, Item 506.9.1.

4.02 PAYMENT

A. Refer to *Public Works Construction Standards*, NCTCOG, 4th Edition, Item 506.9.2.

END OF SECTION

SECTION 331260

MECHANICAL RESTRAINT FOR PVC AND DUCTILE IRON PIPE

PART 1 – GENERAL

1.01 DESCRIPTION

A. All material, labor, equipment, tools and superintendence necessary to furnish and install thrust restraint for polyvinyl chloride (PVC) and ductile iron water pipe in accordance with *Public Works Construction Standards*, NCTCOG, 4th Edition, Item 502.4.2.

1.02 REFERENCES

A. ANSI/AWWA C110/A21.10, AWWA Standard for Ductile-Iron and Gray-Iron Fittings, Latest Revision.

B. ANSI/AWWA C111/A21.11, AWWA Standard for Rubber-Gasket Joints for Ductile-Iron Pressure Pipe and Fittings, Latest Revision.

C. *Public Works Construction Standards*, NCTCOG, 4th Edition, Item 502.4.2

PART 2 – PRODUCTS

2.01 MATERIALS

A. Refer to *Public Works Construction Standards*, NCTCOG, 4th Edition, Item 502.4.

PART 3 – EXECUTION

3.01 PREPARATION

A. Refer to *Public Works Construction Standards*, NCTCOG, 4th Edition, Item 502.4.

B. Concrete thrust blocks and mechanically restrained joints shall be required to resist thrust forces at all horizontal and vertical bends, tees and other fittings.

C. Concrete thrust blocking shall be poured against undisturbed earth and will not bear against the backfill or bedding of another utility.

PART 4 – MEASUREMENT AND PAYMENT

4.01 MEASUREMENT

A. Refer to *Public Works Construction Standards*, NCTCOG, 4th Edition, Item 502.4.4.

4.02 PAYMENT

A. Refer to *Public Works Construction Standards*, NCTCOG, 4th Edition, Item 502.4.4.

END OF SECTION

SECTION 333109

WASTEWATER LATERAL CONNECTIONS

PART 1 – GENERAL

1.01 DESCRIPTION

A. All material, labor, equipment, tools and superintendence necessary to furnish and install Wastewater Lateral Connections in accordance with *Public Works Construction Standards,* NCTCOG, 4th Edition, Item 502.10.4.

1.02 REFERENCES

A. ASTM D3034 Standard Specification for Type PSM Polyvinyl Chloride (PVC) Sewer Pipe and Fittings, Latest Revision

B. *Public Works Construction Standards,* NCTCOG, 4th Edition, Item 502.10.4

C. City of Frisco Standard Details for Wastewater Laterals.

PART 2 – PRODUCTS

2.01 MATERIALS

A. Refer to *Public Works Construction Standards,* NCTCOG, 4th Edition, Item 501.18.

B. Wastewater laterals shall be PVC SDR 35 in accordance with ASTM D3034 or PVC SDR 26 in accordance with ASTM D2241.

PART 3 – EXECUTION

3.01 CONSTRUCTION

A. Refer to *Public Works Construction Standards,* NCTCOG, 4th Edition, Item 502.10.4.

B. The wastewater lateral shall extend from the wastewater main to the customer's property line. The elevation of the wastewater lateral at the property line shall be at such a depth that will provide for a lateral from the proposed building site with a minimum grade of one percent (1%) and a maximum grade of one and one-half percent (1.5%) from the building site to the property line. A depth in excess of six feet (6') at the property line is not approved.

C. If there is a curb, the curb shall be sawcut with "II" and marked with good quality green paint at the point where the wastewater lateral passes under the curb.

D. A standard wastewater lateral connection shall consist of the service wye or tee and necessary fittings.

E. All residential wastewater laterals shall be extended to a point ten feet (10') from the back of the property line at a maximum depth of four feet (4'). The lateral shall then be extended at a forty-five degree angle to four feet (4') above the finished grade and capped.

F. Fittings are not permitted on wastewater service laterals between the wye and the property line.

PART 4 – MEASUREMENT AND PAYMENT

4.01 MEASUREMENT

A. Refer to *Public Works Construction Standards*, NCTCOG, 4th Edition, Item 502.10.4.3.

4.02 PAYMENT

A. Refer to *Public Works Construction Standards*, NCTCOG, 4th Edition, Item 502.10.4.3.

END OF SECTION

SECTION 333110

PVC PIPE FOR GRAVITY WASTEWATER MAINS

PART 1 – GENERAL

1.01 DESCRIPTION

A. All material, labor, equipment, tools and superintendence necessary to furnish and install Polyvinyl Chloride (PVC) Pipe For Gravity Wastewater Mains in accordance with *Public Works Construction Standards*, NCTCOG, 4th Edition, Items 501.17, 505 and 507.

1.02 REFERENCES

A. ASTM D3034 Standard Specification for Type PSM Polyvinyl Chloride (PVC) Sewer Pipe and Fittings, Latest Revision

B. ASTM F679 Standard Specification for Polyvinyl Chloride (PVC) Large Diameter Plastic Gravity Sewer Pipe and Fittings, Latest Revision

C. ASTM D2321 Standard Practice for Underground Installation of Thermoplastic Pipe for Sewers and Other Gravity Flow Applications

D. *Public Works Construction Standards*, NCTCOG, 4th Edition, Items 501.17, 505 and 507

1.03 RELATED SECTIONS

A. Section 330510 – Trenching, Backfilling and Compaction

B. Section 330131 – Wastewater and Manhole Testing

C. Section 330132 – Television Inspection for Wastewater Mains

PART 2 – PRODUCTS

2.01 MATERIALS

A. Refer to *Public Works Construction Standards*, NCTCOG, 4th Edition, Items 501.17.

B. Refer to City of Frisco's Approved Material List.

C. All gravity PVC wastewater pipe shall be green in color.

PART 3 – EXECUTION

3.01 CONSTRUCTION

A. Refer to *Public Works Construction Standards*, NCTCOG, 4th Edition, Items 505 and 507.

B. The construction of all wastewater mains shall begin at the outlet or lower end, unless otherwise directed by the Inspector.

C. Appurtenances shall be constructed as soon as the wastewater main of which they are a part is constructed to their locations. Upon request by the Contractor, the Inspector may permit postponement of the construction of manholes on wastewater mains, and the Contractor shall, without additional cost to the Owner, lay the pipe continuously through the manhole location.

D. The construction of appurtenances in advance of construction of the wastewater line will not be permitted.

E. No connecting wastewater main shall project beyond the inside surface of the wastewater mains or appurtenances.

PART 4 – MEASUREMENT AND PAYMENT

4.01 MEASUREMENT

A. Refer to *Public Works Construction Standards*, NCTCOG, 4th Edition, Item 507.6.1.

4.02 PAYMENT

A. Refer to *Public Works Construction Standards*, NCTCOG, 4th Edition, Item 507.6.2.

END OF SECTION

SECTION 333115

PRESSURE RATED PVC PIPE FOR GRAVITY WASTEWATER MAINS

PART 1 – GENERAL

1.01 DESCRIPTION

A. All material, labor, equipment, tools and superintendence necessary to furnish and install Pressure Rated Polyvinyl Chloride (PVC) Pipe For Gravity Wastewater Mains in accordance with *Public Works Construction Standards*, NCTCOG, 4th Edition, Items 501.15, 505 and 507.

1.02 REFERENCES

A. ASTM D2241 Standard Specification for Polyvinyl Chloride (PVC) Pressure Rated Pipe (SDR Series), Latest Revision

B. ASTM D3139 Standard Specification for Joints for Plastic Pressure Pipes Using Flexible Elastomeric Seals, Latest Revision

C. ASTM D2321 Standard Practice for Underground Installation of Thermoplastic Pipe for Sewers and Other Gravity Flow Applications

D. *Public Works Construction Standards*, NCTCOG, 4th Edition, Items 501.15

1.03 RELATED SECTIONS

A. Section 330510 – Trenching, Backfilling and Compaction

B. Section 330131 – Wastewater and Manhole Testing

C. Section 330132 – Television Inspection for Wastewater Mains

PART 2 – PRODUCTS

2.01 MATERIALS

A. Refer to *Public Works Construction Standards*, NCTCOG, 4th Edition, Items 501.15.

PART 3 – EXECUTION

3.01 CONSTRUCTION

A. Refer to *Public Works Construction Standards*, NCTCOG, 4th Edition, Items 505 and 507.

B. The construction of all wastewater mains shall begin at the outlet or lower end, unless otherwise directed by the Inspector.

C. Appurtenances shall be constructed as soon as the wastewater main of which they are a part is constructed to their locations. Upon request by the Contractor, the Inspector may permit postponement of the construction of manholes on wastewater mains, and the Contractor shall, without additional cost to the Owner, lay the pipe continuously through the manhole location.

D. The construction of appurtenances in advance of construction of the wastewater line will not be permitted.

E. No connecting wastewater main shall project beyond the inside surface of the wastewater mains or appurtenances.

PART 4 – MEASUREMENT AND PAYMENT

4.01 MEASUREMENT

A. Refer to *Public Works Construction Standards,* NCTCOG, 4th Edition, Item 507.6.1.

4.02 PAYMENT

A. Refer to *Public Works Construction Standards,* NCTCOG, 4th Edition, Item 507.6.2.

END OF SECTION

SECTION 333130

CENTRIFUGALLY CAST FIBERGLASS REINFORCED PIPE FOR GRAVITY WASTEWATER MAINS

PART 1 – GENERAL

1.01 DESCRIPTION

A. All material, labor, equipment, tools and superintendence necessary to furnish and install Centrifugally Cast Fiberglass Reinforced Pipe For Gravity Wastewater Mains in accordance with *Public Works Construction Standards,* NCTCOG, 4th Edition, Items 501.24, 505 and 507.

1.02 REFERENCES

A. ASTM D3262 Standard Specification for "Fiberglass" (Glass-Fiber-Reinforced Thermosetting Resin) Sewer Pipe, Latest Revision

B. ASTM D4161 Standard Specification for "Fiberglass" (Glass-Fiber-Reinforced Thermosetting-Resin) Pipe Joints Using Flexible Elastomeric Seals, Latest Revision

C. ASTM D3840 Standard Specification for "Fiberglass" (Glass-Fiber-Reinforced Thermosetting-Resin) Pipe Fittings for Nonpressure Applications

D. *Public Works Construction Standards,* NCTCOG, 4th Edition, Items 501.24, 505 and 507

PART 2 – PRODUCTS

2.01 MATERIALS

A. Refer to *Public Works Construction Standards,* NCTCOG, 4th Edition, Item 501.24.

PART 3 – EXECUTION

3.01 CONSTRUCTION

A. Refer to *Public Works Construction Standards,* NCTCOG, 4th Edition, Items 505 and 507.

B. The construction of all wastewater mains shall begin at the outlet or lower end, unless otherwise directed by the Inspector.

C. Appurtenances shall be constructed as soon as the wastewater main of which they are a part is constructed to their locations. Upon request by the Contractor, the Inspector may permit postponement of the construction of manholes on wastewater mains, and the Contractor shall, without additional cost to the Owner, lay the pipe continuously through the manhole location.

D. The construction of appurtenances in advance of construction of the wastewater line will not be permitted.

E. No connecting wastewater main shall project beyond the inside surface of the wastewater mains or appurtenances.

PART 4 – MEASUREMENT AND PAYMENT

4.01 MEASUREMENT

A. Refer to *Public Works Construction Standards,* NCTCOG, 4th Edition, Item 507.6.1.

4.02 PAYMENT

A. Refer to *Public Works Construction Standards,* NCTCOG, 4th Edition, Item 507.6.2.

END OF SECTION

SECTION 333913

WASTEWATER MANHOLE FRAMES AND COVERS

PART 1 – GENERAL

1.01 DESCRIPTION

A. All material, labor, equipment, tools and superintendence necessary to furnish and install Wastewater Manhole Frames and Covers in accordance with *Public Works Construction Standards*, NCTCOG, 4th Edition, Item 502.1.3.

1.02 REFERENCES

A. ASTM A48 Standard Specification for Gray Iron Castings, Latest Revision

B. *Public Works Construction Standards*, NCTCOG, 4th Edition, Item 502.1.3

C. City of Frisco Standard Details for Manhole Lid and Frame

1.03 RELATED SECTIONS

A. Section 333914 – Cast-in-Place Concrete Manholes

B. Section 333915 – Precast Concrete Manholes

PART 2 – PRODUCTS

2.01 MATERIALS

A. Refer to *Public Works Construction Standards*, NCTCOG, 4th Edition, Item 502.1.3.

B. Refer to City of Frisco's Approved Material List.

PART 3 – EXECUTION

3.01 INSTALLATION

A. Refer to *Public Works Construction Standards*, NCTCOG, 4th Edition, Item 502.1.4.

B. All wastewater manhole covers shall be installed with inflow protection inserts.

PART 4 – MEASUREMENT AND PAYMENT

4.01 MEASUREMENT

A. Refer to *Public Works Construction Standards*, NCTCOG, 4th Edition, Item 502.1.6.

4.02 PAYMENT

A. Refer to *Public Works Construction Standards*, NCTCOG, 4th Edition, Item 502.1.6.

END OF SECTION

SECTION 333914

CAST-IN-PLACE CONCRETE MANHOLES

PART 1 – GENERAL

1.01 DESCRIPTION

A. All material, labor, equipment, tools and superintendence necessary to furnish and install Cast-In-Place Concrete Manholes in accordance with *Public Works Construction Standards*, NCTCOG, 4th Edition, Item 502.1.

1.02 REFERENCES

A. *Public Works Construction Standards*, NCTCOG, 4th Edition, Item 502.1

1.03 RELATED SECTIONS

A. Section 333913 – Wastewater Manhole Frames and Covers

B. Section 330131 – Wastewater and Manhole Testing

PART 2 – PRODUCTS

2.01 MATERIALS

A. Refer to *Public Works Construction Standards*, NCTCOG, 4th Edition, Item 502.1.4.1.1.

B. A manhole-pipe connection must use water tight, size on size resilient connectors that allow for differential settlement and must conform to ASTM C923.

C. A manhole located in a roadway or other paved area subject to vehicular traffic must meet or exceed the American Association of State Highways and Transportation Officials standard M-306 for load bearing.

PART 3 – EXECUTION

3.01 CONSTRUCTION

A. Refer to *Public Works Construction Standards*, NCTCOG, 4th Edition, Item 502.1.4.

B. For fifteen inch (15”) to twenty-seven inch (27”) wastewater mains, the manhole shall have a minimum diameter of five feet (5’).

C. For wastewater mains larger than twenty-seven inches (27”), the manhole shall have a minimum diameter of six feet (6’).

D. Manholes deeper that fifteen feet (15’) shall have a minimum diameter of five feet (5’).

E. The exterior of all concrete manholes shall be coated with bituminous waterproofing material.

PART 4 – MEASUREMENT AND PAYMENT

4.01 MEASUREMENT

A. Refer to *Public Works Construction Standards*, NCTCOG, 4th Edition, Item 502.1.6.

4.02 PAYMENT

A. Refer to *Public Works Construction Standards*, NCTCOG, 4th Edition, Item 502.1.6.

END OF SECTION

SECTION 333915

PRECAST CONCRETE MANHOLES

PART 1 – GENERAL

1.01 DESCRIPTION

A. All material, labor, equipment, tools and superintendence necessary to furnish and install Precast Concrete Manholes in accordance with *Public Works Construction Standards,* NCTCOG, 4th Edition, Item 502.1.

1.02 REFERENCES

A. ASTM C478 Standard Specification for Precast Reinforced Concrete Manhole Sections, Latest Revision

B. *Public Works Construction Standards,* NCTCOG, 4th Edition, Item 502.1

1.03 RELATED SECTIONS

A. Section 333913 – Wastewater Manhole Frames and Covers

B. Section 330131 – Wastewater and Manhole Testing

PART 2 – PRODUCTS

2.01 MATERIALS

A. Refer to *Public Works Construction Standards,* NCTCOG, 4th Edition, Item 502.1.1.1.

B. A manhole-pipe connection must use water tight, size on size resilient connectors that allow for differential settlement and must conform to ASTM C923.

C. A manhole located in a roadway or other paved area subject to vehicular traffic must meet or exceed the American Association of State Highways and Transportation Officials standard M-306 for load bearing.

PART 3 – EXECUTION

3.01 CONSTRUCTION

A. Refer to *Public Works Construction Standards,* NCTCOG, 4th Edition, Item 502.1.4.

B. For fifteen inch (15”) to twenty-seven inch (27”) wastewater mains, the manhole shall have a minimum diameter of five feet (5’).

C. For wastewater mains larger than twenty-seven inches (27”), the manhole shall have a minimum diameter of six feet (6’).

D. Manholes deeper that fifteen feet (15') shall have a minimum diameter of five feet (5').

E. The exterior of all concrete manholes shall be coated with bituminous waterproofing material.

PART 4 – MEASUREMENT AND PAYMENT

4.01 MEASUREMENT

A. Refer to *Public Works Construction Standards*, NCTCOG, 4th Edition, Item 502.1.6.

4.02 PAYMENT

A. Refer to *Public Works Construction Standards*, NCTCOG, 4th Edition, Item 502.1.6.

END OF SECTION

SECTION 333916

FIBERGLASS MANHOLES

PART 1 – GENERAL

1.01 DESCRIPTION

A. All material, labor, equipment, tools and superintendence necessary to furnish and install Fiberglass Manholes in accordance with *Public Works Construction Standards*, NCTCOG, 4th Edition, Item 502.1.

1.02 REFERENCES

A. *Public Works Construction Standards*, NCTCOG, 4th Edition, Item 502.1
B. City of Frisco's Standard Details for Fiberglass Manholes.

PART 2 – PRODUCTS

2.01 MATERIALS

A. Refer to *Public Works Construction Standards*, NCTCOG, 4th Edition, Item 502.1.1.2.
B. Requirements to Item 502.1.1.2.1 are to manufacture the fiberglass manholes as a one piece unit that includes a fiberglass bottom.
C. Requirements to Item 502.1.1.2.1 are to manufacture the fiberglass manholes with the stub-outs installed at the manufacturing plant.

PART 3 – EXECUTION

3.01 CONSTRUCTION

A. Refer to *Public Works Construction Standards*, NCTCOG, 4th Edition, Item 502.1.4.
B. Meet all requirements of TCEQ §217.55 Manholes and Related Structures.

PART 4 – MEASUREMENT AND PAYMENT

4.01 MEASUREMENT

A. Refer to *Public Works Construction Standards*, NCTCOG, 4th Edition, Item 502.1.6.

4.02 PAYMENT

A. Refer to *Public Works Construction Standards*, NCTCOG, 4th Edition, Item 502.1.6.

END OF SECTION

SECTION 334113

REINFORCED CONCRETE PIPE

PART 1 - GENERAL

1.01 DESCRIPTION

A. All material, labor, equipment, tools and superintendence necessary to furnish and install Reinforced Concrete Pipe in accordance Texas Department of Transportation *Standard Specifications for Construction and Maintenance of Highways, Streets, and Bridges* Item 464.

1.02 REFERENCES

A. TxDOT Items 400, 402, 403, 420, 464, 467, and 473
B. Section 330510 Trenching, Backfilling and Comaction

C. City of Frisco's Standard Detail for Storm Drain Embedment and Backfill.
D. TxDOT standard details included in the plans.

PART 2 - PRODUCTS

2.01 MATERIALS

A. Refer to TxDOT Item 464.2.

PART 3 - EXECUTION

3.01 PREPARATION

A. Refer to TxDOT Item 464.3. The *Excavation, Shaping, Bedding, and Backfill* section references TxDOT Item 400. The City of Frisco's Standard Detail for Standard Storm Drain Embedment and Backfill detail shall replace Figure 1 in TxDOT Item 400.

B. After compaction and subgrade preparation but prior to paving, television inspections tests are required on all storm sewer mains laterals and culverts as identified on the construction plans. The minimum information to be provided to the Owner and City's inspectors, in both text and video form, are line designation, length, slope, and joints. Acceptable video formats are VHS and DVD. Any line or lines found to be defective will be corrected and another television inspection shall be performed at the contractor's expense

PART 4 - MEASUREMENT AND PAYMENT

4.01 MEASUREMENT

A. Refer to TxDOT 464.4.

4.02 PAYMENT

A. Refer to TxDOT 464.5.

END OF SECTION

SECTION 334200

REINFORCED BOX CULVERT

PART 1 - GENERAL

1.01 DESCRIPTION

A. All material, labor, equipment, tools and superintendence necessary to furnish and install Reinforced Box Culverts in accordance with Texas Department of Transportation *Standard Specifications for Construction and Maintenance of Highways, Streets, and Bridges* Item 462.

1.02 REFERENCES

A. TxDOT Items 400, 402, 403, 420, 421, 440, 462, 464, 466, 467 and 473

B. TxDOT Standard Details included in the plans.

1.03 RELATED SECTIONS

A. Section 033105 – Concrete Structures – Cast-in-Place (TxDOT)

PART 2 - PRODUCTS

2.01 MATERIALS

A. Refer to TxDOT 462.2

PART 3 - EXECUTION

3.01 PREPARATION

A. Refer to TxDOT 462.3.

PART 4 - MEASUREMENT AND PAYMENT

4.01 MEASUREMENT

A. Refer to TxDOT 462.4.

4.02 PAYMENT

A. Refer to TxDOT 462.5.

END OF SECTION

SECTION 334913

STORM SEWER MANHOLES

PART 1 - GENERAL

1.01 DESCRIPTION

A. All material, labor, equipment, tools and superintendence necessary to furnish and install Storm Sewer Manholes in accordance with Texas Department of Transportation *Standard Specifications for Construction and Maintenance of Highways, Streets, and Bridges*-Item 465.

1.02 REFERENCES

A. TxDOT Items 421, 440, 465, and 471

B. TxDOT Standard Details included in the plans.

1.03 RELATED SECTIONS

A. Section 033105 – Concrete Structures – Cast-in-Place (TxDOT)

B. Section 034105 – Concrete Structures – Precast (TxDOT)

PART 2 - PRODUCTS

2.01 MATERIALS

A. Refer to TxDOT 465.2.

PART 3 - EXECUTION

3.01 PREPARATION

A. Refer to TxDOT 465.3.

PART 4 - MEASUREMENT AND PAYMENT

4.01 MEASUREMENT

A. Refer to TxDOT 465.4.

4.02 PAYMENT

A. Refer to TxDOT 465.5.

END OF SECTION

SECTION 334914

HEADWALLS AND WINGWALLS

PART 1 - GENERAL

1.01 DESCRIPTION

A. All material, labor, equipment, tools and superintendence necessary to furnish and install Headwalls and Wingwalls in accordance with Texas Department of Transportation *Standard Specifications for Construction and Maintenance of Highways, Streets, and Bridges*-TxDOT Item 466.

1.02 REFERENCES

A. TxDOT Items 420, 421, 430, 432, 440, 464, and 466

B. TxDOT Standard Details included in the plans.

1.03 RELATED SECTIONS

A. Section 033105 – Concrete Structures – Cast-in-Place (TxDOT)

PART 2 - PRODUCTS

2.01 MATERIALS

A. Refer to TxDOT 466.2.

PART 3 - EXECUTION

3.01 PREPARATION

A. Refer to TxDOT 466.3.

PART 4 - MEASUREMENT AND PAYMENT

4.01 MEASUREMENT

A. Refer to TxDOT 466.4.

4.02 PAYMENT

A. Refer to TxDOT 466.5.

END OF SECTION

SECTION 334915

SAFETY END TREATMENT

PART 1 - GENERAL

1.01 DESCRIPTION

A. All material, labor, equipment, tools and superintendence necessary to furnish and install Safety End Treatment in accordance with Texas Department of Transportation *Standard Specifications for Construction and Maintenance of Highways, Streets, and Bridges* -Item 467.

1.02 REFERENCES

A. TxDOT 400, 420, 421, 432, 440, 442, 445, 460, 464, and 467

B. TxDOT Standard Details included in the plans.

1.03 RELATED SECTIONS

A. Section 033105 – Concrete Structures – Cast-in-Place (TxDOT)

PART 2 - PRODUCTS

2.01 MATERIALS

A. Refer to TxDOT 467.2.

PART 3 - EXECUTION

3.01 PREPARATION

A. Refer to TxDOT 467.3.

PART 4 - MEASUREMENT AND PAYMENT

4.01 MEASUREMENT

A. Refer to TxDOT 467.4.

4.02 PAYMENT

A. Refer to TxDOT 467.5.

END OF SECTION

SECTION 334920

STANDARD AND RECESSED CURB INLETS AND OTHER INLETS

PART 1 - GENERAL

1.01 DESCRIPTION

A. All material, labor, equipment, tools and superintendence necessary to furnish and install Standard and Recessed Curb Inlets and Other Inlets in accordance with Texas Department of Transportation *Standard Specifications for Construction and Maintenance of Highways, Streets, and Bridges* Item 465.

1.02 REFERENCES

A. TxDOT Items 400, 402, 420, 424, 464, 467, and 467

B. City of Frisco's Standard Detail for Standard Storm Drain Embedment and Backfill.

C. TxDOT standard details included in the plans.

1.03 RELATED SECTIONS

A. Section 034105 – Concrete Structures – Precast (TxDOT)

B. Section 033100 - Concrete Structures – Cast-In-Place (City)

PART 2 - PRODUCTS

2.01 MATERIALS

A. Refer to TxDOT 465.2.

PART 3 - EXECUTION

3.01 PREPARATION

A. Refer to TxDOT 465.3.

PART 4 - MEASUREMENT AND PAYMENT

4.01 MEASUREMENT

A. Refer to TxDOT 465.4.

4.02 PAYMENT

A. Refer to TxDOT 465.5.

END OF SECTION

SECTION 344113

INSTALLATION OF HIGHWAY TRAFFIC SIGNAL

PART 1 - GENERAL

1.01 DESCRIPTION

A. All material, labor, equipment, tools and superintendence necessary to furnish and install a Traffic Signal in accordance with TxDOT Item 680.

1.02 REFERENCES

A. TxDOT Items 502, 610, 636, 656, 680, 684, 686, 687, 688, 6006, and 6266

B. TxDOT's Standard Details included in the plans.

C. Traffic Signal Plans

1.03 RELATED SECTIONS

A. Section 260500 – Electric Conductor

B. Section 260501 – Electric Service

C. Section 270500 – Conduit

D. Section 033101 – Drilled Shaft Foundation

E. Section 344125 – Vehicle and Pedestrian Signal Heads

F. Section 344130 – Traffic Signal Cable

G. Section 344135 – Ground Box

H. Section 347113 – Barricade, Signs, and Traffic Handling

1.04 SUBMITTALS

A. Shop Drawings for all traffic signal equipment as required by the City (5 copies).

B. Shop Drawings for street signs (except illuminated signage) (5 copies).

PART 2 - PRODUCTS

2.01 MATERIALS

A. Refer to TxDOT Items 502, 610, 636, 656, 680, 684, 686, 687, 688, 6006, and 6266.

B. The Contractor shall furnish and install the pedestal pole assemblies.

C. All traffic signal mast arm pole and pedestal pole assemblies shall be powder coated. The powder coat paint shall be RAL9017 (TRAFFIC BLACK) or City approved equal.

1. All assemblies that are to be powder coated shall be hot dipped galvanized to ASTM 123 and 153 specifications. Once galvanizing is completed, all exposed surfaces shall be mechanically etched by blast cleaning to remove mill scale, impurities and non-metallic foreign materials. All surfaces visually exposed are to be coated with a urethane or Triglycidyl (TGIC) Polyester Powder to a minimum film thickness of 2.0 mils. The coating shall be electrostatically applied and cured in a gas fired convention oven by heating the steel substrate to between 350 and 400 degrees Fahrenheit.

D. Roadway Illumination Assemblies (TxDOT Item 610):

1. Luminaire ballasts shall be rated for operation at 240 volts.
2. Luminaire lamps for this project shall be 250 Watt Metal Halide. The luminaire housings shall be powder coated using RAL 9017 (traffic black) paint or City approved equal. The covers for the luminaries shall be a clear flat-glass insert.
3. When luminaires are to be installed on steel mast arm poles, a separate terminal strip in the signal pole access compartment shall be provided. The terminal strip shall be 4 circuit Buchanan Type 104SN or Kulka Type 985-GP-4 CU or equivalent.
4. Sections of TxDOT standards RID (LUM1) and RID (LUM2) that pertain to High-Pressure Sodium (HPS) specifications are not applicable to this project.
5. The conductors from the service pole to the terminal strip shall be No. 8 XHHW wires. The conductors from the terminal strip to the luminaire shall be No. 12 XHHW wires.

E. City Furnished Material

1. Install NEMA Controller Cabinet Assembly
2. Install Illuminated Street Name Signs
3. Install VIVDS Shielded Cable
4. Install VIVDS Processor System
5. Install VIVDS Camera Assembly
6. Install VIVDS Set-up System
7. Install Opticom Cable
8. Install Opticom Detector
9. Install Opticom Discriminator Module
10. Install Ped Detect and Push Button Signs (2 Inch Push Button)
11. Install count-down ped displays
12. Install signal heads and LEDs
13. Install electrical service pedestal panel
14. Install traffic signal poles
15. Install Ethernet cable for communications equipment
16. Install Ethernet cable for PTZ camera

PART 3 - EXECUTION

3.01 INSTALLATION

A. Refer to TxDOT Items 502, 610, 636, 656, 680, 684, 686, 687, 688, 6006, and 6266.

B. This project shall consist of furnishing and installing all materials and equipment necessary for a complete signal system at the proposed location. In addition to these Items, the contractor shall be responsible for the following:

1. Furnishing and installing all signs for mounting on signal mast arms, pedestal poles, and existing sign posts. These signs shall be furnished in accordance with TxDOT Item 636 (subsidiary). Signs shall be mounted with ASTRO-SIGN BRAC or SIGNFIX Aluminum Channel or City approved equal. The standard street name signs shall have 12" upper case and 12" lower case lettering with clearview hwy 3w font (unless otherwise shown on the plans). Illuminated street name signs (ILSN) and mounting hardware will be provided by the City. The Contractor shall be responsible for installation of ILSN.

2. During the 30-day test period, the Contractor shall utilize qualified personnel to respond to and diagnose all trouble calls. The Contractor shall repair any malfunctions to signal equipment supplied on the project. A local telephone number (not subject to frequent changes) where trouble calls are to be received on a 24-hour basis shall be provided to the City by the Contractor. The Contractor's response time to reported calls shall be within a reasonable travel time from a Dallas address, but not more than two (2) hours maximum. Appropriate repairs shall be made within 24 hours. The contractor shall keep a record of each trouble call reported in the log book provided by the City. The Contractor shall notify the City of each trouble call. The error log in the malfunction management unit (MMU) shall not be cleared during the 30-day test period without the approval of the City.
3. The existing "stop" signs, shall be removed after the traffic signals are in operation and returned to the City of Frisco as noted.
4. All Opticom Cable, opticom detectors with mounting brackets, and opticom discriminator module will be provided by the City of Frisco. The contractor shall be responsible for installing and making the opticom system operational.
5. The City will furnish the traffic signal controller and cabinet. The contractor shall connect all field wiring to the controller assembly. The City will assist in determining how the detector loop lead-in cables are to be connected (i.e., series or parallel). The City will program the controller for operation, hook up the conflict monitor, detector units, and other equipment in the controller cabinet and turn on the controller. The contractor shall obtain the signal cabinet from the City of Frisco signal shop. When using City supplied controllers, the contractor shall have a qualified technician on the project site to place the traffic signals in operation.
6. All VIVDS equipment including cameras, processor system, set-up system, and VIVDS cable will be provided by the City. The contractor shall be responsible for installing and making the VIVDS operational. The City will set-up VIVDS detection zones with Contractor's assistance in aiming cameras.
7. The Contractor shall provide at least 48 hours of notice to the City for pick-up of the City supplied equipment.
8. All nuts installed on the anchor bolts for traffic signal pole assemblies need to be installed using an air impact wrench followed by two impacts from a striker wrench.
9. The Contractor shall install the traffic signal pole and mast arm assemblies furnished by the City.
10. Erection of poles, luminaries and structures located near any overhead or underground utilities shall be accomplished using established industry and utility safety practices. The Contractor shall consult with the appropriate utility company and the City prior to beginning such work.
11. The Contractor shall install the pedestrian push button assemblies furnished by the City unless otherwise noted on the plans.
12. No extra compensation will be allowed for fulfilling the requirements stated above.

PART 4 - MEASUREMENT AND PAYMENT

4.01 MEASUREMENT

A. This Item will be measured on a Lump Sum (LS) basis.

B. Contractor shall submit a Schedule of Values prior to beginning any work on this project.

4.02 PAYMENT

A. All work performed and materials furnished in accordance with this Item will be paid for at the unit price for "Installation of Highway Traffic Signal." This price is full compensation for all material, labor, equipment, tools and superintendence necessary to complete this work.

END OF SECTION

SECTION 344125

VEHICLE AND PEDESTRIAN SIGNAL HEADS

PART 1 - GENERAL

1.01 DESCRIPTION

A. All labor, equipment, tools and superintendence necessary to furnish and install Vehicle and Pedestrian Signal Heads.

1.02 REFERENCES

A. TxDOT Item 682

B. TxDOT's Standard Details included in the plans.

C. Traffic Signal Plans

1.03 RELATED SECTIONS

A. Section 344113 – Installation of Highway Traffic Signals

PART 2 - PRODUCTS

2.01 MATERIALS

A. Refer to TxDOT Item 682.

B. City furnished vehicle and pedestrian signal heads, LEDs and backplates. Contractor shall supply the mounting hardware.

PART 3 - EXECUTION

3.01 INSTALLATION

A. Refer to TxDOT Item 682.

B. The Contractor shall install all vehicle and pedestrian signal heads, LEDs, and backplates furnished by the City of Frisco.

C. No exposed cable or wiring will be permitted.

D. Signal heads mounted on poles and mast arms shall be level and plumb and aimed as directed by the City.

E. The signal head to mast arm connection must allow for adjustment about the horizontal and vertical axis

F. All mast arm mounted signal heads shall be turned down and all other signal heads shall be covered with burlap or other material approved by the City until placed into operation.

PART 4 - MEASUREMENT AND PAYMENT

4.01 MEASUREMENT

A. Refer to TxDOT Item 682.

4.02 PAYMENT

A. All work performed in accordance with this Item will be paid for at the unit bid price for "Vehicle And Pedestrian Signal Heads," at the size and type specified. This price is full compensation for all labor, equipment, tools, and superintendence necessary to complete the work.

END OF SECTION

SECTION 344130

TRAFFIC SIGNAL CABLE

PART 1 - GENERAL

1.01 DESCRIPTION

A. All material, labor, equipment, tools and superintendence necessary to furnish and install a Traffic Signal Cable.

1.02 REFERENCES

A. TxDOT Item 684

B. TxDOT's Standard Details included in the plans.

C. Traffic Signal Plans

1.03 RELATED SECTIONS

A. Section 344113 – Installation of Highway Traffic Signal

PART 2 - PRODUCTS

2.01 MATERIALS

A. Refer to TxDOT Item 684.

B. Individual conductors shall be No. 14 AWG.

PART 3 - EXECUTION

3.01 INSTALLATION

A. Refer to TxDOT Item 684.

B. The conductors in the Traffic Signal Cable shall be stranded.

C. Each cable shall be identified as shown on the plans (CABLE 1, etc.) With permanent marking labels (PANDUIT TYPE PLM STANDARD SINGLE MARKER TIE, THOMAS & BETTS TYPE 5512M or equivalent) at each ground box and controller

PART 4 - MEASUREMENT AND PAYMENT

4.01 MEASUREMENT

A. Refer to TxDOT Item 684.

4.02 PAYMENT

A. Refer to TxDOT Item 684.

END OF SECTION

SECTION 344135

GROUND BOX

PART 1 - GENERAL

1.01 DESCRIPTION

A. All material, labor, equipment, tools and superintendence necessary to furnish and install Ground Boxes for Traffic Signals and/or Street Lighting.

1.02 REFERENCES

A. TxDOT Items 421, 440 and 624

B. TxDOT's Standard Details included in the plans.

C. Traffic Signal Plans and/or Street Lighting Plans.

1.03 RELATED SECTIONS

A. Section 344113 – Installation of Highway Traffic Signal

PART 2 - PRODUCTS

2.01 MATERIALS

A. Refer to TxDOT Item 624.

B. All ground boxes used for lighting shall have "LIGHTING" and "DANGER-HIGH VOLTAGE" imprinted on the cover.

C. All ground boxes used for signals shall have "SIGNALS" and "DANGER-HIGH VOLTAGE" imprinted on the cover.

PART 3 - EXECUTION

3.01 INSTALLATION

A. Refer to TxDOT Item 624.

PART 4 - MEASUREMENT AND PAYMENT

4.01 MEASUREMENT

A. This Item shall be measured on a per Each (EA) basis for each Ground Box, complete in place.

4.02 PAYMENT

A. All work performed and materials furnished in accordance with this Item will be paid for at the unit bid price for "Ground Box," of the size and type specified. This price is full compensation for all material, labor, equipment, tools and superintendence necessary to complete the work, including installing the the ground box and concrete apron.

END OF SECTION

SECTION 344140

TEMPORARY TRAFFIC SIGNAL

PART 1 - GENERAL

1.01 DESCRIPTION

A. All material, labor, equipment, tools and superintendence necessary to furnish, install, operate, maintain, reconfigure, and remove a Temporary Traffic Signal.

1.02 REFERENCES

A. TxDOT Items 625, 627, and 681

B. TxDOT's Standard Details included in the plans.

C. Traffic Signal Plans

PART 2 - PRODUCTS

2.01 MATERIALS

A. Refer to TxDOT Items 625, 627, and 681.

PART 3 - EXECUTION

3.01 INSTALLATION

A. Refer to TxDOT Item 625, 627, and 681.

PART 4 - MEASUREMENT AND PAYMENT

4.01 MEASUREMENT

A. Refer to TxDOT Item 681.

4.02 PAYMENT

B. Refer to TxDOT Item 681.

END OF SECTION

SECTION 344150

SMALL ROADSIDE SIGN SUPPORTS AND ASSEMBLIES

PART 1 – GENERAL

1.01 DESCRIPTION

A. All material, labor, equipment, tools and superintendence necessary to furnish and install Small Roadside Sign Supports and Assemblies.

1.02 REFERENCES

A. TxDOT Items 421, 440, 441, 442, 445, 634, 636, 643, 644, and 656

B. City of Frisco and TxDOT's Standard Details included in the plans.

C. Signing Plans

PART 2 - PRODUCTS

2.01 MATERIALS

A. Refer to TxDOT Item 644.

B. The Contractor shall provide field galvanizing and metalizing equipment, per TxDOT Item 445, at all times and shall make repairs to galvanized surfaces according to these specifications at intervals as directed by the City.

C. Any signs required that on not detailed on the plan sheets shall be in conformance with the most recent Texas MUTCD and the "Standard Highway Sign Designs for Texas."

D. All small sign assemblies shall be installed as shown in the City of Frisco Standard Detail: "Sign Posts, Stop Signs, and Street Name Signs"

E. Individual units requiring cleaning shall be washed with an approved cleaning solution to remove all grease, oil, dirt, smears, streaks, debris, and other foreign particles.

PART 3 - EXECUTION

3.01 INSTALLATION

A. Refer to TxDOT Item 644.

PART 4 - MEASUREMENT AND PAYMENT

4.01 MEASUREMENT

A. Refer to TxDOT Item 644 and as indicated in the Contract Documents.

4.02 PAYMENT

A. Refer to TxDOT Item 644 and as indicated in the Contract Documents.

END OF SECTION

SECTION 347113

BARRICADES, SIGNS, AND TRAFFIC HANDLING

PART 1 - GENERAL

1.01 DESCRIPTION

A. All material, labor, equipment, tools and superintendence necessary to furnish and install Barricades, Signs, and Traffic Handling in accordance with the Contract Documents.

1.02 REFERENCES

A. TxDOT Item 502

B. TxDOT's Standard Details included in the plans.

C. City of Frisco's General Notes

PART 2 - PRODUCTS

2.01 MATERIALS

A. All traffic control devices requiring reflective sheeting shall have Type C -high specific intensity sheeting for signs with white backgrounds and Type E -fluorescent prismatic sheeting for signs with orange backgrounds.

PART 3 - EXECUTION

3.01 IMPLEMENTATION

A. Refer to TxDOT Item 502.

B. The Traffic Control Plan (TCP) shall be in accordance with the standard plan sheets WZ(BTS-1)-03 & WZ(BTS-2)-03 for signals, and as provided for in the latest edition of *Texas Manual on Uniform Traffic Control Devices for Streets and Highways* (TMUTCD).

C. Barricades and warning signs, as appropriate, shall be placed at stockpiles to adequately warn motorists. At all stockpile sites that are less than 30 feet from the edge of any traveled lane, a Type III barricade shall be erected immediately in front of or at each end if required by the City. When a stockpile site equals or exceeds 100 feet in length, one object marker (OM-2HP) per 100 feet shall be placed alongside the stockpile.

D. All traffic control signs shall be clean and legible, and maintained clean and legible throughout the construction phases.

E. The Contractor shall plan his or her work sequence in a manner that will cause the minimum interference with traffic during construction operations. Before beginning work, the Contractor shall submit, for approval by the City, a plan of construction operations outlining in detail a sequence of work to be followed, setting out the method of handling traffic along, across, and adjacent to work.

F. If, at any time during construction, the Contractor's proposed plan of operation for handling traffic does not provide for safe, comfortable movement, the Contractor shall immediately change its operations to correct the unsatisfactory condition.

G. Subject to the approval of the City and in accordance with the plans, portions of this project, which are not affected by or in conflict with the proposed method of handling traffic or utility adjustments, can be constructed during any phase.

H. During construction, the Contractor shall furnish, place, and maintain vertical panels or drums as indicated in the plans along the edge of pavements and fills in accordance with the latest edition of TMUTCD. The vertical panels shall be supplemented with lights as directed by City.

I. Barricades and signs shall be placed in such a manner as to not interfere with the sight distance of drivers entering the highway from driveways or side streets. To facilitate shifting, barricades and signs used in lane closures or traffic staging may be erected and mounted on portable supports. The designs of these supports shall be in compliance with current TxDOT and Texas MUTCD standards and are subject to the approval of the City.

J. The Contractor shall provide and maintain flaggers at such points and for such periods of time as may be required to provide for the safety and convenience of public travel and contractor's personnel, and as shown on the plans or as directed by the city. These flaggers shall be located at each end of the lane closure and shall be properly attired. The two flaggers shall be in two-way radio contact with each other at all times.

K. The Contractor will not be permitted to commence work on the road before sunrise and shall arrange his work so that no machinery or equipment shall be closer than 30 feet to the traveled roadway after sunset except as authorized by the City. The Contractor must comply with the City's Noise Ordinance at all times.

L. The Contractor shall keep traveled surfaces used in his hauling operation clear and free of dirt or other material.

M. The use of rubber-tired equipment, licensed for operation on public highways, will be required for moving dirt and other materials along or across paved surfaces.

N. Where the Contractor desires to move any equipment not licensed for operation on public highways on or across any pavement, the Contractor shall protect the pavement from all damage as directed by the City.

O. No lane closures will be allowed prior to 9:00 a.m. or after 3:30 p.m., Monday through Friday unless otherwise directed by the City.

PART 4 - MEASUREMENT AND PAYMENT

4.01 MEASUREMENT

A. This Item shall be measured on a Lump Sum (LS) basis or on a Monthly (MO) basis as indicated in the Contract Documents.

4.02 PAYMENT

A. All work performed and materials furnished in accordance with this Item will be paid for at the unit bid price for "Barricades, Signs, and Traffic Handling." This price is full compensation for all material, labor, equipment, tools and superintendence necessary to complete all work including, but not limited to, signage, barricades, flagmen, temporary pavement markers and markings, detours, and temporary pavement.

END OF SECTION

AM

APPROVED MATERIALS LIST

City of Frisco
Approved Materials List for Utilities
Last Revised May 2012
Kevin Grant (972) 292-5815

BASIC PRODUCT CATEGORY	PRODUCT SUB-CATEGORY	MANUFACTURER	MODEL, TYPE, OR STYLE APPROVED	GOVERNING SPECIFICATION	NOTES	NSF 61 CERTIFIED
Air Valves		**Manufacturer**				
Combination Air Valves	Distribution/ Transmission	Vent-O-Mat	RBX Series	AWWA C512 NCTCOG 502.6.3		NSF
Combination Air Valves	Force Mains	Vent-O-Mat	RGX Series	NCTCOG 502.6.3		
Angle Meter Valve		**Manufacturer**				
Angle Meter Valve	3/4"	Ford	BA43-333W-G-NL		Comp x Meter Tail or FL	
Angle Meter Valve	1"	Ford	BA43-444W-G-NL		Comp x Meter Tail or FL	
Angle Meter Valve	1-1/2"	Ford	FV43-666W-G-NL		Comp x Meter Tail or FL	
Angle Meter Valve	2"	Ford	FV43-777W-G-NL		Comp x Meter Tail or FL	
Angle Meter Valve	3/4"	Cambridge	210NL-H3T3		Comp x Meter Tail or FL	
Angle Meter Valve	1"	Cambridge	210NL-H4T4		Comp x Meter Tail or FL	
Angle Meter Valve	1 1/2"	Cambridge	210NL-H6MF6		Comp x FL	
Angle Meter Valve	2"	Cambridge	210NL-H7MF7		Comp x FL	
Angle Meter Valve	3/4" to 2"	A.Y. McDonald	74602BQ		Comp x Meter Tail or FL	

City of Frisco
Approved Materials List for Utilities
Last Revised May 2012
Kevin Grant (972) 292-5815

BASIC PRODUCT CATEGORY	PRODUCT SUB-CATEGORY	MANUFACTURER	MODEL, TYPE, OR STYLE APPROVED	GOVERNING SPECIFICATION	NOTES	NSF 61 CERTIFIED
Automatic Flush Point		**Manufacturer**				
Eclipse		Kupferle Foundry	9800WC - Eclipse Warm Climate			
Casing Spacers		**Manufacturer**				
Cleanout Castings		Bass & Hays	Pattern No. 339			
Cleanout Castings		Dallas Foundry	No. 349			
Cleanout Castings		Trinity Valley Iron & Steel	No. 1684			
Corporation Stop		**Manufacturer**				
Plug Type	3/4"	Ford	F1000-3	AWWA C800	AWWA Taper x Comp	
Plug Type	1"	Ford	F1000-4	AWWA C800	AWWA Taper x Comp	
Plug Type	3/4"	Cambridge	302NL-A3H3	AWWA C800	AWWA Taper x Comp	
Plug Type	1"	Cambridge	302NL-A4H4	AWWA C800	AWWA Taper x Comp	
Plug Type	3/4" to 2"	A.Y. McDonald	4701T/4701-22	AWWA C800	AWWA Taper x Comp	
Ball Type	3/4"	Ford	FB1000-3-G-NL	AWWA C800	AWWA Taper x Comp	
Ball Type	1"	Ford	FB1000-4-G-NL	AWWA C800	AWWA Taper x Comp	

City of Frisco
Approved Materials List for Utilities
Last Revised May 2012
Kevin Grant (972) 292-5815

BASIC PRODUCT CATEGORY	PRODUCT SUB-CATEGORY	MANUFACTURER	MODEL, TYPE, OR STYLE APPROVED	GOVERNING SPECIFICATION	NOTES	NSF 61 CERTIFIED
Ball Type	1-1/2"	Ford	FB1000-6-G-NL	AWWA C800	AWWA Taper x Comp	
Ball Type	2"	Ford	FB1000-7-G-NL	AWWA C800	AWWA Taper x Comp	
Ball Type	3/4"	Cambridge	301NL-A3H3	AWWA C800	AWWA Taper x Comp	
Ball Type	1"	Cambridge	301NL-A4H4	AWWA C800	AWWA Taper x Comp	
Ball Type	1-1/2"	Cambridge	301NL-A6H6	AWWA C800	AWWA Taper x Comp	
Ball Type	2"	Cambridge	301NL-A7H7	AWWA C800	AWWA Taper x Comp	
Ball Type	3/4" to 2"	A.Y. McDonald	74701BQ	AWWA C800	AWWA Taper x Comp	
Coupling Straight		**Manufacturer**				
Coupling Transition		**Manufacturer**				
Curb Stop		**Manufacturer**				

City of Frisco
Approved Materials List for Utilities
Last Revised May 2012
Kevin Grant (972) 292-5815

BASIC PRODUCT CATEGORY	PRODUCT SUB-CATEGORY	MANUFACTURER	MODEL, TYPE, OR STYLE APPROVED	GOVERNING SPECIFICATION	NOTES	NSF 61 CERTIFIED
Fire Hydrants		**Manufacturer**				
Fire Hydrant		American Flow Control	5 1/4" Waterous Pacer	AWWA C502	Rain cap Required	NSF
Fire Hydrant		American Flow Control	5 1/4" American Darling B-84-B-5	AWWA C502	Rain cap Required	NSF
Fire Hydrant Paint (Entire Hydrant)	All Main Sizes	Tnemec	Series 530 Omnithane		Aluminum	
Fire Hydrant Paint (Top bonnett, lip and nozzle caps)	6" Main Size	Tnemec	Series 530 Omnithane		Aluminum	
Fire Hydrant Paint (Top bonnett, lip and nozzle caps)	8" Main Size	Tnemec	Series 2H		True Blue / Safety	
Fire Hydrant Paint (Top bonnett, lip and nozzle caps)	12" and Larger Main Size	Tnemec	Series 2H		Yellow / Safety	
Fire Hydrant Extension		**Manufacturer**				
Fire Hydrant Extension		Match Hydrant Manufacturer			Breakaway coupler shall be located per manufacturer recommendation	
Fire Hydrant Reflector		**Manufacturer**				
Fire Hydrant Reflector		Stimsonite	C88-AB		Blue	
Fittings		**Manufacturer**				
Ductile Iron Fittings		American, U.S. Pipe, Griffin, Tyler Pipe	Full Body or Compact	AWWA C110/ AWWA C153	Distribution/ Transmission	NSF

City of Frisco
Approved Materials List for Utilities
Last Revised May 2012
Kevin Grant (972) 292-5815

BASIC PRODUCT CATEGORY	PRODUCT SUB-CATEGORY	MANUFACTURER	MODEL, TYPE, OR STYLE APPROVED	GOVERNING SPECIFICATION	NOTES	NSF 61 CERTIFIED
Flange Adapters		**Manufacturer**				
Flange Coupling Adapter		**Manufacturer**				
Flange Reducing Coupling Adapter		**Manufacturer**				
Large Service Hatches		**Manufacturer**				
Manhole Appurt.		**Manufacturer**				
Manhole Ring and Cover	32" Opening	Certainteed	Pamrex		Hinged / With Logo	
Manhole Ring and Cover	30" Opening	EJIW	BH HM - 30		Hinged / With Logo	
Manhole to Pipe Connectors	6" to 15"	Trelleborg	Kor-N-Seal I 106/406 Series	ASTM C923	Precast Manholes	
Manhole to Pipe Connectors	18" to 48"	Trelleborg	Kor-N-Seal II 206 Series	ASTM C923	Precast Manholes	
Manhole to Pipe Connectors	8" to 48"	A-LOK Products	A-LOK Premium	ASTM C923	Precast Manholes	
Manhole to Pipe Connectors	8" to 48"	A-LOK Products	A-LOK Fiberglass Field Sleeve	ASTM C923	Cast-In-Place Manholes	
Manhole Waterproofing Material	16 mils	Carboline	Bitumastic 300M	AWWA C210	Precast / Cast-In-Place	

City of Frisco
Approved Materials List for Utilities
Last Revised May 2012
Kevin Grant (972) 292-5815

BASIC PRODUCT CATEGORY	PRODUCT SUB-CATEGORY	MANUFACTURER	MODEL, TYPE, OR STYLE APPROVED	GOVERNING SPECIFICATION	NOTES	NSF 61 CERTIFIED
Pipe Material		**Manufacturer**				
Ductile Iron Pipe	16" to 48"	American, U.S. Pipe, Griffin	Pressure Class 150, 250, 300, 350	AWWA C151	Distribution/ Transmission	NSF
PVC Pipe	6" to 30"	Various Manufacturers	DR-14, DR-18	AWWA C900 AWWA C905	Distribution/ Transmission	NSF
PVC Pipe	6" to 15"	Various Manufacturers	SDR 26 (PS 115) SDR 35 (PS 46)	ASTM D3034	Non-pressure Wastewater	
PVC Pipe	18" to 48"	Various Manufacturers	PS 115	ASTM F679	Non-pressure Wastewater	
PVC Pipe	18" to 48"	Various Manufacturers	Closed Profile (PS 46)	ASTM F1803	Non-pressure Wastewater	
PVC Pipe	6" to 12"	Various Manufacturers	SDR 26 (Pressure rated 160 psi)	ASTM D2241	Pressure Wastewater; White in Color	
PVC Pipe	16" to 42"	Various Manufacturers	DR-25	AWWA C905	Pressure Wastewater; White in Color	
Fiberglass Pipe	18" to 72"	Hobas, Future, Ameron	PS 46	ASTM D3262	Non-pressure Wastewater	
Pipe Lubricant		**Manufacturer**				
Polywrap		**Manufacturer**				
Polyethylene Encasement	Ductile Iron Pipe and Fittings	Various Manufacturers	8 mils	AWWA C105		
Adhesive Tape	2" Wide	Polyken	Scotchrap No. 50			

City of Frisco
Approved Materials List for Utilities
Last Revised May 2012
Kevin Grant (972) 292-5815

BASIC PRODUCT CATEGORY	PRODUCT SUB-CATEGORY	MANUFACTURER	MODEL, TYPE, OR STYLE APPROVED	GOVERNING SPECIFICATION	NOTES	NSF 61 CERTIFIED
Retainer Glands		**Manufacturer**				
Retainer Glands	For MJ DI Pipe Up to 36"	Uni-Flange	Series 1400-D	AWWA C600 NCTCOG 502.4		NSF
Retainer Glands	For MJ DI Pipe Up to 48"	Ebba Iron	Megalug Series 1100, 1100SD	AWWA C600 NCTCOG 502.4		NSF
Retainer Glands	For MJ PVC Pipe Up to 24"	Uni-Flange	Series 1500, 1500-C	AWWA C600 NCTCOG 502.4		NSF
Retainer Glands	For MJ PVC Pipe Up to 24"	Ebba Iron	Megalug Series 2000PV	NCTCOG 502.4		NSF
Reclaimed Water Meter		**Manufacturer**				
	1"-6"	Neptune (sole source)			No Lead	
Reclaimed Water Meter Boxes		**Manufacturer**				
water meter box	1"	DFW Plastics	DFW36C-12-5BA		purple	
water meter box	11/2" or 2"	DFW Plastics	DFW1730F-18-5BA		purple	
Service Saddles		**Manufacturer**				
Service Saddle	3/4" to 2"	Ford	Style 202B		Brass with double bronze straps	
Service Saddle	3/4" to 2"	Cambridge	Series 810		Brass with double bronze straps	
Service Saddle	3/4" to 2"	A.Y. McDonald	Model #3825		Brass with double bronze straps	

City of Frisco
Approved Materials List for Utilities
Last Revised May 2012
Kevin Grant (972) 292-5815

BASIC PRODUCT CATEGORY	PRODUCT SUB-CATEGORY	MANUFACTURER	MODEL, TYPE, OR STYLE APPROVED	GOVERNING SPECIFICATION	NOTES	NSF 61 CERTIFIED
Tapping Sleeve		**Manufacturer**				
Tapping Sleeve	For DI, CI, PVC Up to 24"	Mueller	Model #H-615	AWWA C600	Gray or DI, Full Bodied	NSF
Tapping Sleeve	For DI Up to 36"	American	Series 2800	AWWA C600	DI Full Bodied	NSF
Tapping Sleeve	For CI or DI 14" to 36"	American	Series 1004	AWWA C600	DI Full Bodied	NSF
Tapping Sleeve	For DI, CI, PVC Up to 36"	U.S. Pipe	T-9	AWWA C600	DI Full Bodied	NSF
Tapping Sleeve	20" and Larger	Smith-Blair	Style 623	AWWA C600	Stainless Steel	NSF
Valves		**Manufacturer**				
Gate Valve	6" to 12" 150 psi test	Mueller	2360 Series	AWWA C509	Distribution	NSF
Gate Valve	16" to 24" 150 psi test	M&H	Style 4067	AWWA C509	Distribution	NSF
Gate Valve	6" to 16" 150 psi test	M&H	Style 7571	AWWA C515	Distribution	NSF
Gate Valve	6" to 12" 150 psi test	American Flow Control	Series 2500	AWWA C509	Distribution	NSF
Butterfly Valve	16" to 48"	Mueller	3211 Series	AWWA C504	Distribution/ Transmission	NSF
Butterfly Valve	16"to 24"	M&H	Style 4500	AWWA C504	Distribution/ Transmission	NSF
Butterfly Valve	30" to 48"	M&H	Style 1450	AWWA C504	Distribution/ Transmission	NSF
Plug Valve (Eccentric)	4" to 24"	M&H	Style 1820	AWWA C504 AWWA C505		NSF

City of Frisco
Approved Materials List for Utilities
Last Revised May 2012
Kevin Grant (972) 292-5815

BASIC PRODUCT CATEGORY	PRODUCT SUB-CATEGORY	MANUFACTURER	MODEL, TYPE, OR STYLE APPROVED	GOVERNING SPECIFICATION	NOTES	NSF 61 CERTIFIED
Valve Stack		**Manufacturer**				
Valve Stack	3 piece screw type	Mueller	No. H-10360			
Valve Box Insert		**Manufacturer**				
Valve Box Insert		Parsons Environmental	Valve Box Insert	ASTM D1248	5 1/4" SRC	
Water Meter AMR Lids		**Manufacturer**				
	18" x 18"	DFW Plastics	DFW18 AMR ISF	ASTM C857-95		
	28" x 18"	DFW Plastics	DFW 20 CTL	ASTM C857-95		
Water Meter Vaults		**Manufacturer**				
Domestic Meter Vault	3" to 6" Meter	Park Environmental Equipment Co.	Precast Concrete		Galvanized Steel Hatchway	
Double Detector Check Fire Meter Vault	4" to 10" Meter	Park Environmental Equipment Co.	Precast Concrete		Aluminum Hatchway	
Water Meter Boxes		**Manufacturer**				
Water Meter Boxes	1"	DFW Plastics	DFW-1818 TEX-EJ-15F			
Water Meter Boxes	1-1/2" to 2"	DFW Plastics	DFW-2818-CIRTR			
Water Meter Boxes	1"	DFW Plastics	DFW-37C-KSBSM		Reclaimed only (Purple)	
Water Meter Boxes	1-1/2" to 2"	DFW Plastics	D1730 -18-KSBSM		Reclaimed only (Purple)	

City of Frisco
Approved Materials List for Utilities
Last Revised May 2012
Kevin Grant (972) 292-5815

BASIC PRODUCT CATEGORY	PRODUCT SUB-CATEGORY	MANUFACTURER	MODEL, TYPE, OR STYLE APPROVED	GOVERNING SPECIFICATION	NOTES	NSF 61 CERTIFIED
Water Meter Couplings		**Manufacturer**				
Water Services		**Manufacturer**				
HDPE Water Service Pipe	3/4" to 2"	Endot Industries	EndoTrace	AWWA C901 ASTM D2239	Blue with Tracer wire	NSF

City of Frisco
Approved Materials List for Grass in
Detention Ponds, Swales, Bio-retention Areas

Last Revised May 2012

Darell Bagley (972) 292-5352

Grass/Turf			
Common Name	**Scientific Name**	**Acceptable Form**	**Remarks**
Prairie Cordgrass	*Spartina pectinata*	Container/ seed	Bottom
Bushy bluestem	*Andropogon glomeratus*	Container/ seed	Bottom
Crowfoot Caric Sedge	*Carex crus-corvi*	Container/ seed	Bottom
Eastern Gramagrass	*Tripsacum dactyloides*	Container/ seed	Bottom
Lowland Switchgrass	*Panicum virgatum L.*	Container/ seed	Bottom
Alamo Switchgrass	*Panicum virgatum 'Alamo'*	Container/ seed	Bottom
Lometa Indiangrass	*Sorghastrum nutans 'Lometa'*	Container/ seed	Slope
Earl Big Bluestem	*Andropogon gerardii 'Earl'*	Container/ seed	Slope
Little Bluestem	*Schizachyrium scoparium*	Container/ seed	Slope
Canada Wildrye	*Elymus canadensis*	Container/ seed	Slope
Spring Obedient Plant	*Physostegia intermedia*	Container/ seed	Slope
Maximilian Sunflower	*Helianthus maximiliana*	Container/ seed	Slope
Halberd-leaf Hibiscus	*Hibiscus laevis*	Container/ seed	Slope
Haskell Sideoats Grama	*Bouteloua curtipendula*	Container/ seed	Slope

City of Frisco
Approved Materials List for Grass in Medians and Parkways
Last Revised May 2012
Bobby Johnson (972) 292-6503

Grass/Turf			
Common Name	**Scientific Name**	**Acceptable Form**	**Remarks**
Buffalograss	*Bouteloua dactyloides*	Sod	Native
Bermudagrass	*Cynodon dactylon*	Sod or hydromulch	Adapted

City of Frisco
Approved Materials List for Trees in Medians and Parkways
Last Revised May 2012
Bobby Johnson (972) 292-6503

TREES (LARGE SHADE)				
Common Name	**Scientific Name**	**Container Size to be Planted**	**Maximum Mature Size**	**Remarks**
Oak, Chinquapin	*Quercus muehlenbergii*	See Plans	80' h 80' w	Native

TREES (MEDIUM SHADE)				
Common Name	**Scientific Name**	**Container Size to be Planted**	**Maximum Mature Size**	**Remarks**
Bald Cypress	*Taxodium distichum*	See Plans	80' h 50' w	Native
Elm, Cedar	*Ulmus crassifolia*	See Plans	90' h 80' w	Native
Pistachio, Chinese	*Pistacia chinensis*	See Plans	70' h 50' w	Adapted

TREES (SMALL ORNAMENTAL)				
Common Name	**Scientific Name**	**Container Size to be Planted**	**Maximum Mature Size**	**Remarks**

TREES (LIVING SCREEN)				
Common Name	**Scientific Name**	**Container Size to be Planted**	**Maximum Mature Size**	**Remarks**
Holly, Foster	*Ilex x attenuata 'Fosteri'*	See Plans	20' h 10' w	Adapted
Holly, Nellie R.Stevens	*Ilex x 'Nellie Stevens'*	See Plans	25' h 15' w	Adapted

City of Frisco
Approved Materials List for Shrubs in Medians and Parkways
Last Revised May 2012
Bobby Johnson (972) 292-6503

SHRUBS				
Common Name	**Scientific Name**	**Container Size to be**	**Maximum Mature Size**	**Remarks**
Dwarf Crape Myrtle	*Lagerstroemia indica*	See Plans	3' h 3' w	Dwarf
Dwarf Nandina	*Nandina domestica*	See Plans	3' h 3' w	Dwarf
Dwarf Yaupon Holly	*Ilex vomitoria 'Nana'*	See Plans	3' h 3' w	Dwarf
Hawthorn, Indian	*Rhaphiolepsis indica*	See Plans	3' h 4' w	Adapted
Red Yucca	*Hesperaloe parviflora*	See Plans	3' h 3' w	Native
Texas Sage, Silverado	*Leucophyllum frutescens 'Silverado'*	See Plans	4' h 4' w	Native

City of Frisco
Approved Materials List for Irrigation
Last Revised May 2012
Bill Straw (972) 292-6504

BASIC PRODUCT CATEGORY	SUB-CATEGORY	MANUFACTURER	MODEL, TYPE, OR STYLE APPROVED	SPECIFICATION	NOTES	NSF 61 CERTIFIED
Rotors		Hunter, Rainbird, Toro	High Efficiency			
Spray Nozzels (Turf Areas)		Hunter, Rainbird, Toro	High Efficiency			
Shrub Nozzle Adapter (Plant Bed Areas)		Rainbird				
Shrub Nozzles (Plant Bed Areas)		Riggs	SN8-24			
Brass Gate Valve, Domestic Manufacturer		Nibco	T-113			
Drip Irrigation		Netafim	Unitechline or Techline			
Solenoid Valve w/ DC Latching Solenoid		Rain Bird	PEB-PRS-B Series			
Quick Coupling Valves		Rain Bird	Model 44RC			
PVC Ball Valves		Spears or Approved Equal	Compact Unit			
Backflow Preventer		Febco	Double Check Valve			
Double Check Box			Plastic "Jumbo" DCA			
Valve Box		DFW Plastics	DFW65C-14-PKSPSM (Reclaim Water)			
D1730-18-PKSPSM (Reclaim Water)						
Quick Coupler Valve Box		Ametek	Purple 10" Circular Box w/ Purple Lid			
PVC Solvent and Purple Tinted Primer		IPS	P-70/PVC Purple Tinted			

SD

STANDARD CONSTRUCTION DETAILS

Standard Construction Details

Table of Contents

Detail No.	Description	Date
GENERAL		
G01	Project Sign	March 2012
PAVING		
P01	Thoroughfare Classes "A" Through "G" – Typical Section (with Moisture Conditioning)	March 2012
P02	Thoroughfare Classes "C" Through "G", Alleys, Firelanes – Typical Section (without Moisture Conditioning)	March 2012
P03	Typical Pavement Reinforcement and Concrete Curb	March 2012
P04	Existing Concrete Pavement Widening	March 2012
P05	Concrete Pavement – Jointing Layout	March 2012
P06	Concrete Pavement – Construction Joints	March 2012
P07	Concrete Pavement – Expansion Joint	March 2012
P08	Concrete Street Headers	March 2012
P09	Monolithic Median Nose – Type 1	March 2012
P10	Monolithic Median Nose – Type 2	March 2012
P11	Median Nose with Pavers	March 2012
P12	Commercial Driveway Approach	March 2012
P13	Residential Driveway Approach with Vertical Sawcut	March 2012
P14	Residential Driveway Approach with Horizontal Sawcut	March 2012
P15	*Alley Approach - RESERVED*	*TBD*
P16	*Alley Geometrics – Types "A" & "B"- RESERVED*	*TBD*
P17	*Alley Geometrics – Types "C" & "D"- RESERVED*	*TBD*
P18	*Alley Geometrics – Types "E" & "F" - RESERVED*	*TBD*
P19	*Alley Geometrics – Types "G" & "H"- RESERVED*	*TBD*
P20	*Alley Geometrics – Type "J" – RESERVED*	*TBD*
P21	Speed Table	March 2012
P22	Reinforced Concrete Sidewalk	March 2012
P23	*Directional Barrier Free Ramps – RESERVED*	*TBD*
TRAFFIC		
T01	Pavement Markings and Markers – Sheet 1 of 3	March 2012
T02	Pavement Markings and Markers – Sheet 2 of 3	March 2012
T03	*Pavement Markings and Markers – Sheet 3 of 3 – RESERVED*	*TBD*
T04	Sign Post	March 2012
T05	Road Closed Barricade	March 2012
T06	Stop Signs and Stop Bars	March 2012
T07	*Sign and Street Light Placement – RESERVED*	*TBD*
T08	Street Name Blade	March 2012
DRAINAGE		
D01	Curbed Flume	March 2012
D02	Standard Curb Inlet – Sheet 1 of 2	March 2012
D03	Standard Curb Inlet – Sheet 2 of 2	March 2012
D04	Recessed Curb Inlet – Sheet 1 of 2	March 2012

D05	Recessed Curb Inlet – Sheet 2 of 2	March 2012
D06	Center Support Beam and Inlet Section for Recessed & Standard Inlets	March 2012
D07	Inlet Lid Detail and General Notes	March 2012

UTILITY

U01	*Embedment "A" – RESERVED*	*TBD*
U02	Embedment "B" (Storm)	March 2012
U03	Embedment "B+" (Water)	April 2012
U04	Embedment "B-1" (Wastewater)	April 2012
U05	Embedment "C+"	April 2012
U06	Embedment "G"	March 2012
U07	Embedment "H" (Wastewater)	March 2012
U08	Infiltration Protection – Conduit Under Channel	March 2012
U09	Casing Spacers	March 2012

WATER

W01	Horizontal Thrust Block at Pipe Bend - Sheet 1 of 3	March 2012
W02	Horizontal Thrust Block at Pipe Bend - Sheet 2 of 3	March 2012
W03	Horizontal Thrust Block at Pipe Bend - Sheet 3 of 3	March 2012
W04	*Horizontal Thrust Block at Tees and Plugs – RESERVED*	*TBD*
W05	Vertical Thrust Block at Pipe Bend	March 2012
W06	Thrust Block – General Notes	March 2012
W07	Gate Valve	March 2012
W08	Butterfly Valve	March 2012
W09	*Combination Air Vacuum Valve Type "1", Air Vent - RESERVED*	*TBD*
W10	Blow Off Valve	March 2012
W11	Flush Point	September 2011
W12	Fire Hydrant	March 2012
W13	Fire Hydrant Installation	March 2012
W14	Pipe Bollard	March 2012
W15	Residential Service Locations	March 2012
W16	Typical Service Connection	March 2012
W17	Domestic Water Meter Vault	March 2012
W18	Double Detector Check Fire Vault	March 2012
W19	Double Detector Check Fire Vault and F.D.C.	March 2012
W20	Water Main Lowering Below Wastewater Main	March 2012
W21	Offsite Water Main Marker	March 2012

WASTEWATER

S01	Standard Cast-In-Place Manhole	March 2012
S02	Precast Concrete Manhole	March 2012
S03	Manhole to Pipe Resilient Connector	March 2012
S04	Vented Type S Manhole	March 2012
S05	Pressure Manhole Lid and Frame	March 2012
S06	Manhole Drop Connection	March 2012
S07	Wastewater Manhole Line Intersection	March 2012
S08	Wastewater Manhole False Bottom	March 2012
S09	Manhole Abandonment	March 2012
S10	Wastewater Main Cleanout	March 2012
S11	Wastewater Lateral	March 2012
S12	Offsite Wastewater Marker	March 2012

LANDSCAPING

L01	Tree Planting (Single-Trunk)	March 2012
L02	Tree Planting (Multi-Trunk)	March 2012
L03	Shrub Planting	March 2012
L04	Groundcover Planting	March 2012
L05	Tree Protection	March 2012
L06	Concrete Mow Strip	March 2012
L07	Steel Edging	March 2012

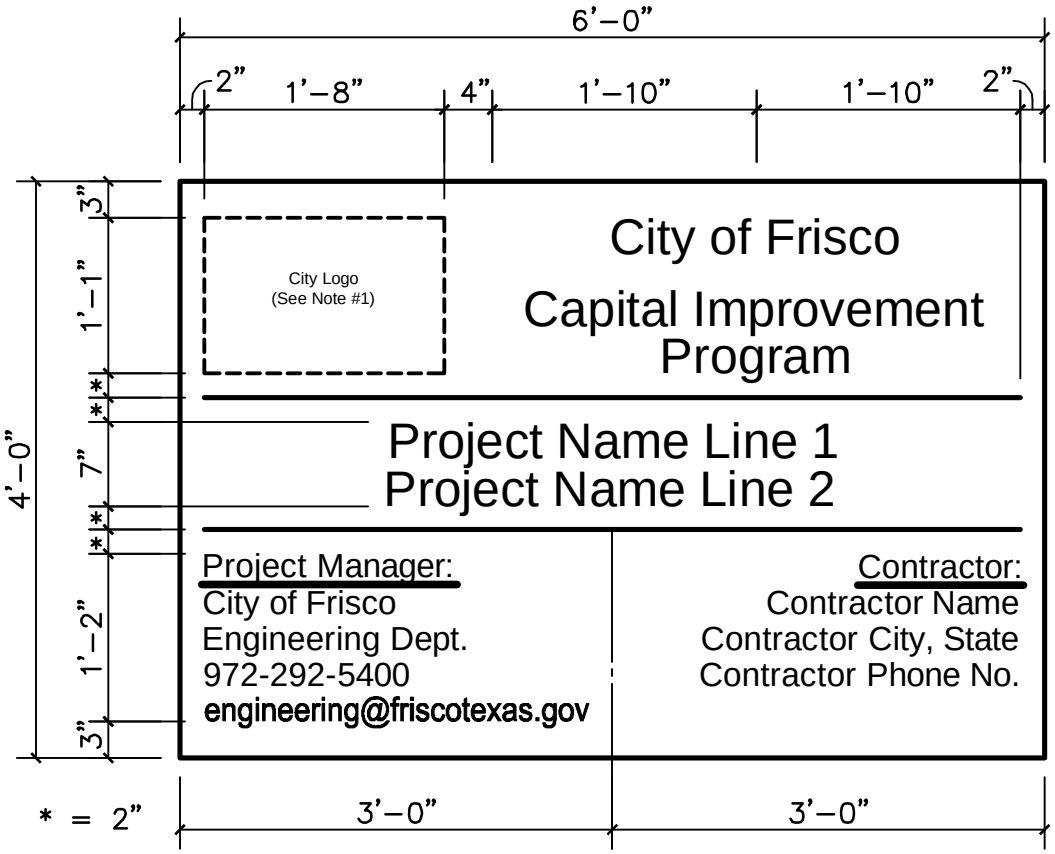

NOTES:

1. LOGO AVAILABLE FROM CITY OF FRISCO BY REQUEST. LOGO COLOR SHALL BE PMS 1795 (0C/94M/100Y/0K). TAG LINE COLOR SHALL BE BLACK.
2. SIGN SHALL HAVE A WHITE BACKGROUND WITH BLACK LETTERING. LETTERING (EXCEPT LOGO) SHALL BE ARIAL FONT.
3. SIGN LAYOUT SHALL BE APPROVED BY CITY PRIOR TO FABRICATION.
4. SIGN MAY BE SKID MOUNTED OR POST MOUNTED. CONTRACTOR IS RESPONSIBLE FOR REMOVING SIGN STRUCTURE AND RESTORING GROUND PRIOR TO FINAL ACCEPTANCE.
5. REFER TO TECHNICAL SPECIFICATION 015813.

FRISCO PROGRESS IN MOTION.	STANDARD CONSTRUCTION DETAIL **PROJECT SIGN**	SCALE: 3/4"=1'–0" REVISED: MAR 2012 G01

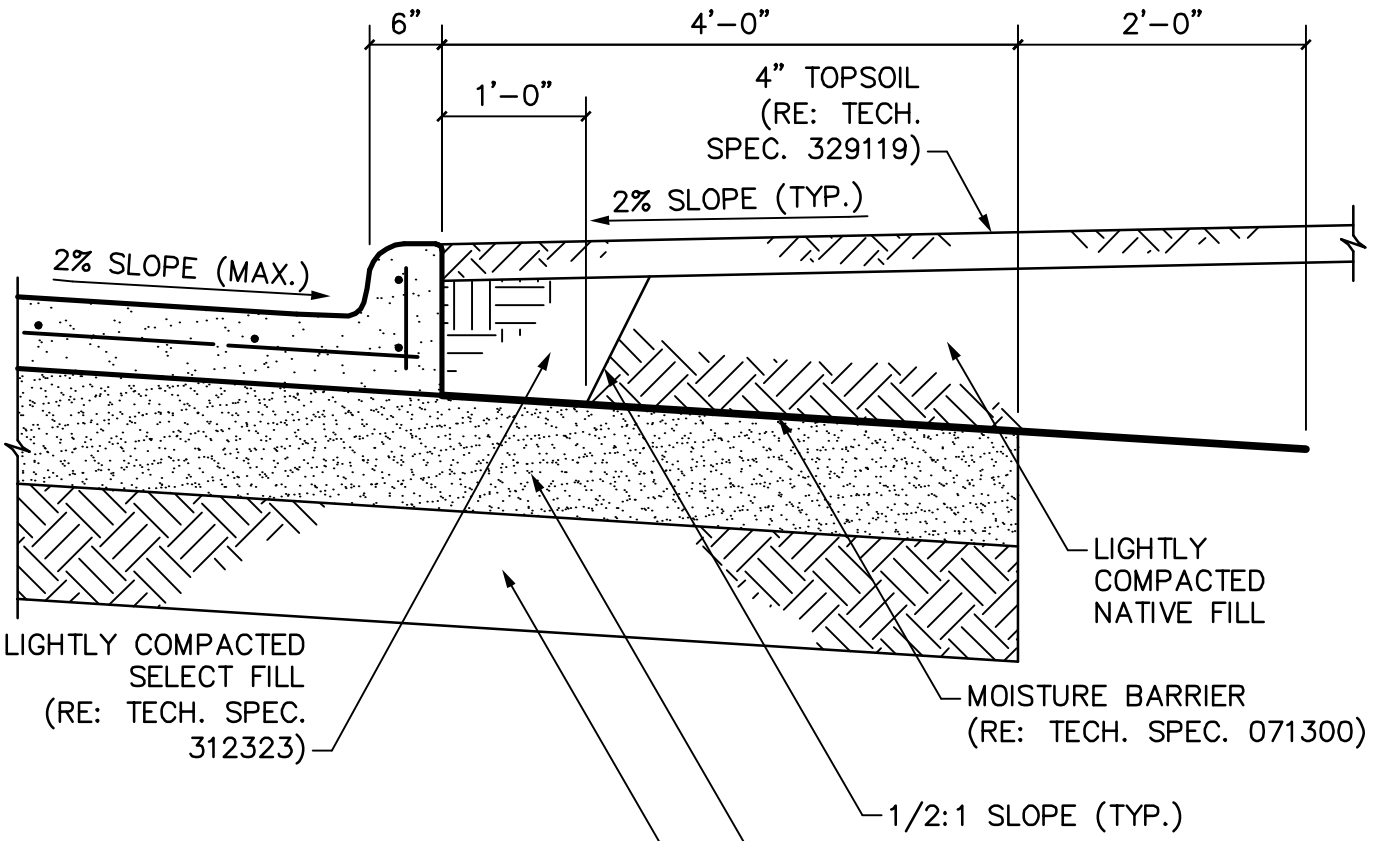

	ROW WIDTH	PAVEMENT WIDTH (FACE TO FACE)
TYPE A	120'	DIVIDED–36' EACH WAY
TYPE B	90'	DIVIDED–24' EACH WAY
TYPE C	60'	36'
TYPE D	60'	36'
TYPE E	50'	26'
TYPE F	60'	30'
TYPE G	60'	26'

NOTES:

1. REFER TO TECHNICAL SPECIFICATION 321313 FOR CONCRETE PAVEMENT.
2. REFER TO DETAIL P03 FOR CONCRETE PAVEMENT REINFORCEMENT.
3. CARE SHALL BE TAKEN NOT TO RIP OR TEAR THE MOISTURE BARRIER DURING PLACEMENT OF THE COVER FILL.

FRISCO
PROGRESS IN MOTION.

STANDARD CONSTRUCTION DETAIL
THOROUGHFARE CLASSES "A" THROUGH "G"
TYPICAL SECTION (WITH MOISTURE CONDITIONING)

SCALE: 3/4"=1'–0"
REVISED: MAR 2012
P01

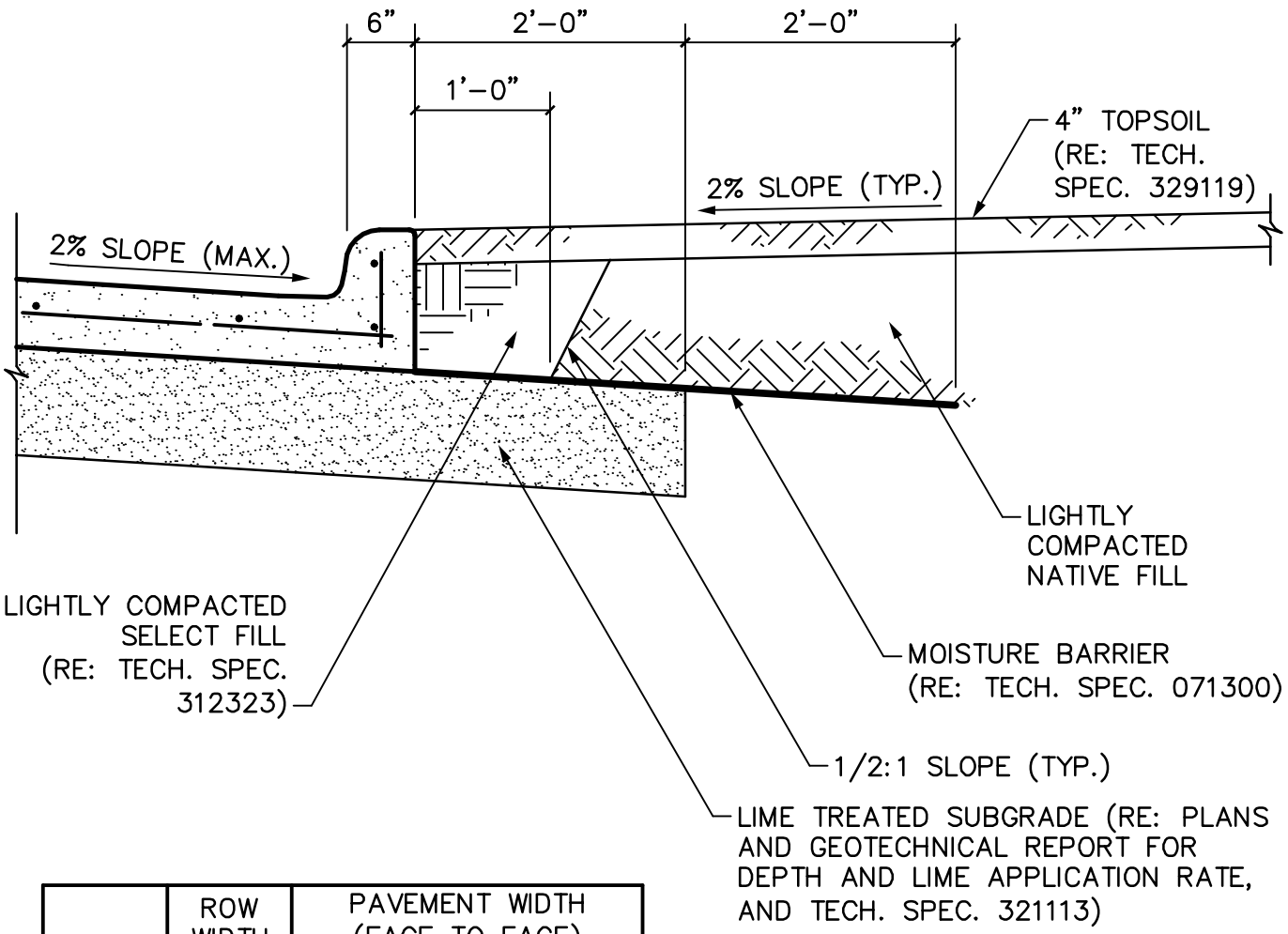

	ROW WIDTH	PAVEMENT WIDTH (FACE TO FACE)
TYPE A	120'	DIVIDED–36' EACH WAY
TYPE B	90'	DIVIDED–24' EACH WAY
TYPE C	60'	36'
TYPE D	60'	36'
TYPE E	50'	26'
TYPE F	60'	30'
TYPE G	60'	26'

NOTES:

1. REFER TO TECHNICAL SPECIFICATION 321313 FOR CONCRETE PAVEMENT.
2. REFER TO DETAIL P03 FOR CONCRETE PAVEMENT REINFORCEMENT.
3. CARE SHALL BE TAKEN NOT TO RIP OR TEAR THE MOISTURE BARRIER DURING PLACEMENT OF THE COVER FILL.

FRISCO PROGRESS IN MOTION.

STANDARD CONSTRUCTION DETAIL

THOROUGHFARE CLASSES "C" THROUGH "G"

TYPICAL SECTION (WITHOUT MOISTURE CONDITIONING)

SCALE: 3/4"=1'–0"

REVISED: MAR 2012

P02

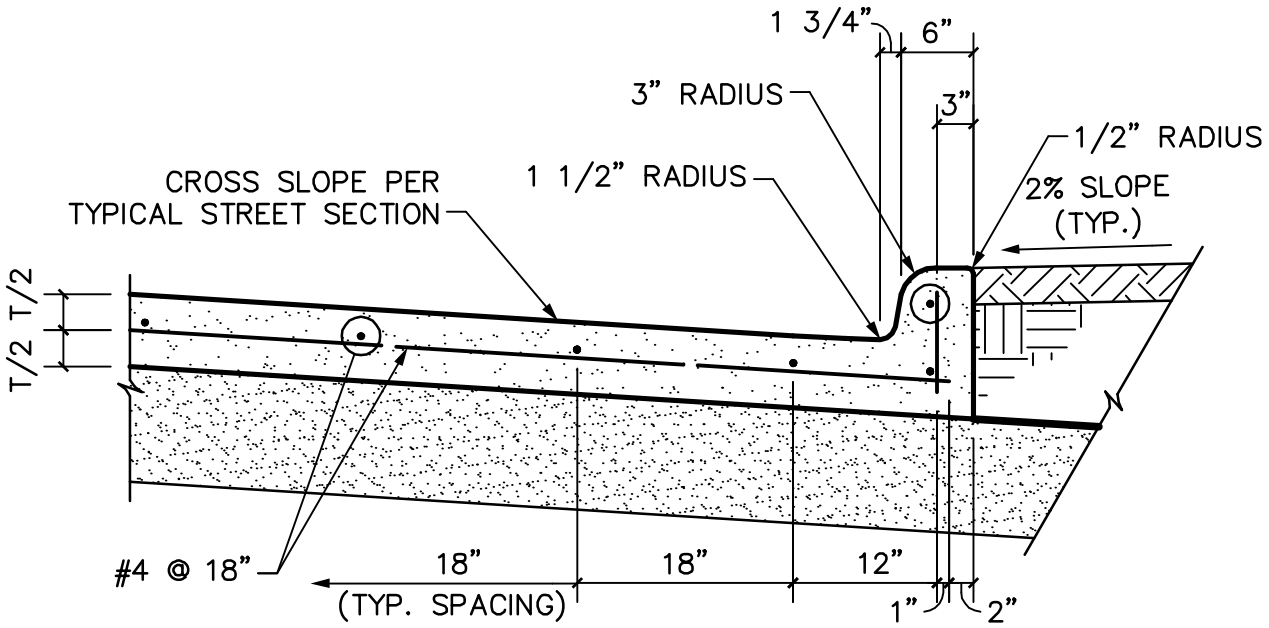

NOTES:

1. REFER TO TECHNICAL SPECIFICATION 321313 FOR CONCRETE PAVEMENT.
2. ALL REINFORCING STEEL SHALL BE #4 DEFORMED STEEL BARS CONFORMING TO ASTM A615 (GRADE 60) IN ACCORDANCE WITH TECHNICAL SPECIFICATION 032100.
3. INITIAL TRANSVERSE REINFORCING STEEL SPACING SHALL BE 12".
4. INITIAL LONGITUDINAL REINFORCING STEEL SPACING SHALL BE 12" AS SHOWN ABOVE.

FRISCO PROGRESS IN MOTION.	STANDARD CONSTRUCTION DETAIL **TYPICAL PAVEMENT REINFORCEMENT AND CONCRETE CURB**	SCALE: 3/4"=1'-0" REVISED: MAR 2012 P03

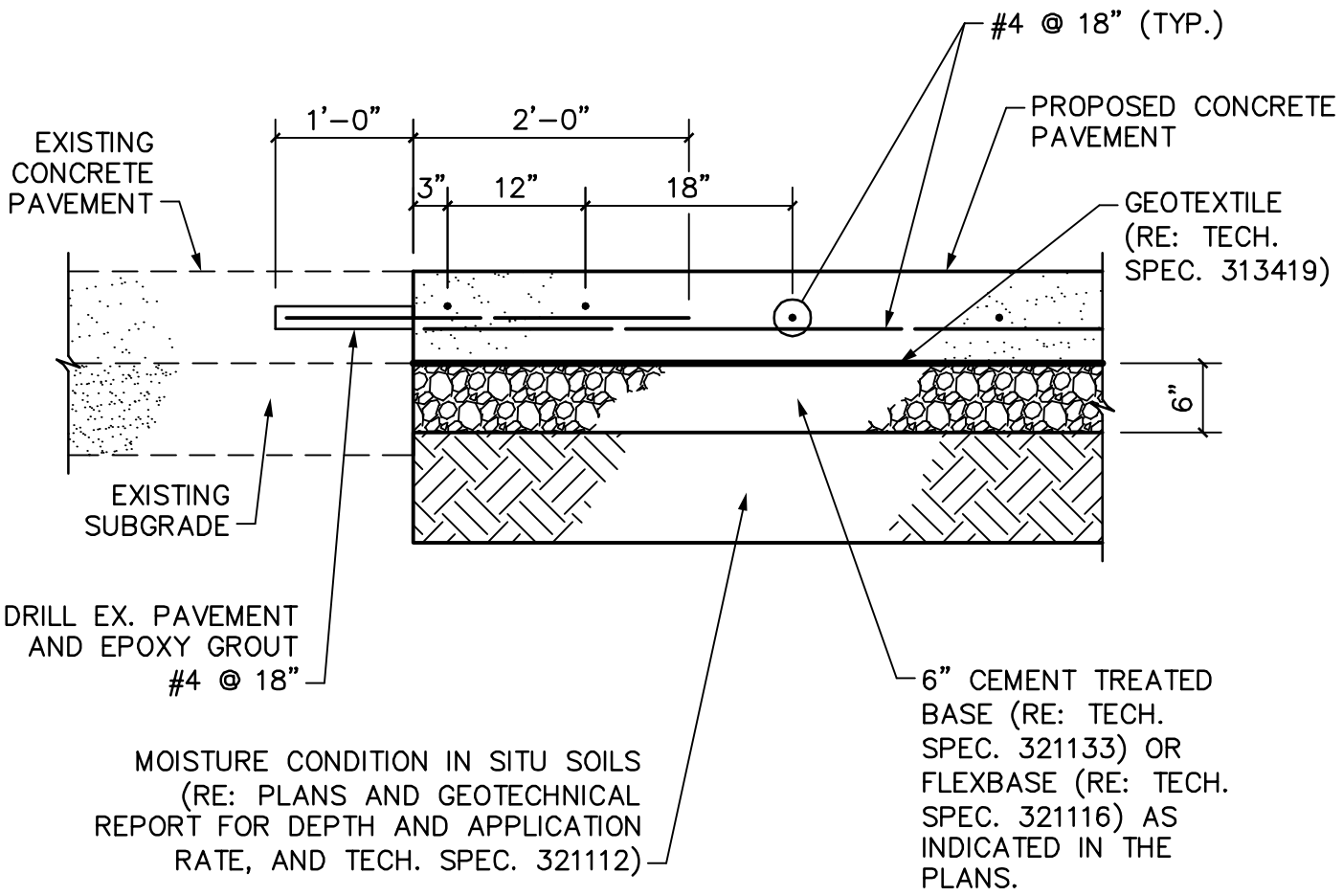

NOTE:

1. REFER TO TECHNICAL SPECIFICATION 321313 FOR CONCRETE PAVEMENT.

FRISCO PROGRESS IN MOTION.	STANDARD CONSTRUCTION DETAIL **EXISTING CONCRETE PAVEMENT WIDENING**	SCALE: 3/4"=1'-0" REVISED: MAR 2012 P04

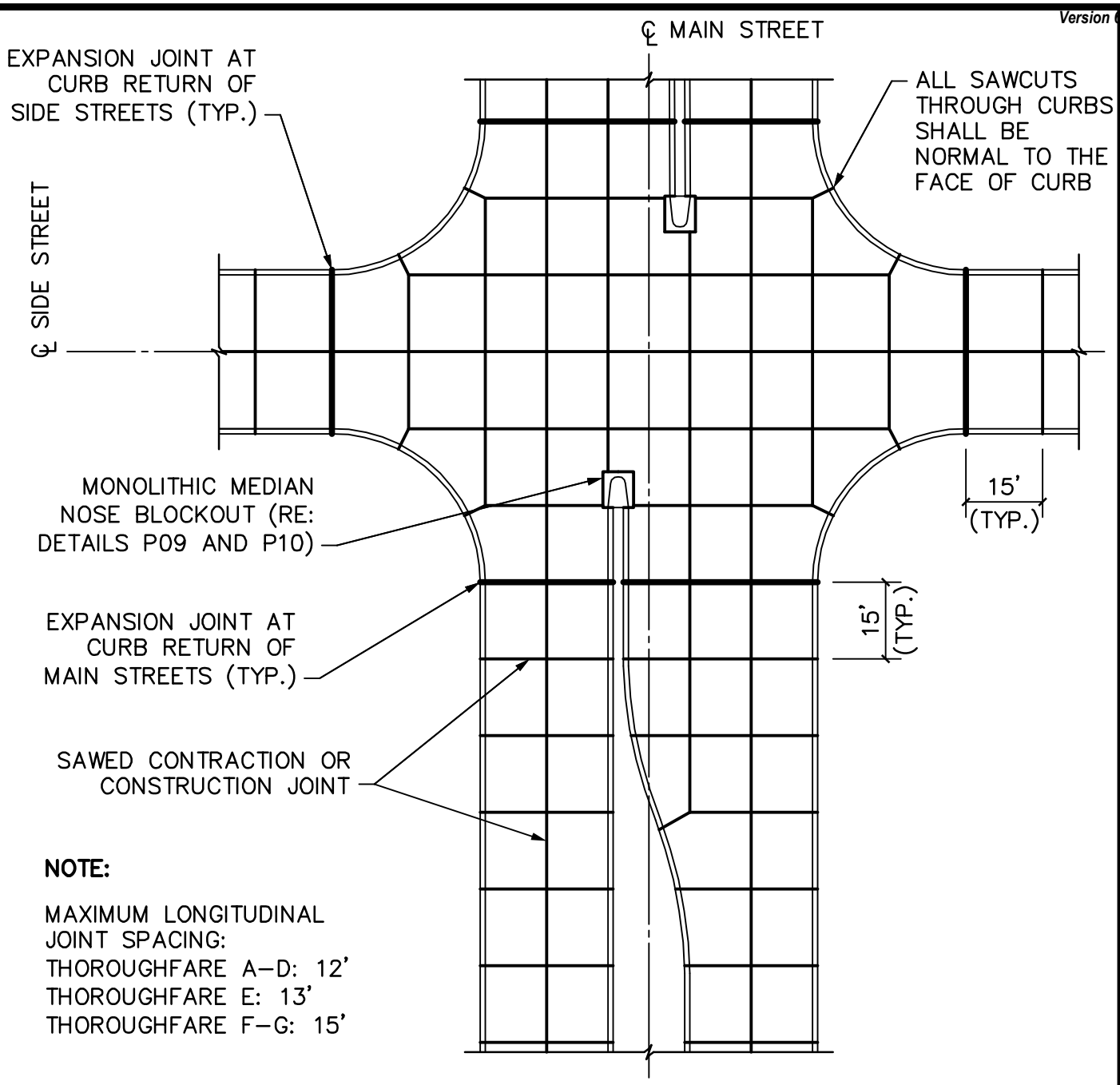

NOTE:

MAXIMUM LONGITUDINAL JOINT SPACING:
THOROUGHFARE A–D: 12'
THOROUGHFARE E: 13'
THOROUGHFARE F–G: 15'

NOTES:

1. REFER TO TECHNICAL SPECIFICATION 321313 FOR CONCRETE PAVEMENT.
2. ALL PAVEMENT JOINTS ARE EITHER SAWED CONTRACTION OR CONSTRUCTION JOINTS UNLESS NOTED OTHERWISE.
3. MAXIMUM TRANSVERSE JOINT SPACING IS 15'.
4. LONGITUDINAL JOINT SPACING SHALL MATCH LANE LINES UNLESS NOTED OTHERWISE.
5. ALL SAWCUTS SHALL BE 1/8" TO 3/16" WIDE AND ONE–FOURTH THE DEPTH OF THE ACTUAL SLAB THICKNESS.
6. ALL PAVEMENT JOINTS SHALL BE SEALED. JOINT SEALANT SHALL BE PROVIDED IN ACCORDANCE TECHNICAL SPECIFICATION 321373.

FRISCO PROGRESS IN MOTION.	STANDARD CONSTRUCTION DETAIL **CONCRETE PAVEMENT** **JOINTING LAYOUT**	SCALE: 1"=30' REVISED: MAR 2012 P05

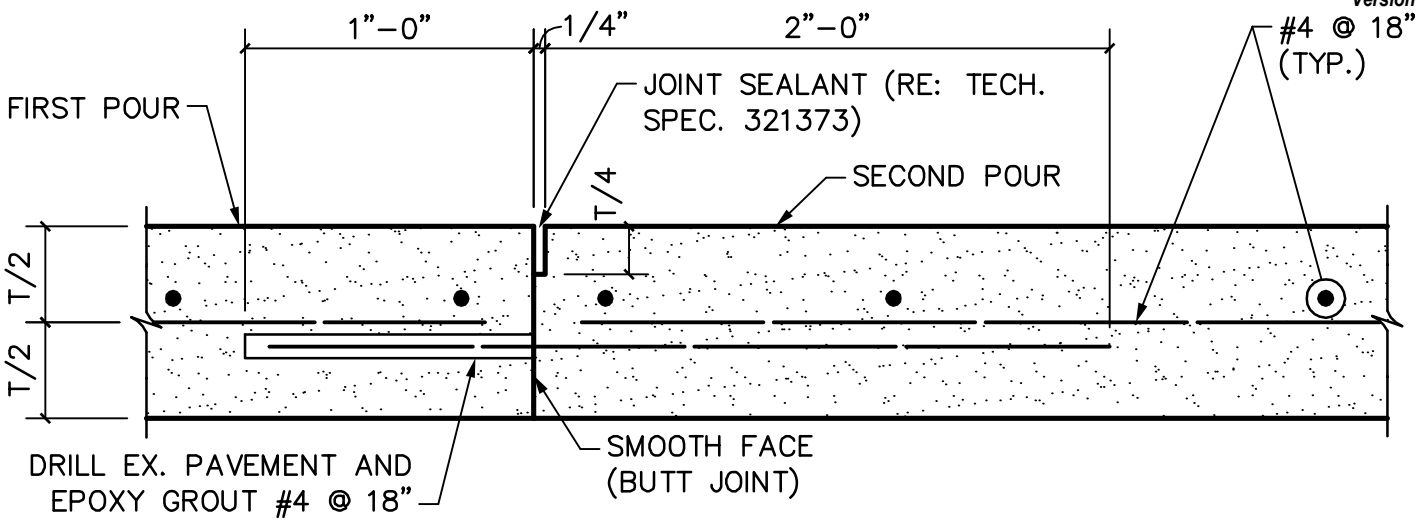

OPTION 1

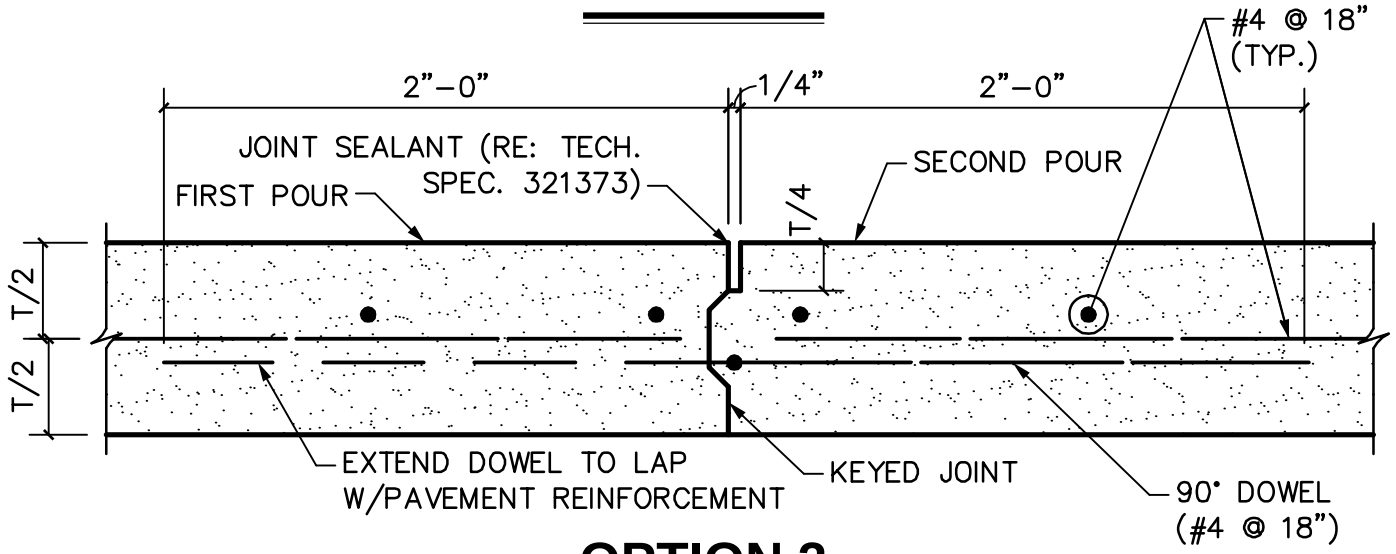

OPTION 2

NOTES:

1. REFER TO TECHNICAL SPECIFICATION 321313 FOR CONCRETE PAVEMENT
2. DOWELS MUST BE INSTALLED IN THE PAVEMENT PARALLEL TO THE PAVEMENT SURFACE.
3. DOWELS IN TRANSVERSE JOINTS MUST BE INSTALLED IN THE PAVEMENT PARALLEL TO THE PAVEMENT CENTERLINE.
4. DOWELS IN LONGITUDINAL JOINTS MUST BE INSTALLED IN THE PAVEMENT NORMAL TO THE PAVEMENT CENTERLINE.
5. BACKER ROD MATERIAL MAY BE USED IN CONJUNCTION WITH SEALANT IF THE JOINT SEALANT RESERVOIR MAINTAINS AT LEAST A 1:1 WIDTH/DEPTH RATIO, BUT IN NO CASE SHALL THE RATIO BE GREATER THAN 1:15. THE BACKER ROD DIAMETER SHALL BE 1/8" GREATER THAN THE JOINT WIDTH.

FRISCO PROGRESS IN MOTION.	STANDARD CONSTRUCTION DETAIL **CONCRETE PAVEMENT** **CONSTRUCTION JOINTS**	SCALE: 1 1/2"=1'–0" REVISED: MAR 2012 P06

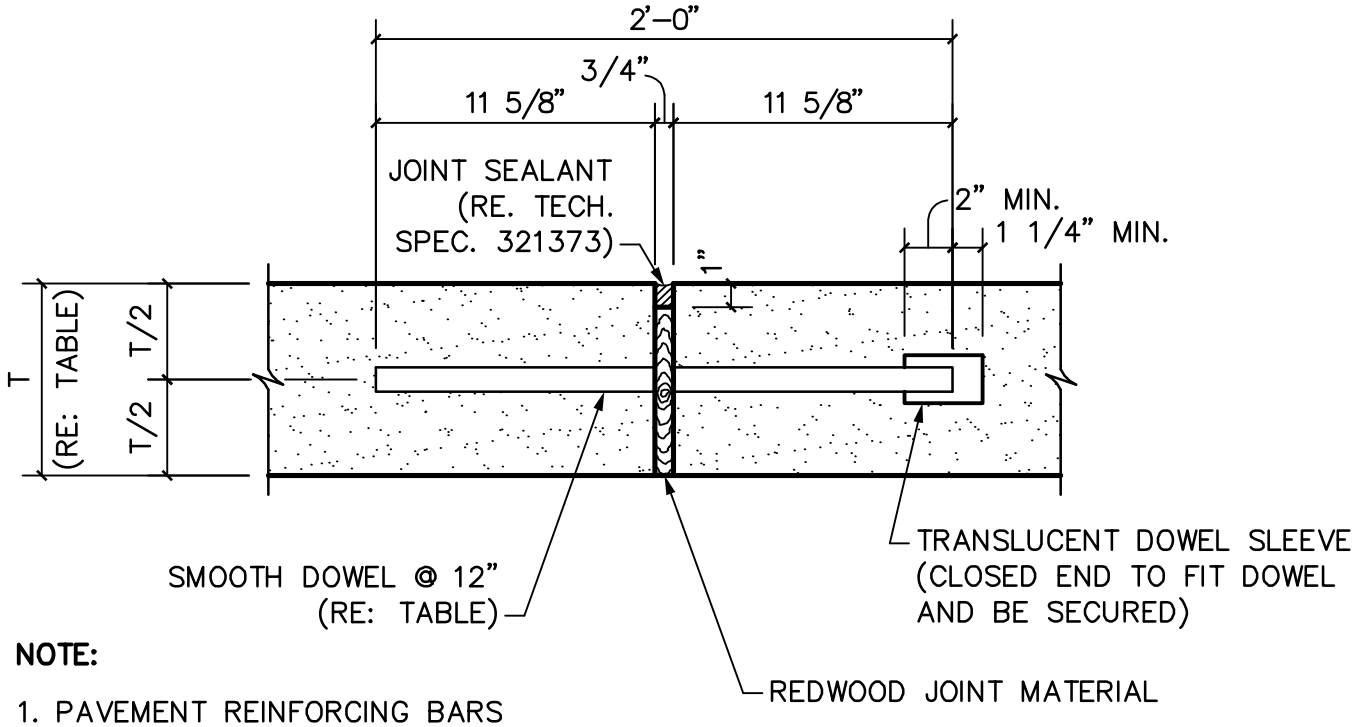

NOTE:

1. PAVEMENT REINFORCING BARS NOT SHOWN FOR CLARITY.

TABLE			
STREET CLASS	T (IN.)	DOWEL SIZE (IN.)	DOWEL LENGTH (L) (IN.)
A	9	1.0	24
B	8	1.0	24
C	7	0.75	24
D	6	0.75	24
E	6	0.75	24
F	6	0.75	24
G	6	0.75	24

NOTES:

1. REFER TO TECHNICAL SPECIFICATION 321313 FOR CONCRETE PAVEMENT.
2. CAPPED AND UNCAPPED ENDS SHALL ALTERNATE.
3. DOWEL SUPPORT MATERIALS AND LAYOUT SHALL BE SUBMITTED TO THE CITY FOR REVIEW AND APPROVAL PRIOR TO ORDERING MATERIALS AND CONSTRUCTION.
4. ENTIRE LENGTH OF DOWEL SHALL BE LUBRICATED.
5. DOWELS MUST BE INSTALLED IN THE PAVEMENT PARALLEL TO THE PAVEMENT SURFACE AND TO THE CENTERLINE.

FRISCO
PROGRESS IN MOTION.

STANDARD CONSTRUCTION DETAIL
CONCRETE PAVEMENT
EXPANSION JOINT

SCALE: 1 1/2"=1'–0"
REVISED: MAR 2012
P07

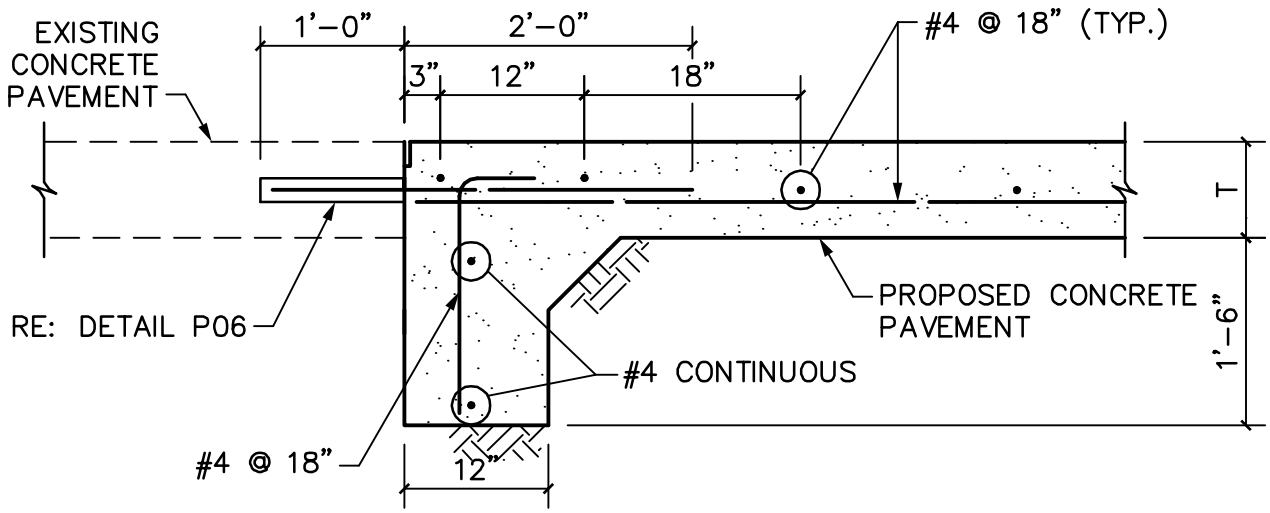

STREET HEADER AT EXISTING PAVEMENT

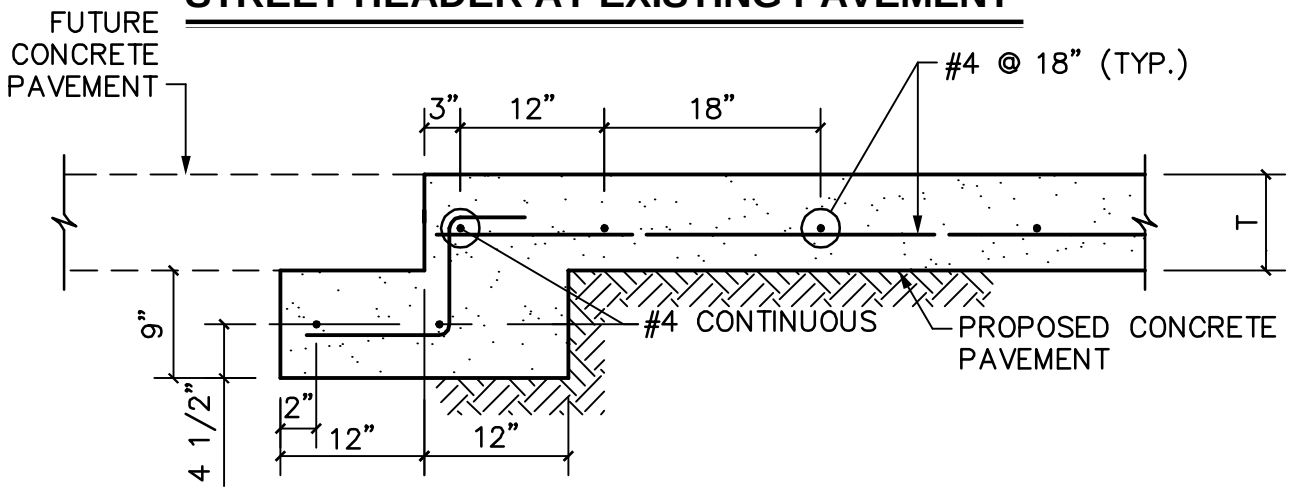

STREET HEADER FOR FUTURE CONCRETE PAVEMENT

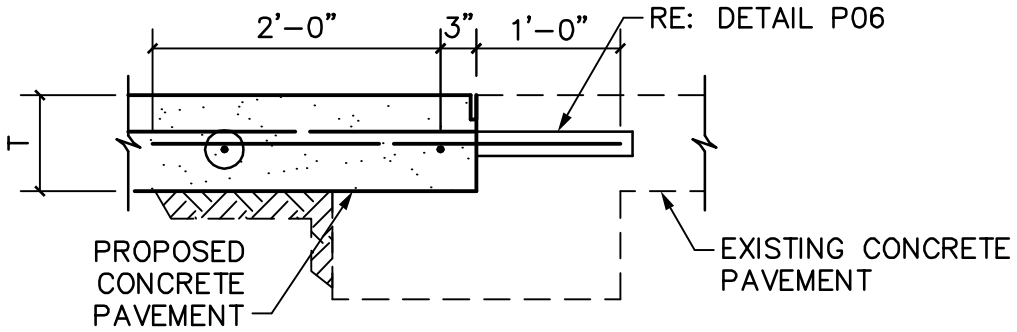

CONCRETE PAVEMENT AT STREET HEADER

NOTES:

1. REFER TO TECHNICAL SPECIFICATION 321313 FOR CONCRETE PAVEMENT.
2. REFERENCE TYPICAL SECTIONS FOR PROPOSED CONCRETE PAVEMENT THICKNESS AND SUBGRADE TREATMENT.

FRISCO PROGRESS IN MOTION.	STANDARD CONSTRUCTION DETAIL **CONCRETE STREET HEADERS**	SCALE: 3/4"=1'-0" REVISED: MAR 2012 P08

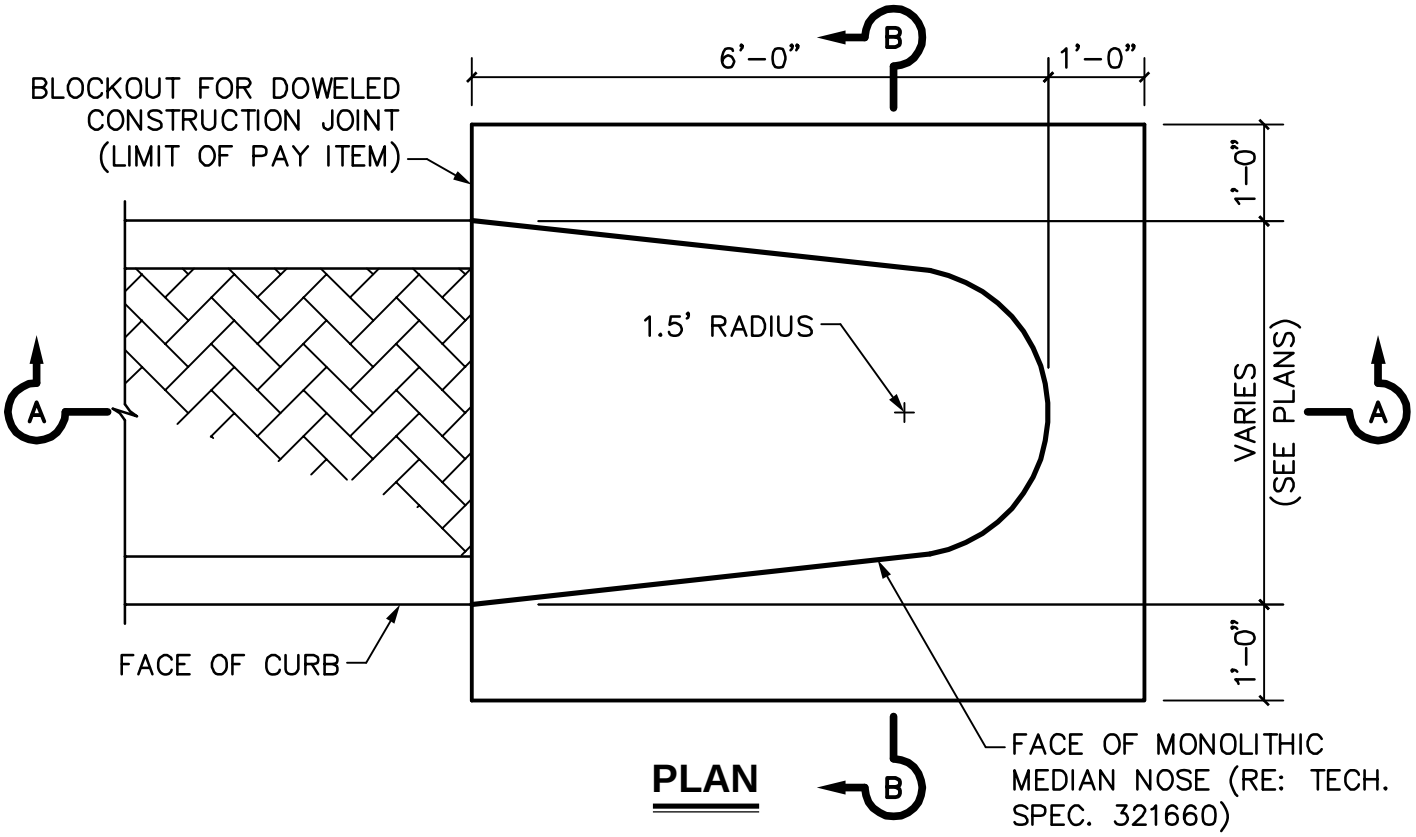

PLAN

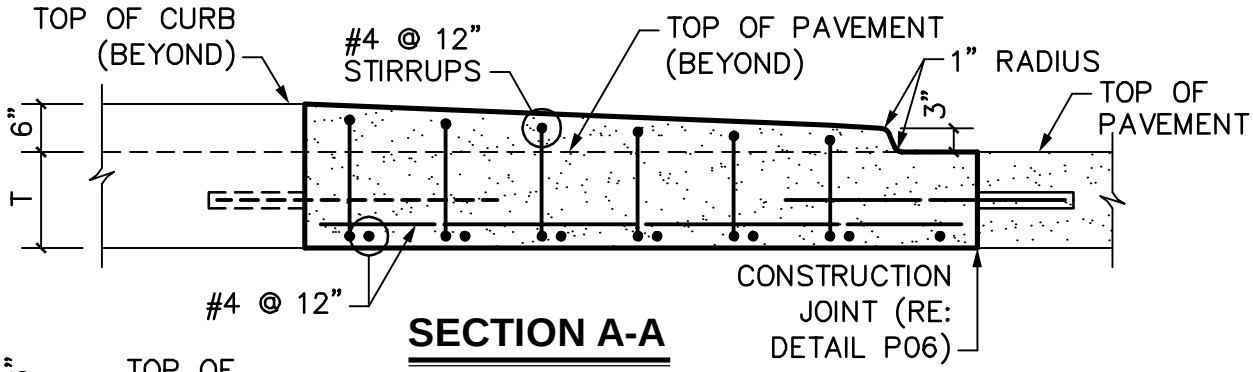

SECTION A-A

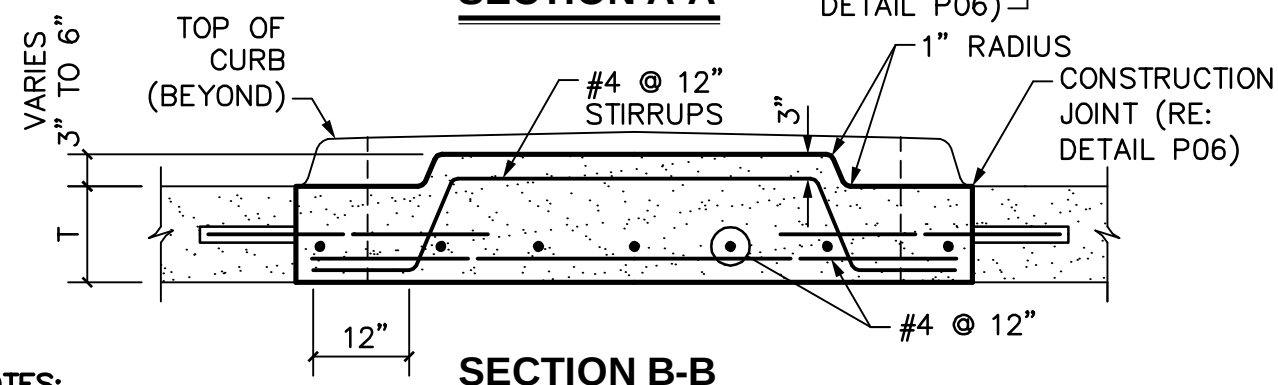

SECTION B-B

NOTES:

1. REFER TO TECHNICAL SPECIFICATION 321313 FOR CONCRETE PAVEMENT.
2. PROVIDE TYPE 1 MONOLITHIC MEDIAN NOSE AT ALL MEDIANS 8' WIDE OR LESS.

FRISCO PROGRESS IN MOTION.	STANDARD CONSTRUCTION DETAIL **MONOLITHIC MEDIAN NOSE** **TYPE 1**	SCALE: 1/2"=1'–0" REVISED: MAR 2012 P09

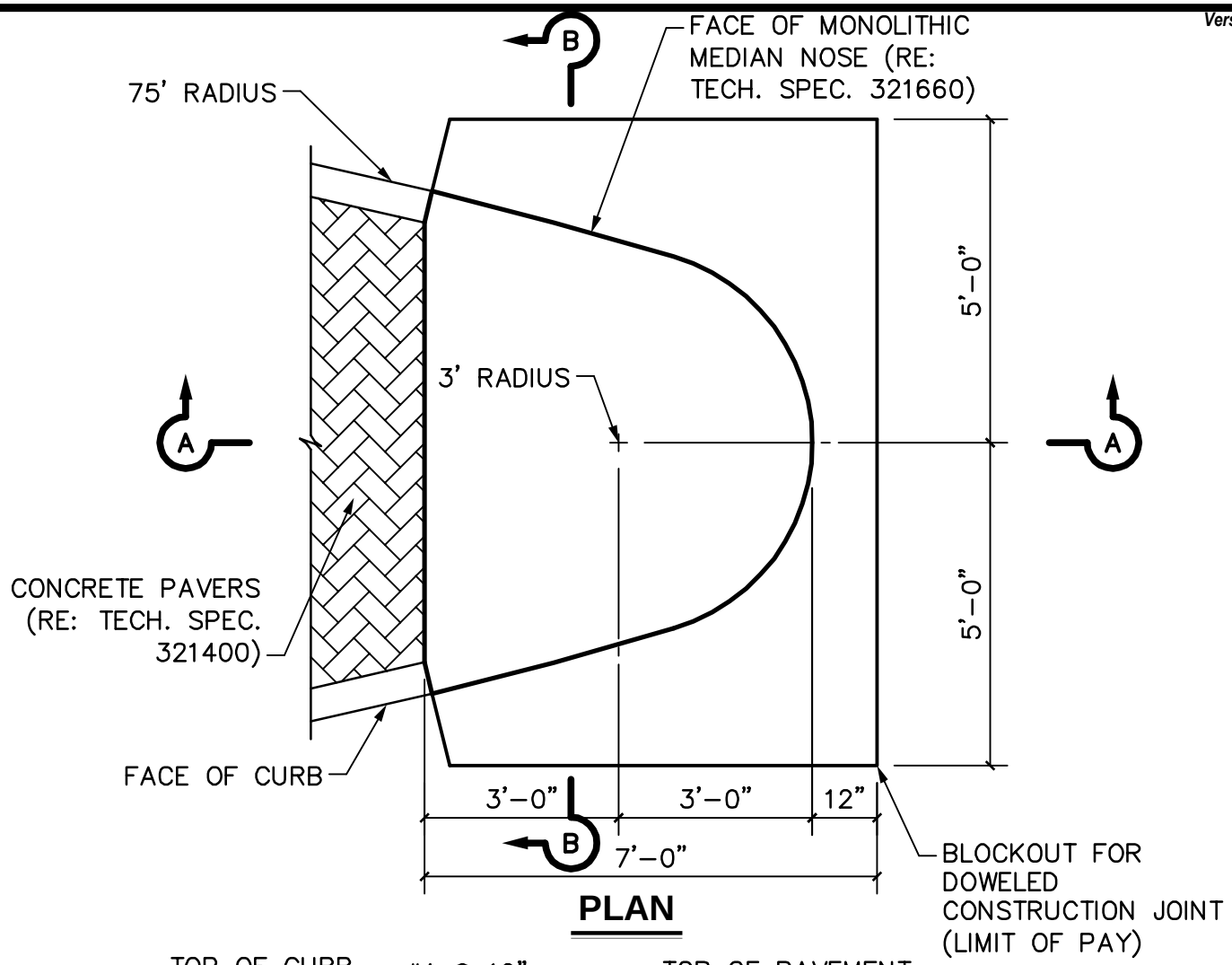

PLAN

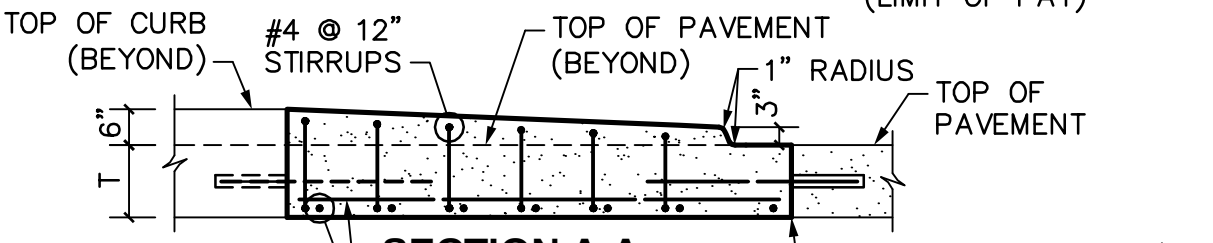

SECTION A-A

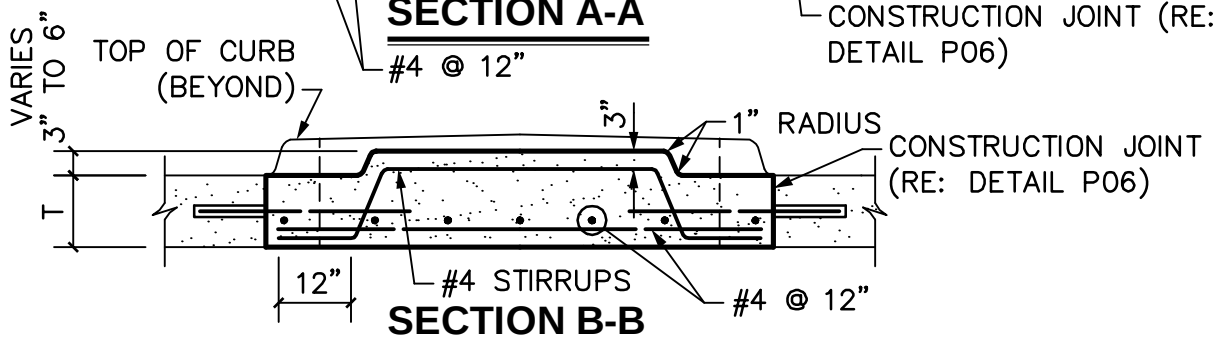

SECTION B-B

NOTES:

1. REFER TO TECHNICAL SPECIFICATION 321313 FOR CONCRETE PAVEMENT.
2. PROVIDE TYPE 2 MONOLITHIC MEDIAN NOSE AT ALL MEDIANS GREATER THAN 8' WIDE.

FRISCO PROGRESS IN MOTION.	STANDARD CONSTRUCTION DETAIL **MONOLITHIC MEDIAN NOSE** **TYPE 2**	SCALE: 3/8"=1'-0" REVISED: MAR 2012 P10

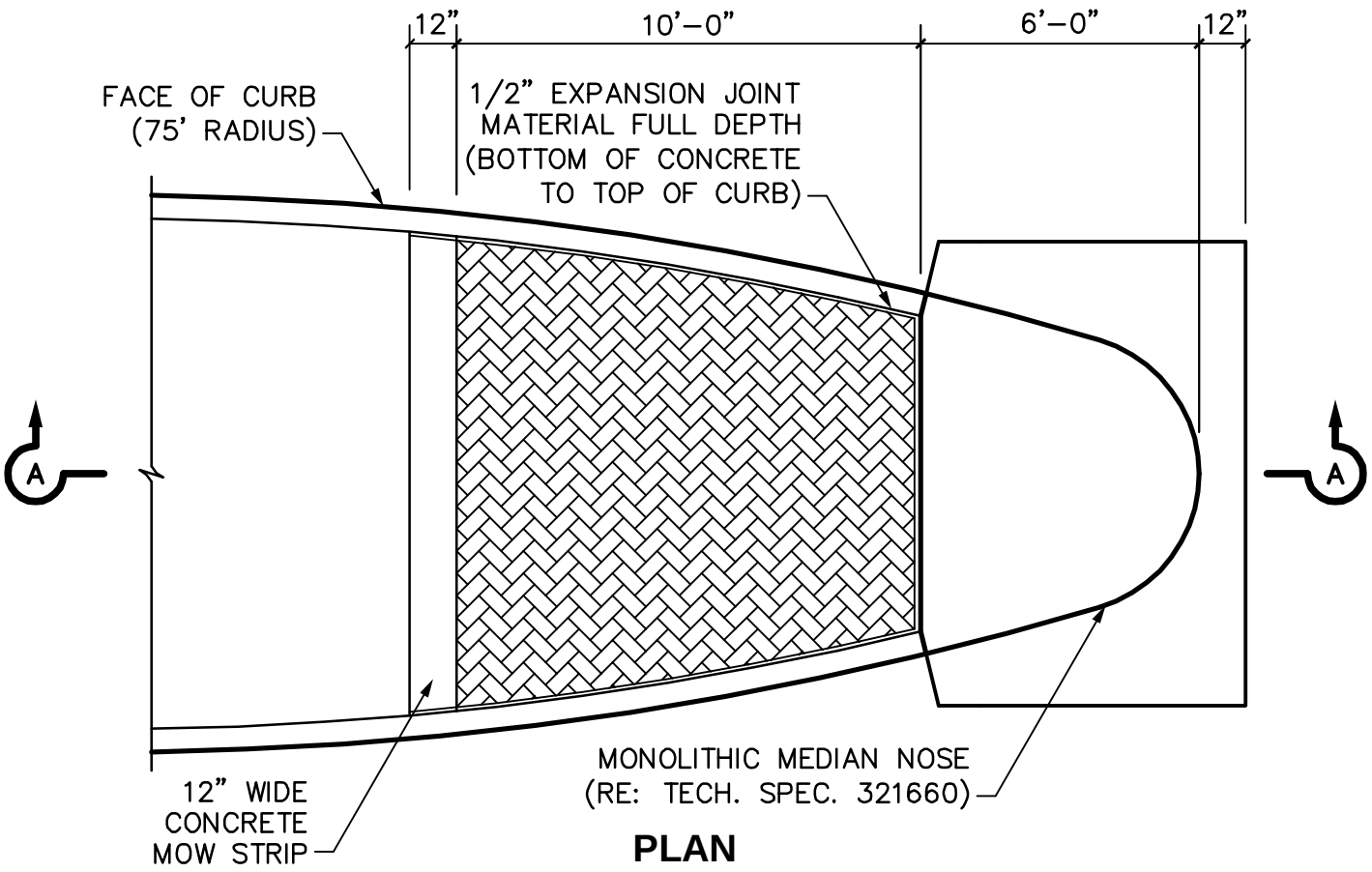

PLAN

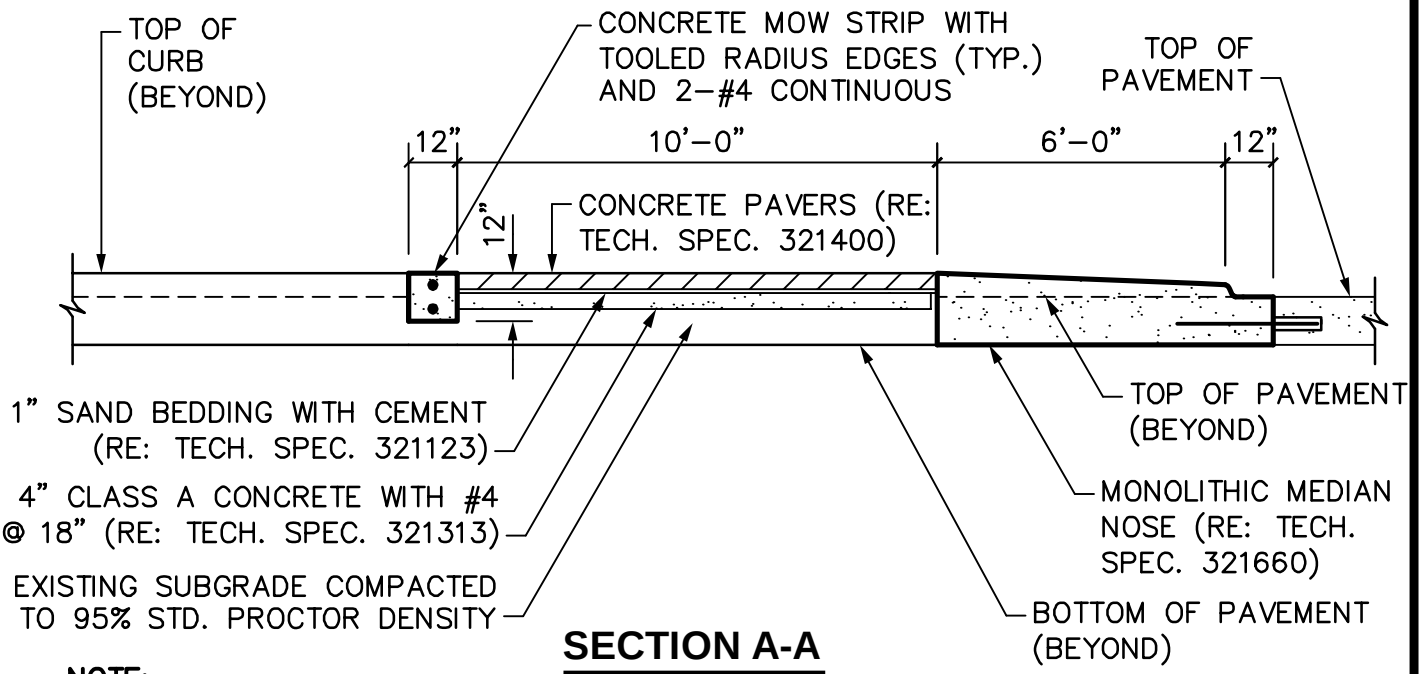

SECTION A-A

NOTE:

1. REFER TO TECHNICAL SPECIFICATION 321313 FOR CONCRETE PAVEMENT.

FRISCO PROGRESS IN MOTION.	STANDARD CONSTRUCTION DETAIL **MEDIAN NOSE WITH PAVERS**	SCALE: 1/4"=1'–0" REVISED: MAR 2012 P11

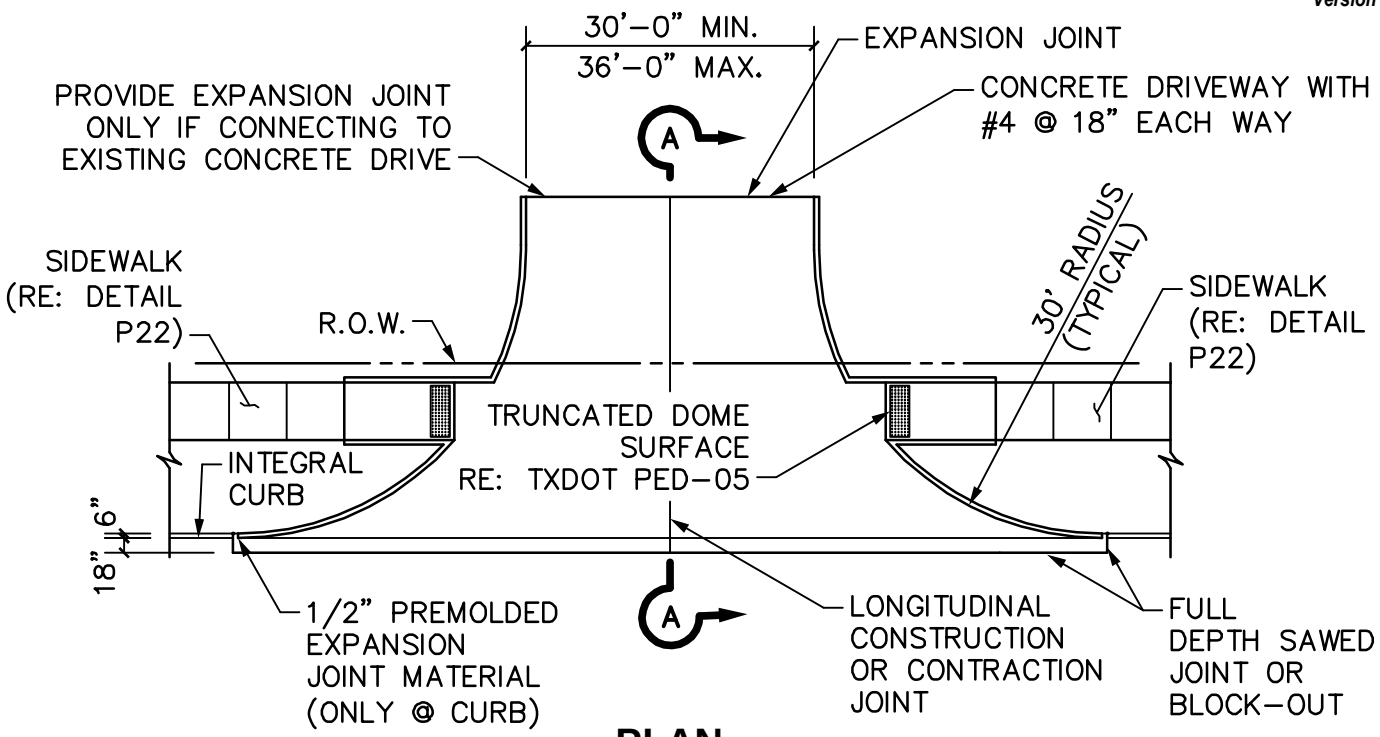

PLAN

SCALE: 1"=20'

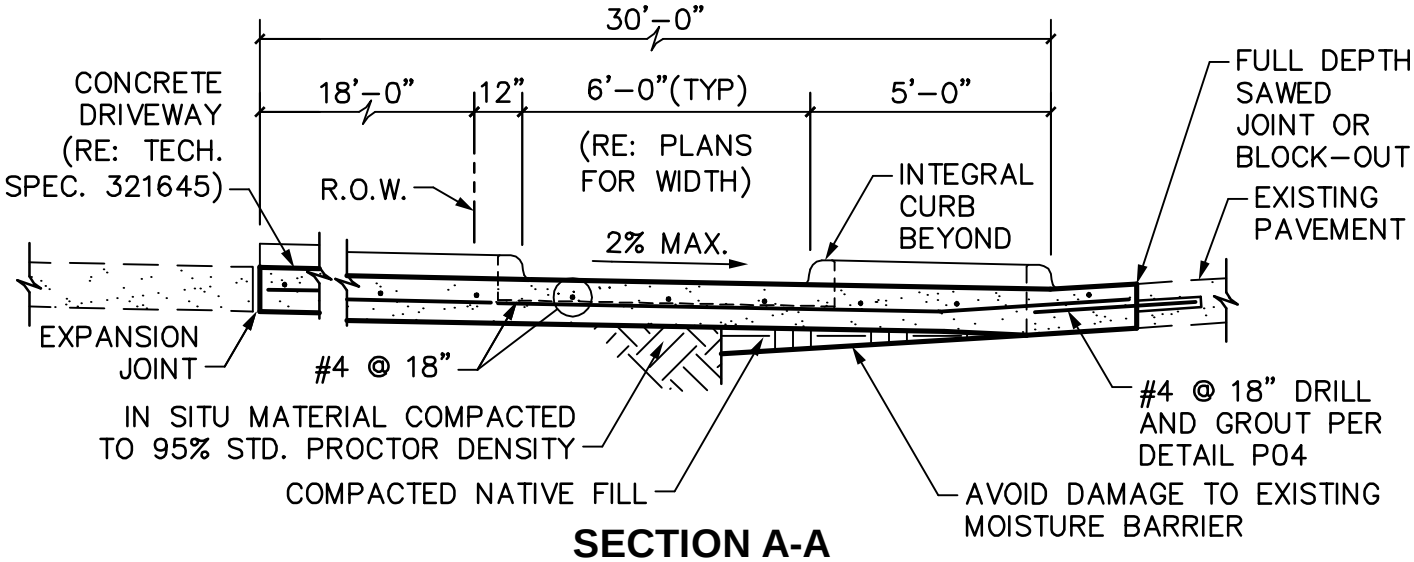

SECTION A-A

SCALE: 1/4"=1'–0"

NOTES:

1. REFER TO TECHNICAL SPECIFICATION 321313 FOR CONCRETE PAVEMENT
2. EXISTING CURB AND GUTTER SHALL BE VERTICALLY SAWCUT. HORIZONTAL SAWCUTTING OF CURB NOT ALLOWED.
3. SIDEWALK SECTION THROUGH DRIVEWAY SHALL BE POURED SAME THICKNESS AS DRIVEWAY APPROACH (EXISTING SIDEWALK, IF ANY, SHALL BE REMOVED).
4. DRIVEWAY THICKNESS TO MATCH STREET PAVEMENT THICKNESS (6" MINIMUM).

FRISCO PROGRESS IN MOTION.	STANDARD CONSTRUCTION DETAIL **COMMERCIAL DRIVEWAY APPROACH**	SCALE: AS MARKED REVISED: MAR 2012 P12

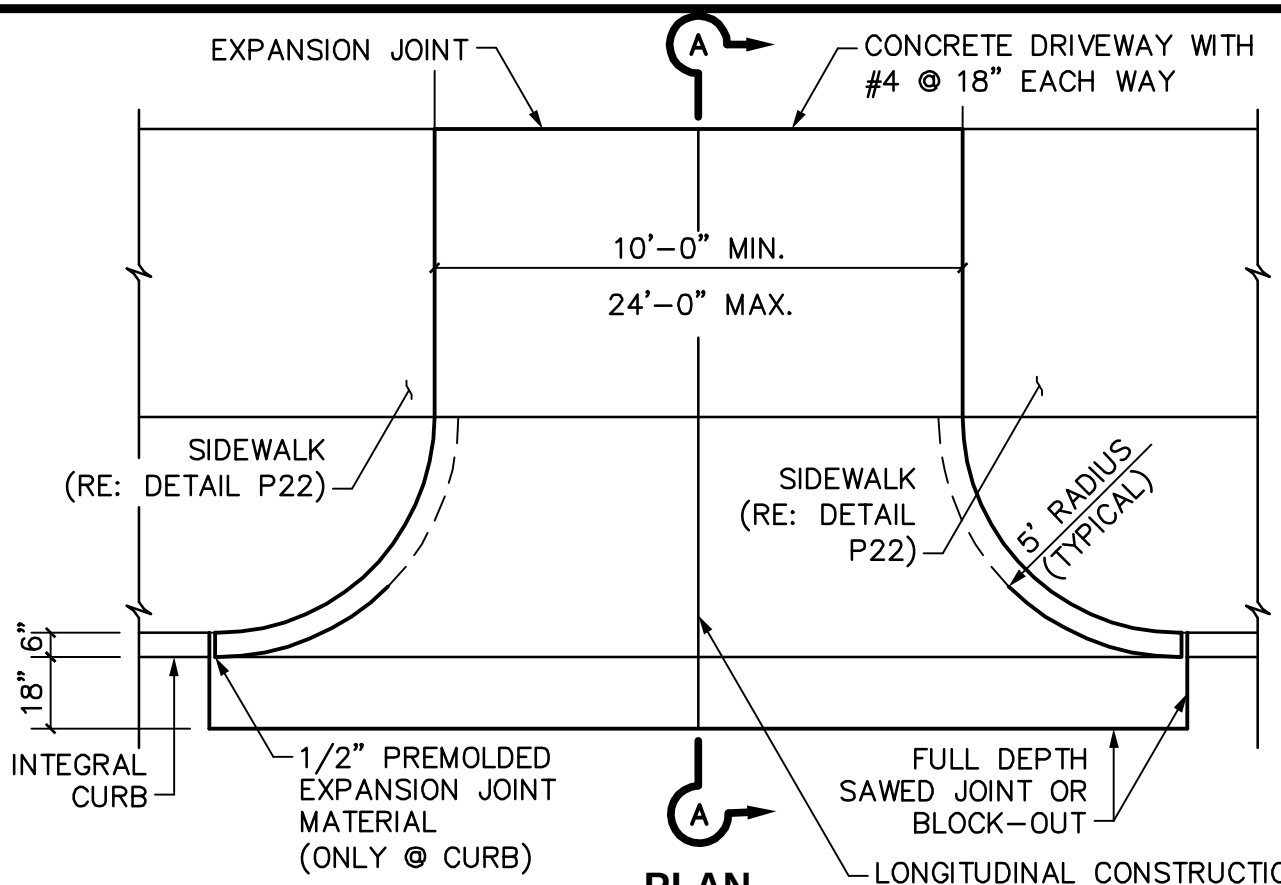

PLAN

SCALE: 1/4"=1'-0"

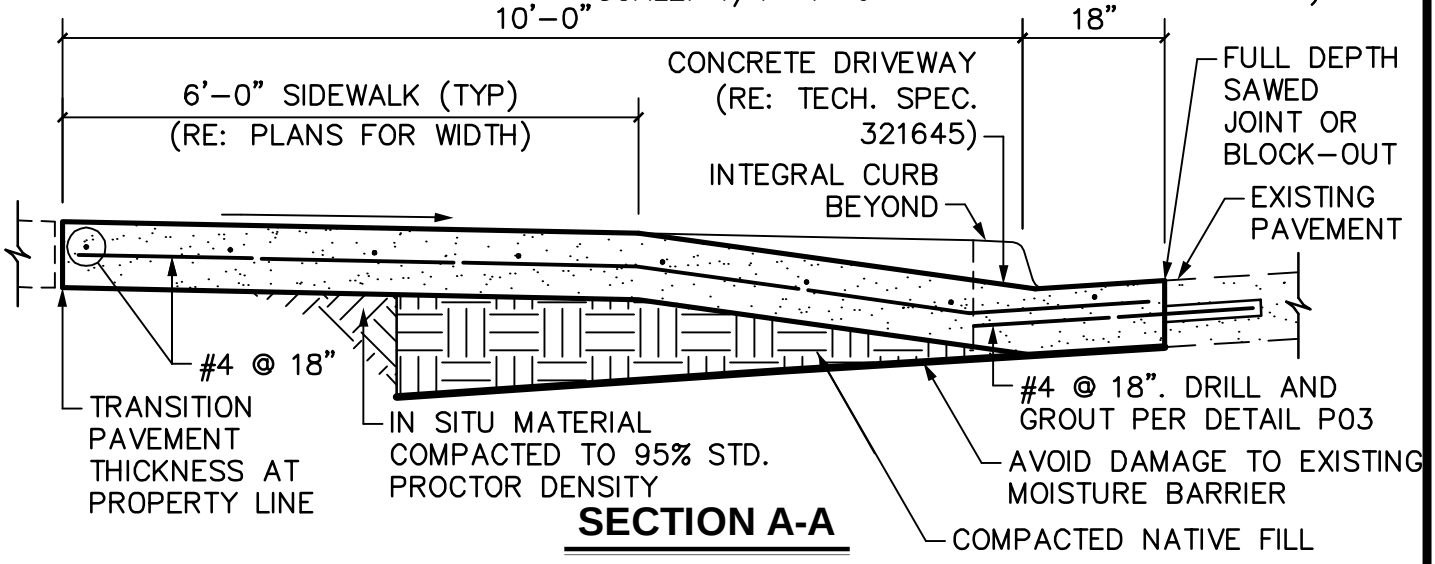

SECTION A-A

SCALE: 1/2"=1'-0"

NOTES:

1. REFER TO TECHNICAL SPECIFICATION 321313 FOR CONCRETE PAVEMENT.
2. SIDEWALK SECTION THROUGH DRIVEWAY SHALL BE POURED SAME THICKNESS AS DRIVEWAY APPROACH (EXISTING SIDEWALK, IF ANY, SHALL BE REMOVED).
3. DRIVEWAY THICKNESS TO MATCH STREET PAVEMENT THICKNESS (6" MINIMUM).
4. DRIVEWAYS CONSTRUCTED ON PRIVATE PROPERTY SHALL TAPER AT 1:1 RATIO TO INTERSECT AT PROPERTY LINE NO GREATER THAN 24' WIDTH.

FRISCO PROGRESS IN MOTION.	STANDARD CONSTRUCTION DETAIL **RESIDENTIAL DRIVEWAY APPROACH WITH VERTICAL SAWCUT**	SCALE: AS MARKED REVISED: MAR 2012 P13

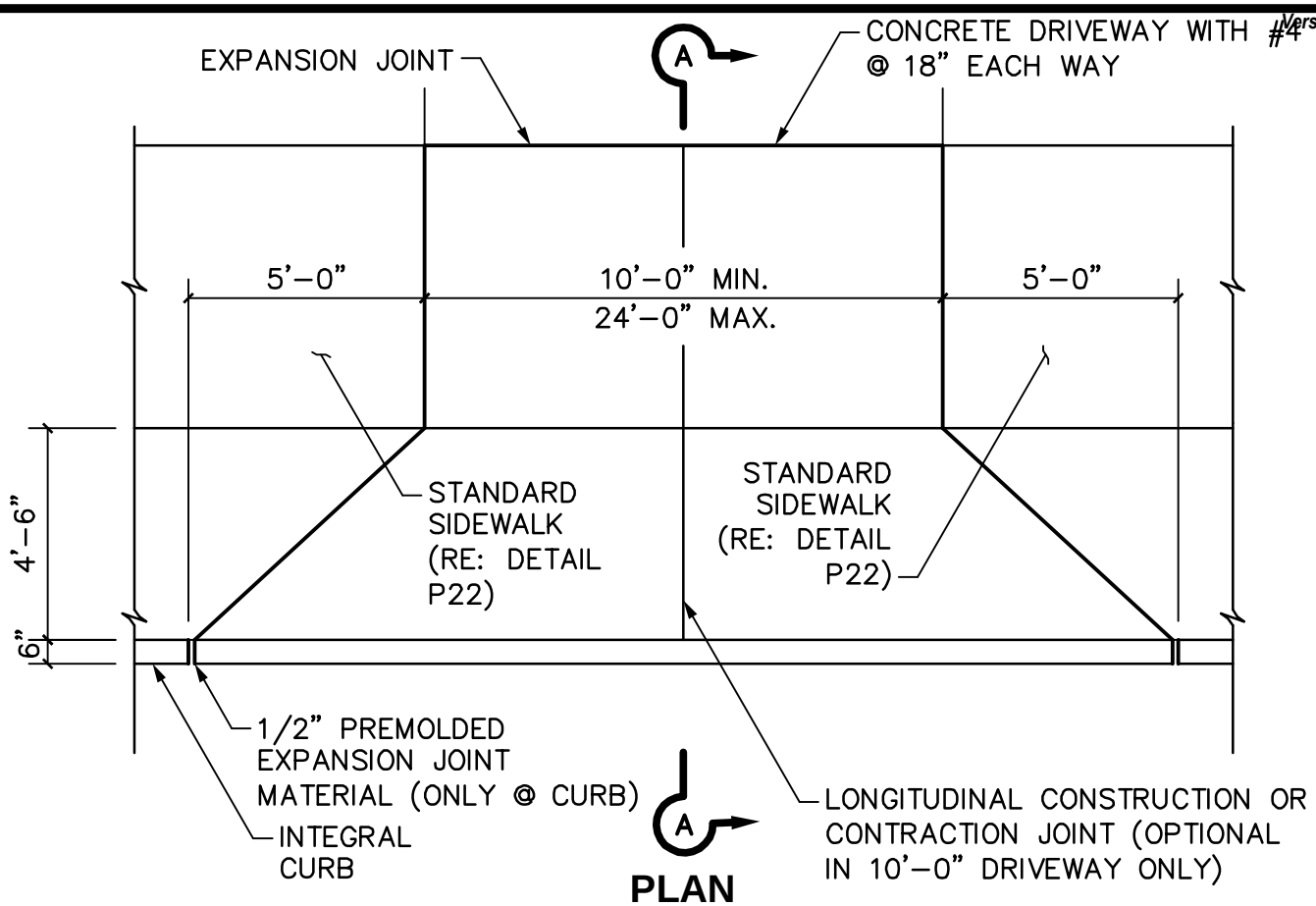

PLAN

SCALE: 1/4"=1'-0"

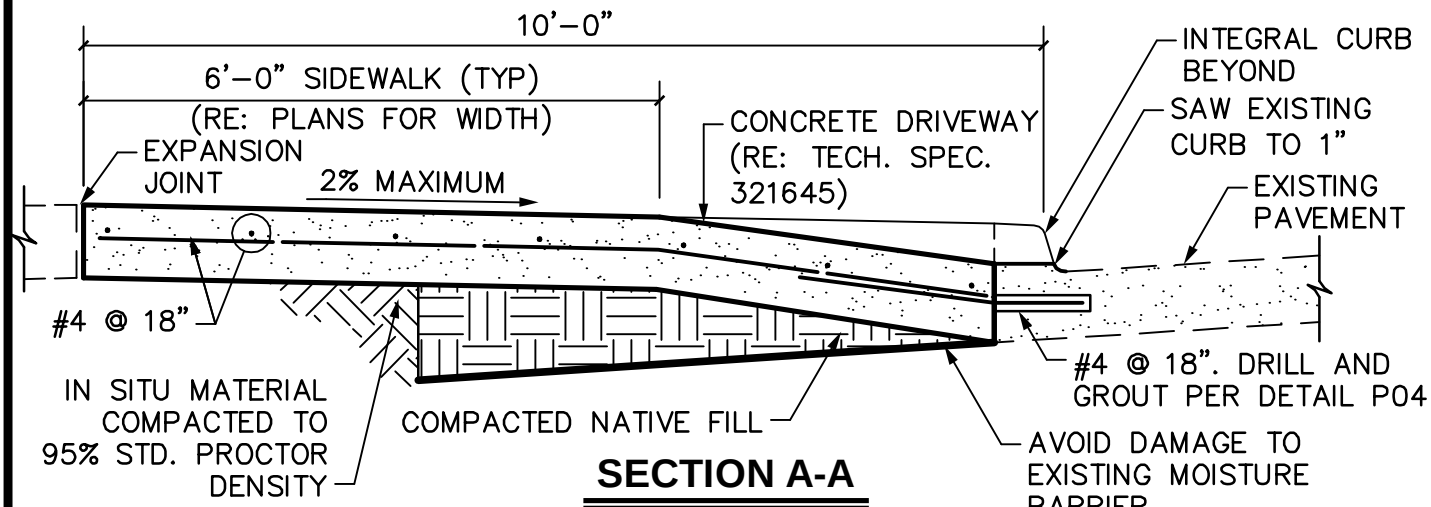

SECTION A-A

SCALE: 1/2"=1'-0"

NOTES:

1. REFER TO TECHNICAL SPECIFICATION 321313 FOR CONCRETE PAVEMENT.
2. SIDEWALK SECTION THROUGH DRIVEWAY SHALL BE POURED SAME THICKNESS AS DRIVEWAY APPROACH (EXISTING SIDEWALK, IF ANY, SHALL BE REMOVED).
3. DRIVEWAY THICKNESS TO MATCH STREET PAVEMENT THICKNESS (6" MINIMUM).
4. DRIVEWAYS CONSTRUCTED ON PRIVATE PROPERTY SHALL TAPER AT A 1:1 RATIO TO INTERSECT APPROACH AT PROPERTY LINE NO GREATER THAN 24' WIDTH.

FRISCO PROGRESS IN MOTION.	STANDARD CONSTRUCTION DETAIL **RESIDENTIAL DRIVEWAY APPROACH WITH HORIZONTAL SAWCUT**	SCALE: AS MARKED REVISED: MAR 2012 P14

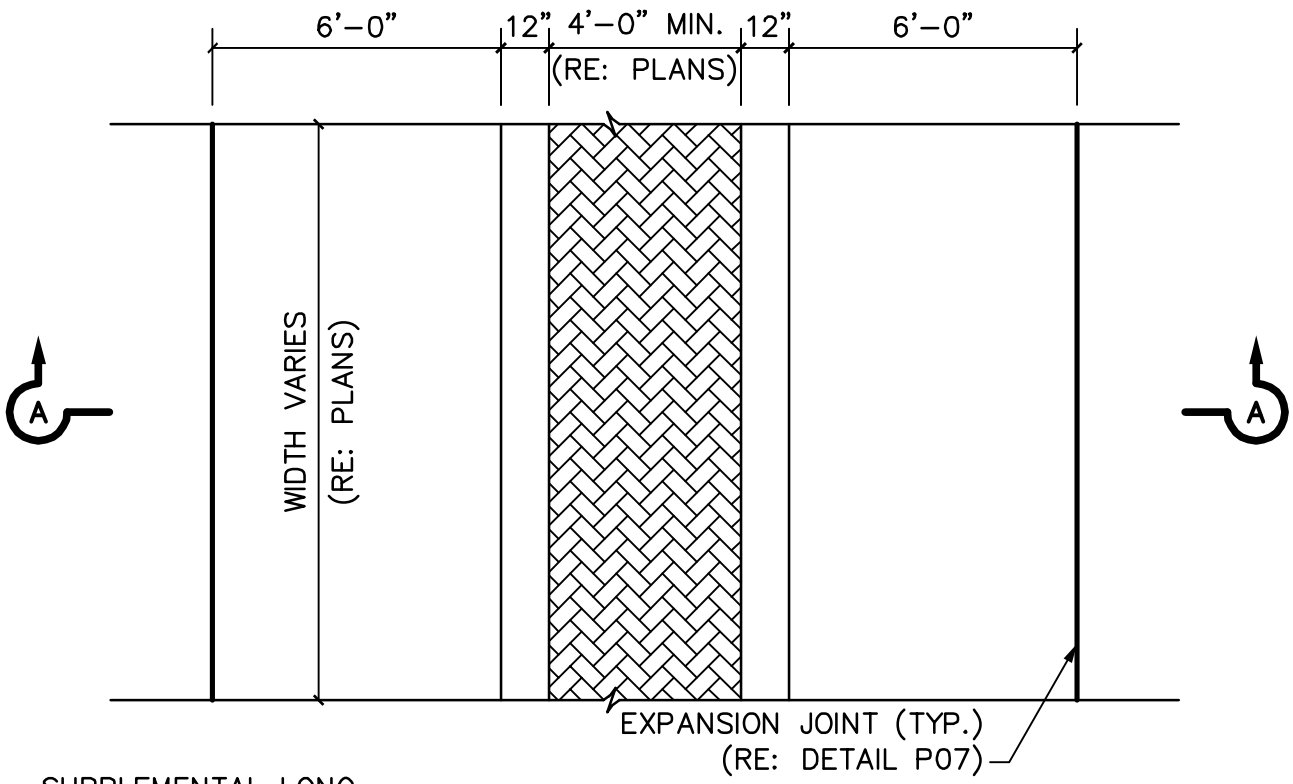

PLAN

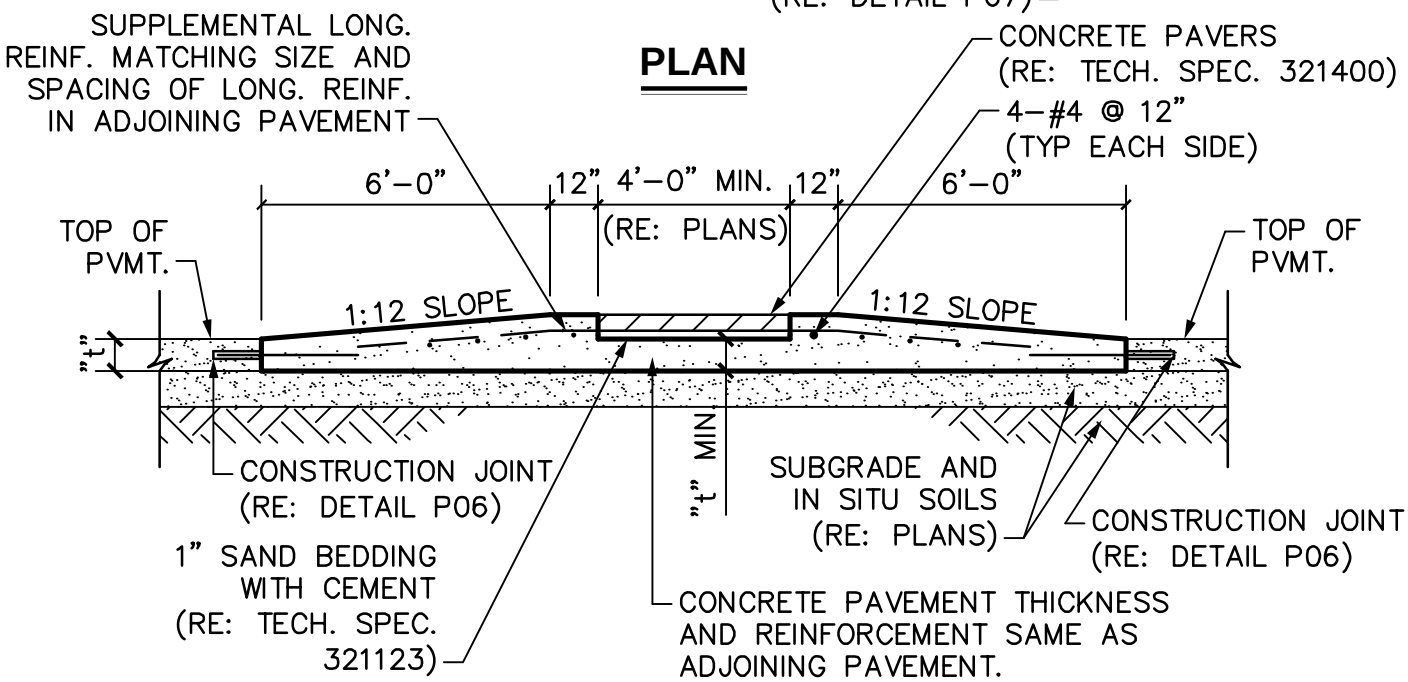

SECTION A-A

NOTE:

1. REFER TO TECHNICAL SPECIFICATION 321313 FOR CONCRETE PAVEMENT.
2. WIDTH OF PAVERS SHALL AT A MINIMUM MATCH THE WIDTH OF THE CONNECTING SIDEWALK.

FRISCO PROGRESS IN MOTION.	STANDARD CONSTRUCTION DETAIL **SPEED TABLE**	SCALE: 1/4"=1'-0" REVISED: MAR 2012 P21

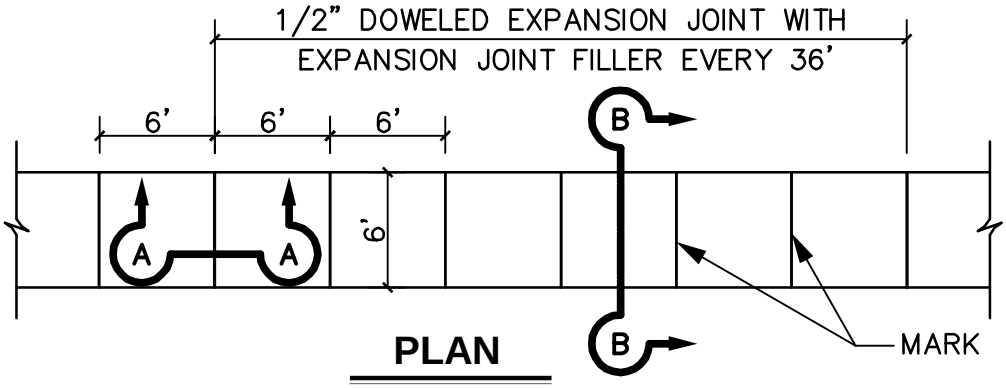

PLAN

SCALE: 1"=10'

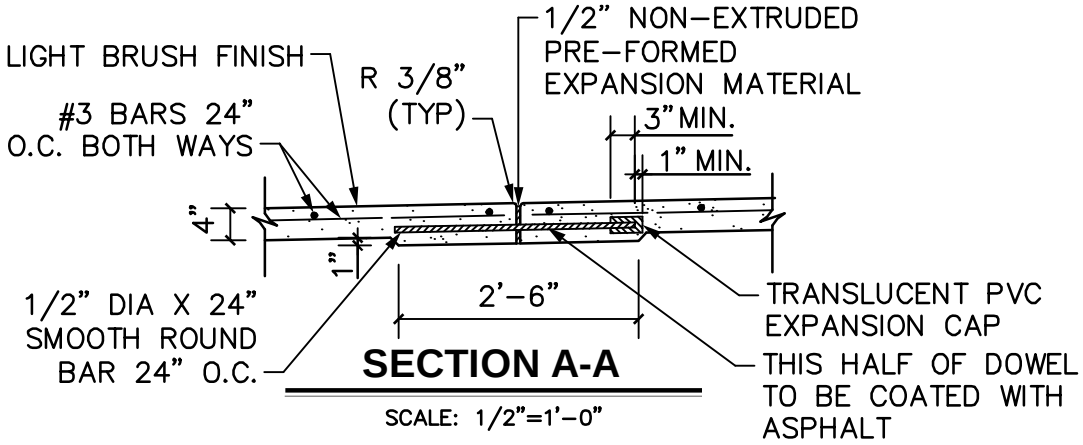

SECTION A-A

SCALE: 1/2"=1'-0"

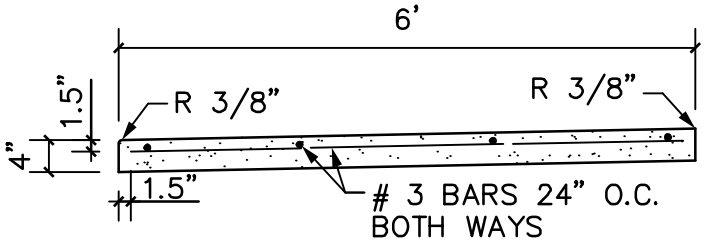

SECTION B-B

SCALE: 1/2"=1'-0"

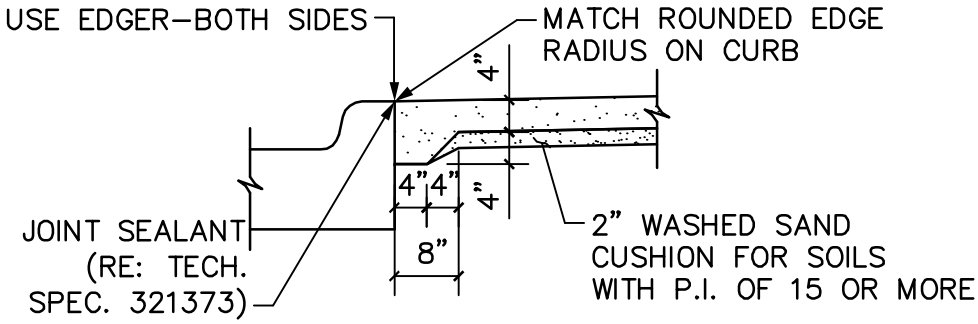

JOINT LUG DETAIL FOR SIDEWALK ADJACENT TO CURB

SCALE: 1/2"=1'-0"

NOTES:

1. MAXIMUM GRADE OF THE SIDEWALK SHALL BE FIVE PERCENT (5%) OR THE GRADE OF THE ADJACENT STREET.
2. CROSS SLOPE OF SIDEWALK SHALL BE TWO PERCENT (2%) MAX PER A.D.A.
3. OTHER THAN 6' SIDEWALK WIDTH MAY BE SPECIFIED BY OWNER. 6' SIDEWALK WIDTH FOR A & B THOROUGHFARES.
4. SIDEWALK SHALL BE CLASS A CONCRETE UNLESS OTHERWISE SPECIFIED BY OWNER.
5. ALL HONEYCOMB IN BACK OF CURB TO BE TROWEL-PLASTERED BEFORE POURING SIDEWALK.
6. LUG MAY BE FORMED BY SHAPING SUBGRADE TO APPROXIMATE DIMENSIONS SHOWN.

FRISCO
PROGRESS IN MOTION.

STANDARD CONSTRUCTION DETAIL

REINFORCED CONCRETE SIDEWALK

SCALE: AS MARKED

REVISED: MAR 2012

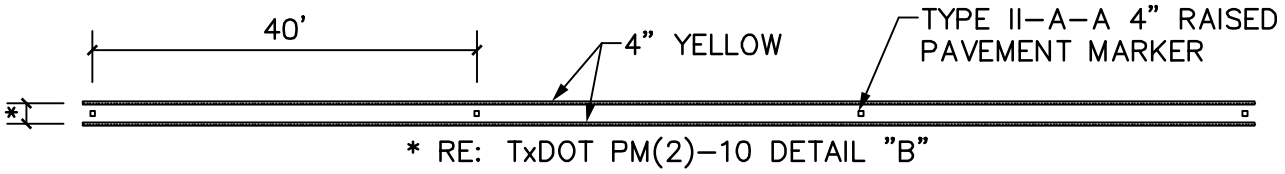

DOUBLE YELLOW LINE (PAVEMENT MARKINGS)

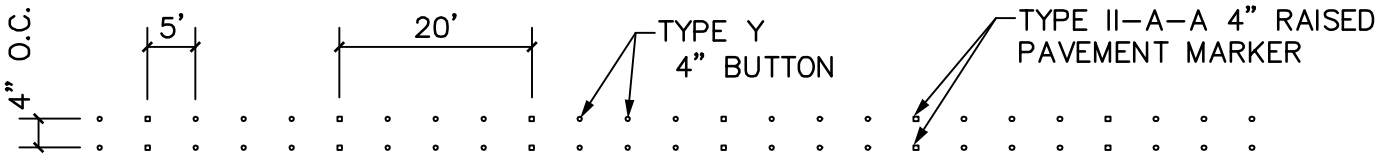

DOUBLE YELLOW LINE (BUTTONS, RAISED PAVEMENT MARKERS)

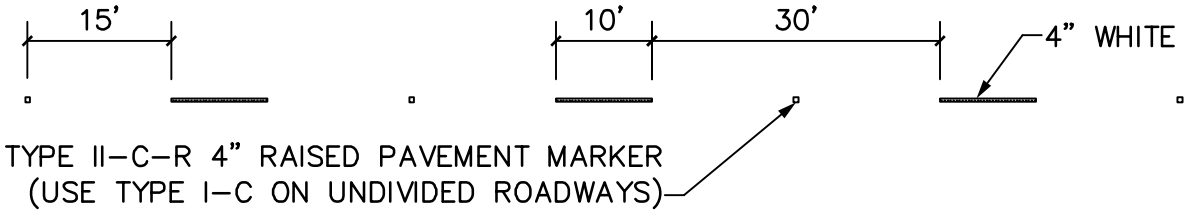

BROKEN WHITE LANE LINE

WHITE OR YELLOW EDGE LINE

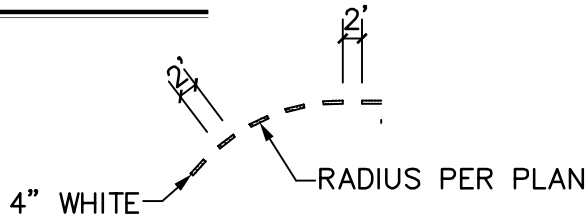

LEFT TURN "PUPPY TRACKS"

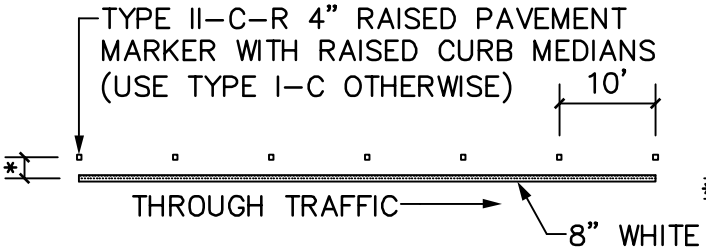

LEFT TURN BAY LINE

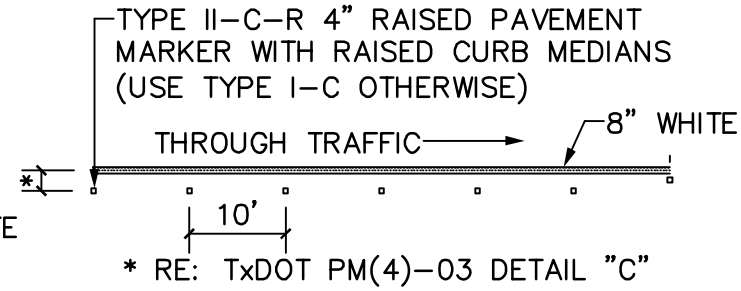

RIGHT TURN BAY LINE

NOTES:

1. ALL STRIPING, ARROWS AND WORDS ON PAVEMENT SHALL BE THERMOPLASTIC UNLESS OTHERWISE NOTED IN PLANS.
2. REFER TO TECHNICAL SPECIFICATION 321723.

FRISCO PROGRESS IN MOTION.	STANDARD CONSTRUCTION DETAIL **PAVEMENT MARKINGS AND MARKERS** **SHEET 1 OF 2**	SCALE: 1"=20' REVISED: MAR 2012 T01

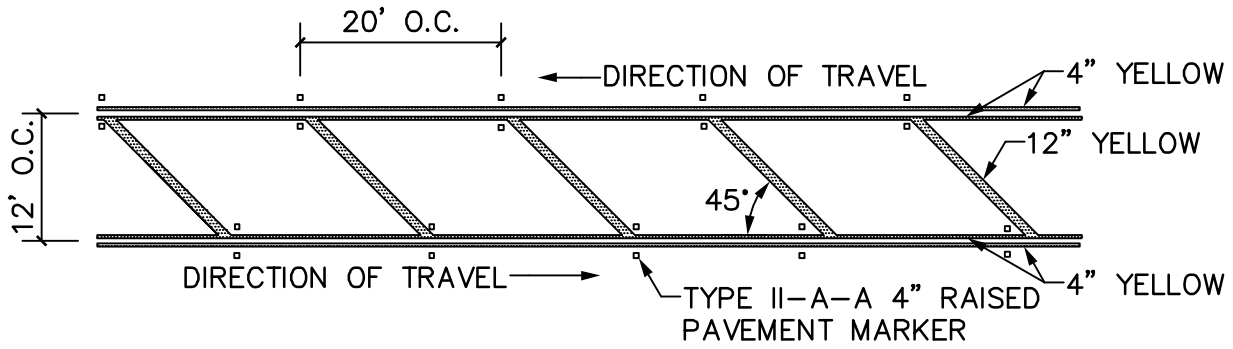

OPPOSING TRAFFIC GORE DETAIL

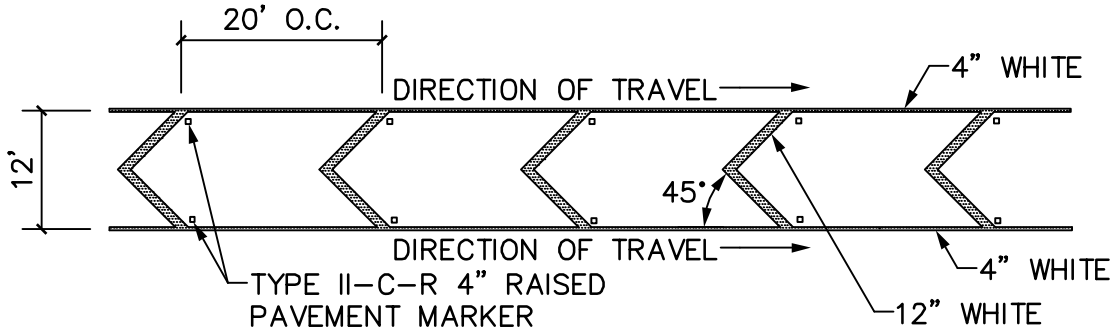

NEUTRAL AREA CHANNELIZATION

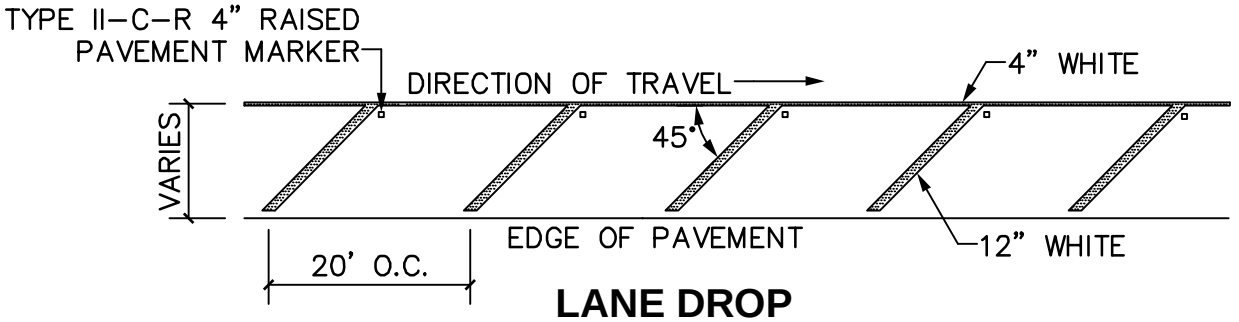

LANE DROP

NOTES:

1. REFER TO TxDOT PM(4)-03 DETAIL "A" FOR DIMENSION BETWEEN PAVEMENT MARKINGS AND MARKERS.
2. REFER TO TECHNICAL SPECIFICATION 321723.

FRISCO PROGRESS IN MOTION.	STANDARD CONSTRUCTION DETAIL **PAVEMENT MARKINGS AND MARKERS** **SHEET 2 OF 2**	SCALE: 1"=20' REVISED: MAR 2012 T02

NOTES:

1. ALL SIGNAGE SHALL BE IN ACCORDANCE WITH THE LATEST REVISIONS OF THE TEXAS MANUAL ON UNIFORM TRAFFIC CONTROL DEVICES AND THE STANDARD HIGHWAY SIGN DESIGN FOR TEXAS (SHSD).
2. LOCATIONS SHOWN FOR SIGNAGE ARE APPROXIMATE; FINAL LOCATIONS MAY CHANGE DUE TO POST CONSTRUCTION CONDITIONS AND PRESENCE OF OTHER PHYSICAL FEATURES. FINAL LOCATION OF ALL SIGNAGE SHALL BE FIELD VERIFIED WITH CITY PRIOR TO INSTALLATION.
3. ALL SIGNS SHALL BE DIAMOND GRADE INTENSITY AND THE SIZES SHALL BE STANDARD UNLESS OTHERWISE NOTED.
4. ALL TRAFFIC SIGNS, POSTS, AND MATERIALS SHALL BE INSTALLED PER DETAIL THIS SHEET.
5. FOR STOP SIGNS THAT WILL ACCEPT FUTURE STREET SIGNS, EXTEND POST ABOVE STOP SIGN SO THAT 2 HOLES ARE AVAILABLE FOR MOUNTING. FOR ALL OTHERS, POST SHALL NOT EXTEND ABOVE SIGN.
6. REFER TO TECHNICAL SPECIFICATION 344150 SMALL ROADSIDE SIGN SUPPORTS AND ASSEMBLIES.

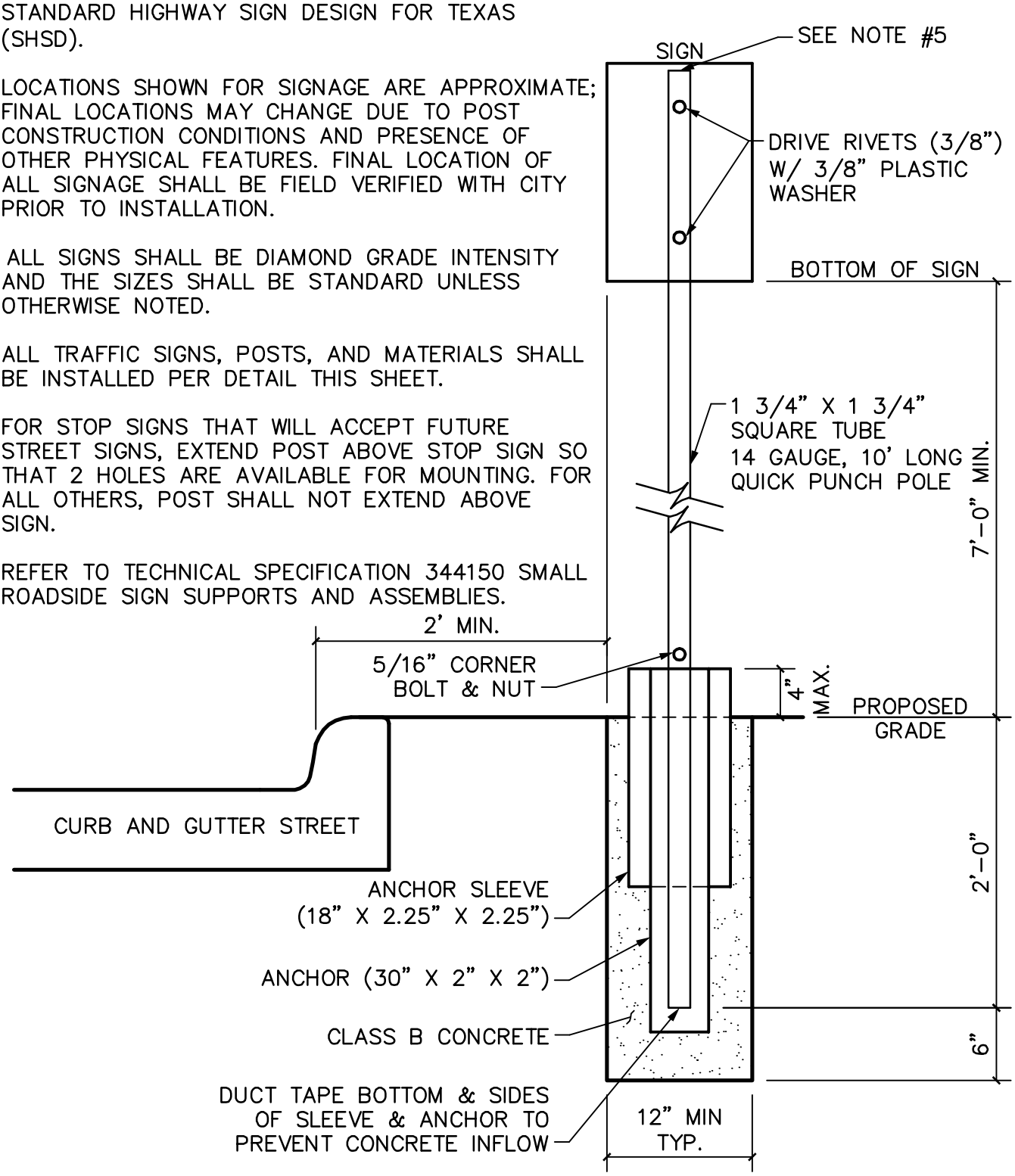

FRISCO
PROGRESS IN MOTION.

STANDARD CONSTRUCTION DETAIL

SIGN POST

SCALE: 1"=1'
REVISED: MAR 2012
T04

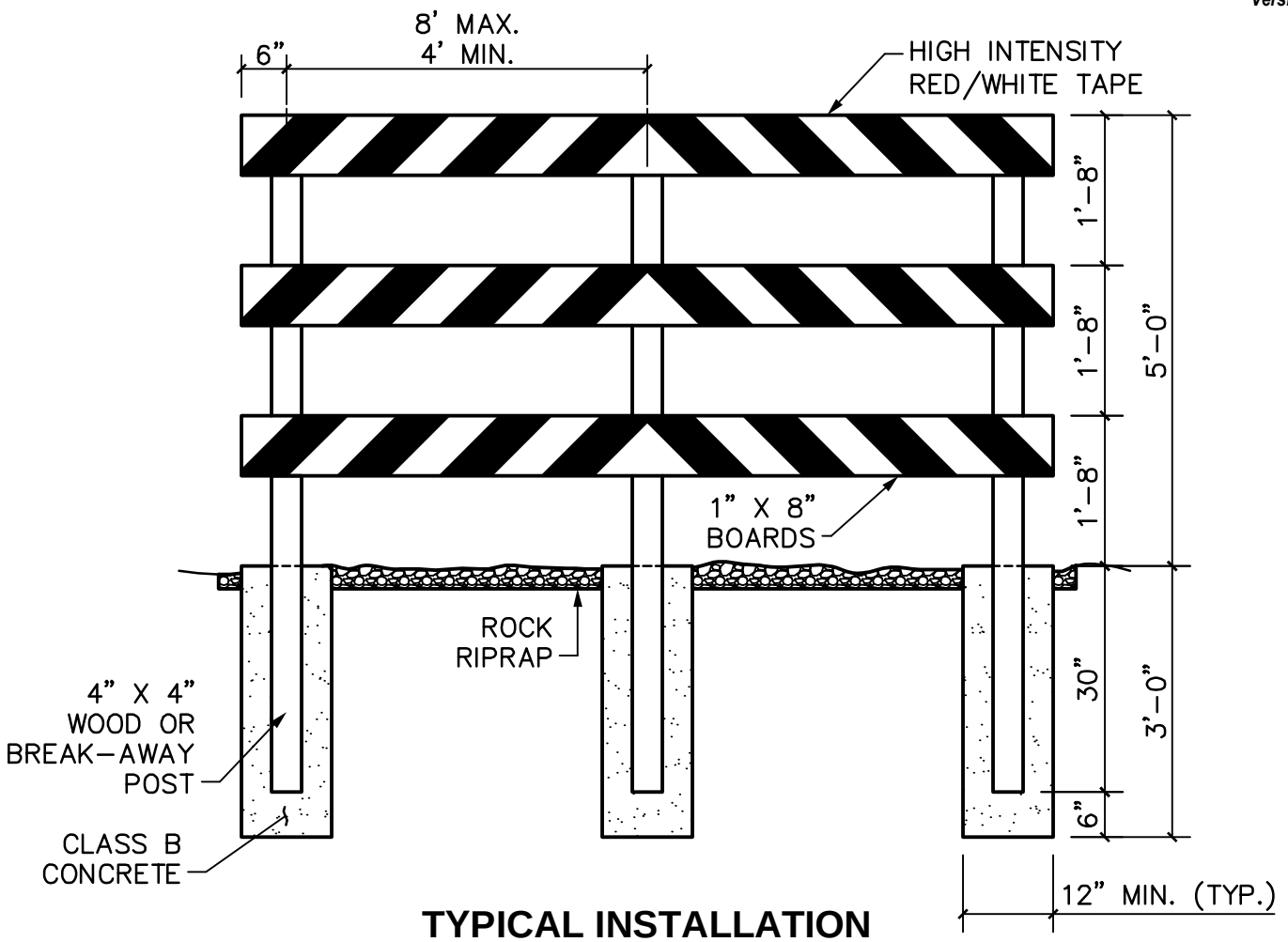

TYPICAL INSTALLATION

NOTES:

1. ALL BARRICADES SHALL BE IN ACCORDANCE WITH THE LATEST REVISION OF THE TEXAS MANUAL ON UNIFORM TRAFFIC CONTROL DEVICES (TMUTCD) AND THE STANDARD HIGHWAY SIGN DESIGNS FOR TEXAS (SHSD).
2. BARRICADE MUST COVER ENTIRE WIDTH OF PAVED ROADWAY OR FIRELANE SURFACE.
3. ALL 1" X 8" AND 4" X 4" WOOD POSTS MUST BE PAINTED WHITE.
4. BARRICADES SHALL BE DESIGNED AND CONSTRUCTED TO THE STANDARDS OF THE COMPLIANT WORK ZONE TRAFFIC CONTROL DEVICE LIST.
5. BARRICADE STRIPING MATERIAL SHALL BE RED AND WHITE HIGH INTENSITY REFLECTIVE SHEETING.
6. DIAGONAL STRIPING SHALL BE PLACED IN A MANNER THAT DIRECTS TRAFFIC IN THE APPROPRIATE DIRECTION OF TRAVEL.
7. PROPOSED BARRICADE STRIPING SHALL BE APPROVED BY THE CITY PRIOR TO PLACEMENT OF BARRICADE.

FRISCO PROGRESS IN MOTION.	STANDARD CONSTRUCTION DETAIL **ROAD CLOSED BARRICADE**	SCALE: 1/2"=1' REVISED: MAR 2012 T05

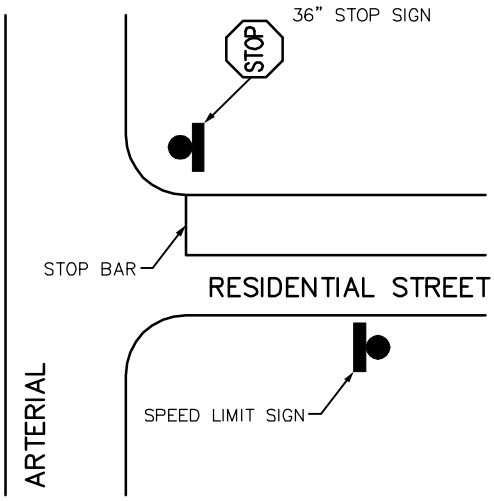

RESIDENTIAL STREET INTERSECTING ARTERIAL

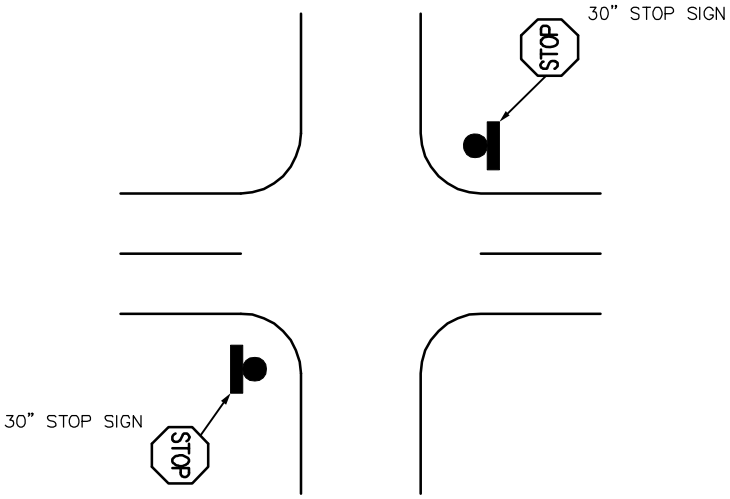

RESIDENTIAL 2-WAY STOP

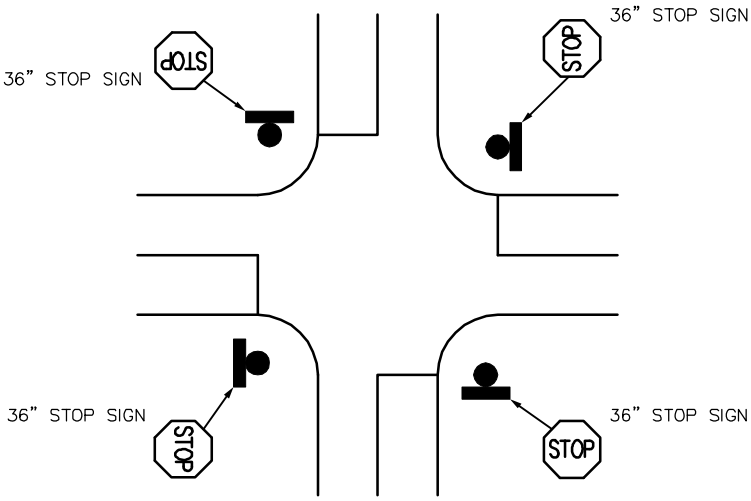

RESIDENTIAL 4-WAY STOP

FRISCO PROGRESS IN MOTION.	STANDARD CONSTRUCTION DETAIL **STOP SIGNS AND STOP BARS**	SCALE: 1/2"=1' REVISED: MAR 2012 T06

LOCATION:
- 9" EXTRUDED BLADE SHALL BE USED AT ALL INTERSECTIONS.

BLADE REQUIREMENTS:
- 9" EXTRUDED BLADE SHALL BE ALUMINUM.
- MAX BLADE LENGTH SHALL BE 72".

LETTERING ALIGNMENT:
- STREET NAME SHALL BE LEFT JUSTIFIED.
- BLOCK NUMBERS SHALL BE LOCATED IN UPPER RIGHT HAND CORNER.
- ABBREVIATED STREET DESIGNATIONS SHALL BE LOCATED IN THE LOWER RIGHT HAND CORNER AND RIGHT JUSTIFIED.

LETTERING FOR 9" EXTRUDED BLADES:
- FONT SHALL BE CLEAR VIEW 2W.
- LETTERS AND NUMBERS IN STREET NAME SHALL BE 6" TALL AND UPPER/LOWER CASE.
- LETTERS IN ABBREVIATED STREET DESIGNATIONS SHALL BE 3" TALL AND ALL UPPERCASE (I.E. LN, PKWY, DR, CT, ETC.)
- BLOCK NUMBERS SHALL BE 3" TALL.

SIGN SHEETING AND COLOR:
- SHEETING SHALL BE DIAMOND GRADE INTENSITY.
- BACKGROUND COLOR SHALL BE GREEN.
- LEGEND SHALL BE WHITE.

NO OUTLET STREETS:
- FOR A STREET WITH ONLY ONE CUL-DE-SAC END (TYPICAL) A STANDARD W 14-2a SHALL BE MOUNTED OVER THE STREET NAME BLADE.
- IN THE CASE OF A STREET WITH TWO CUL-DE-SAC ENDS, 2 STANDARD W 14-2a SIGNS SHALL BE MOUNTED OVER THE STREET NAME BLADE PLACED IN THE APPROPRIATE DIRECTIONS.

BLOCK NUMBER:
- DEVELOPERS/CONTRACTORS ORDERING SIGNS SHOULD CONTACT DEVELOPMENT SERVICES AT 972-292-5390, BLOCK NUMBERS ARE REQUIRED ON ALL STREET NAME BLADES, EVEN IF NO HOUSE/BUILDINGS FRONT ONTO THE STREET.

FRISCO PROGRESS IN MOTION.	STANDARD CONSTRUCTION DETAIL **STREET NAME BLADE**	SCALE: 1/2"=1' REVISED: MAR 2012 T08

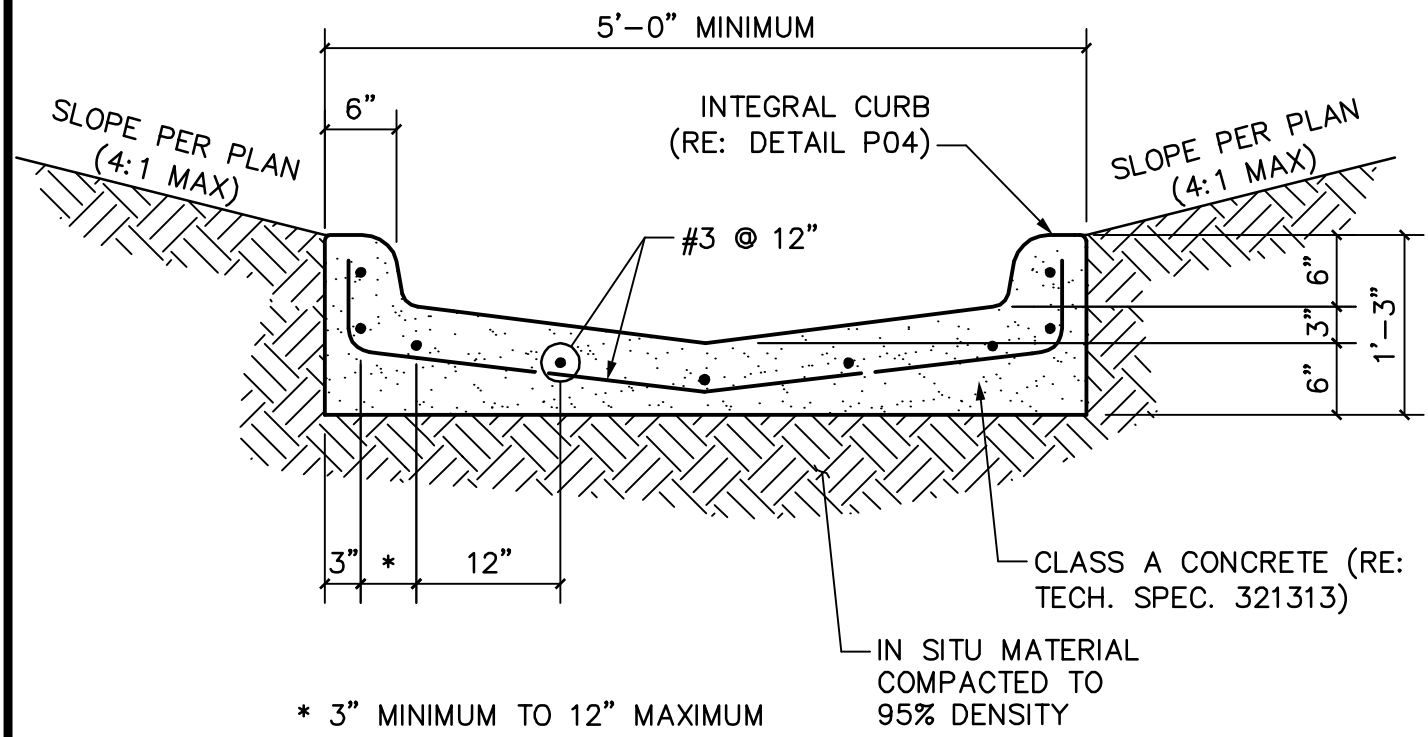

NOTES:

1. IF FLUME IS 7' OR WIDER, INSTALL 7' X 6" DIAMETER STEEL BOLLARDS (FILLED WITH CONCRETE) BURIED TO 4' DEPTH AT BOTH START AND END OF FLUME.
2. SLOPES SHALL BE STABILIZED WITH VEGETATION OR OTHER APPROVED METHODS.

FRISCO PROGRESS IN MOTION.	STANDARD CONSTRUCTION DETAIL **CURBED FLUME**	SCALE: 3/4"=1'–0" REVISED: MAR 2012 D01

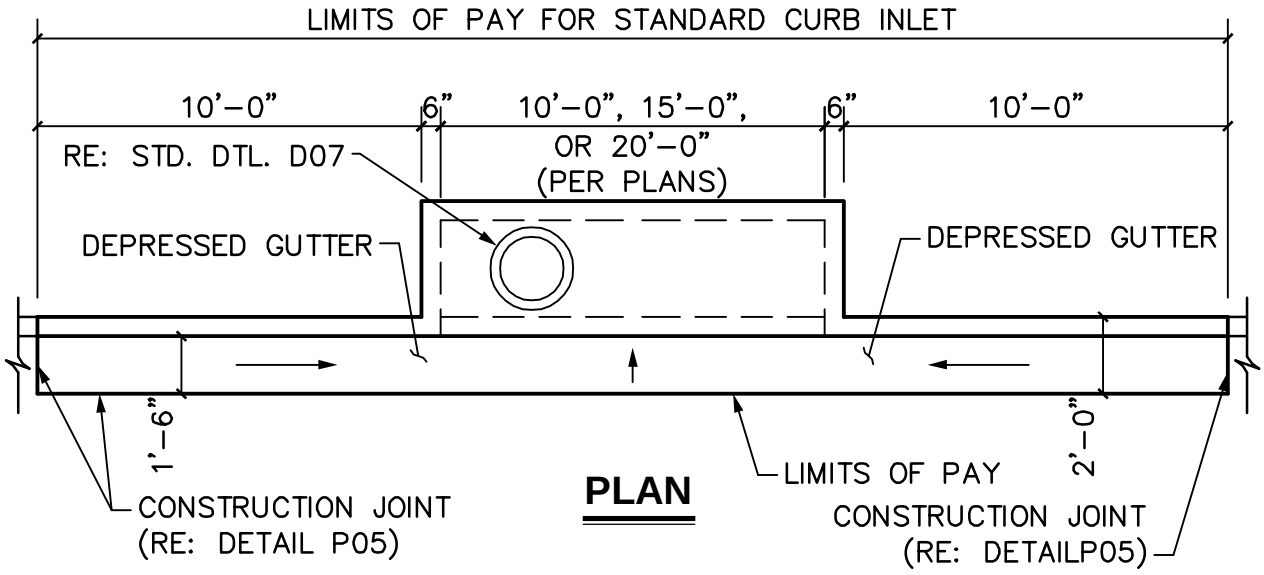

PLAN

NOTES:

1. TOP OF INLET TO SLOPE 2% TOWARDS STREET OR PER PLAN.
2. CENTER SUPPORT BEAM REQUIRED FOR 15' AND 20' STANDARD CURB INLETS.
3. ADDITIONAL REINFORCING STEEL TO BE PLACED AROUND MANHOLE OPENING.

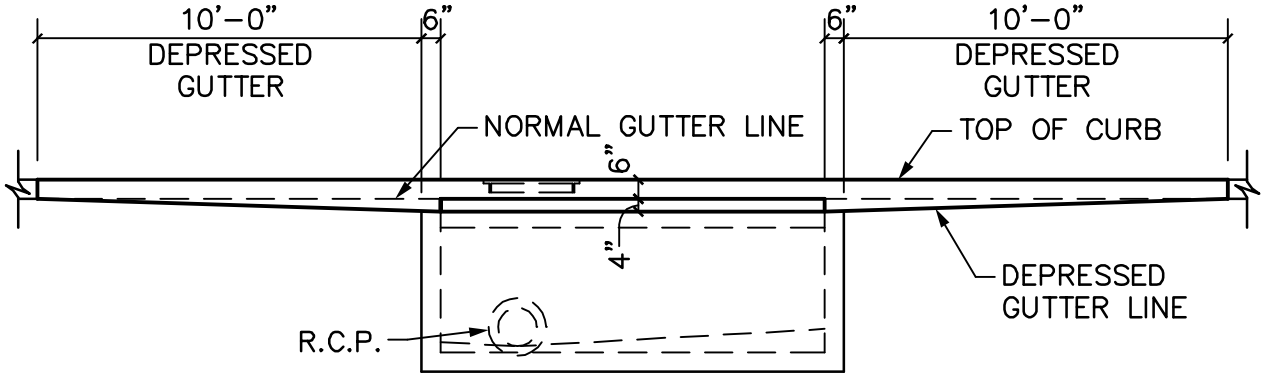

PROFILE

NOTE:

1. MANHOLE TO BE PLACED AT LOW END OF INLET. TWO MANHOLES ARE REQUIRED ON 15' AND 20' INLETS ONLY IF THE INSIDE HEIGHT OF THE INLET IS LESS THAN 4 FEET.

FRISCO PROGRESS IN MOTION.	STANDARD CONSTRUCTION DETAIL **STANDARD CURB INLET** **SHEET 1 OF 2**	SCALE: 1"=5' REVISED: MAR 2012 D02

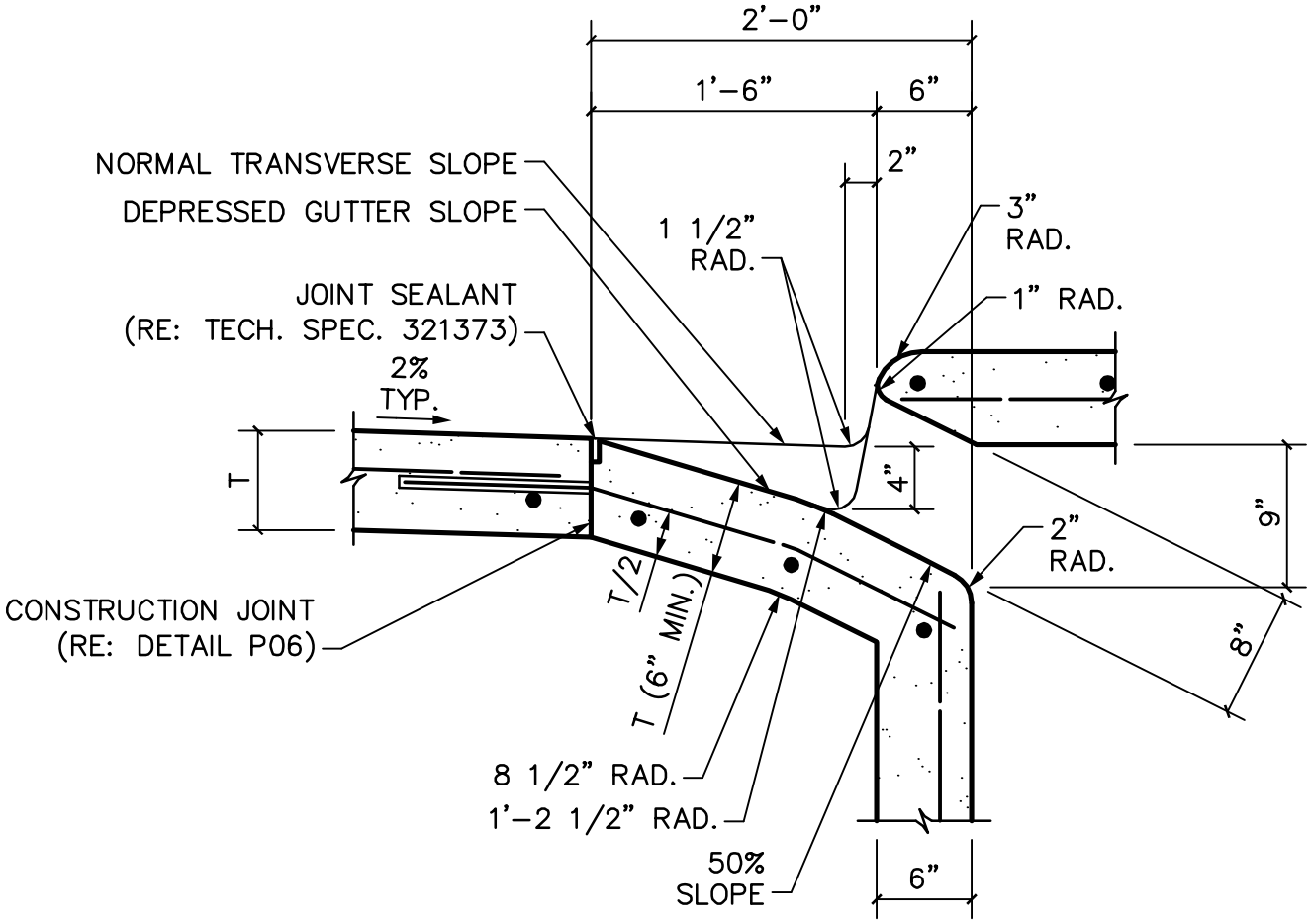

THROAT SECTION

FRISCO PROGRESS IN MOTION.	STANDARD CONSTRUCTION DETAIL **STANDARD CURB INLET** **SHEET 2 OF 2**	SCALE: 1"=1'-0" REVISED: MAR 2012 D03

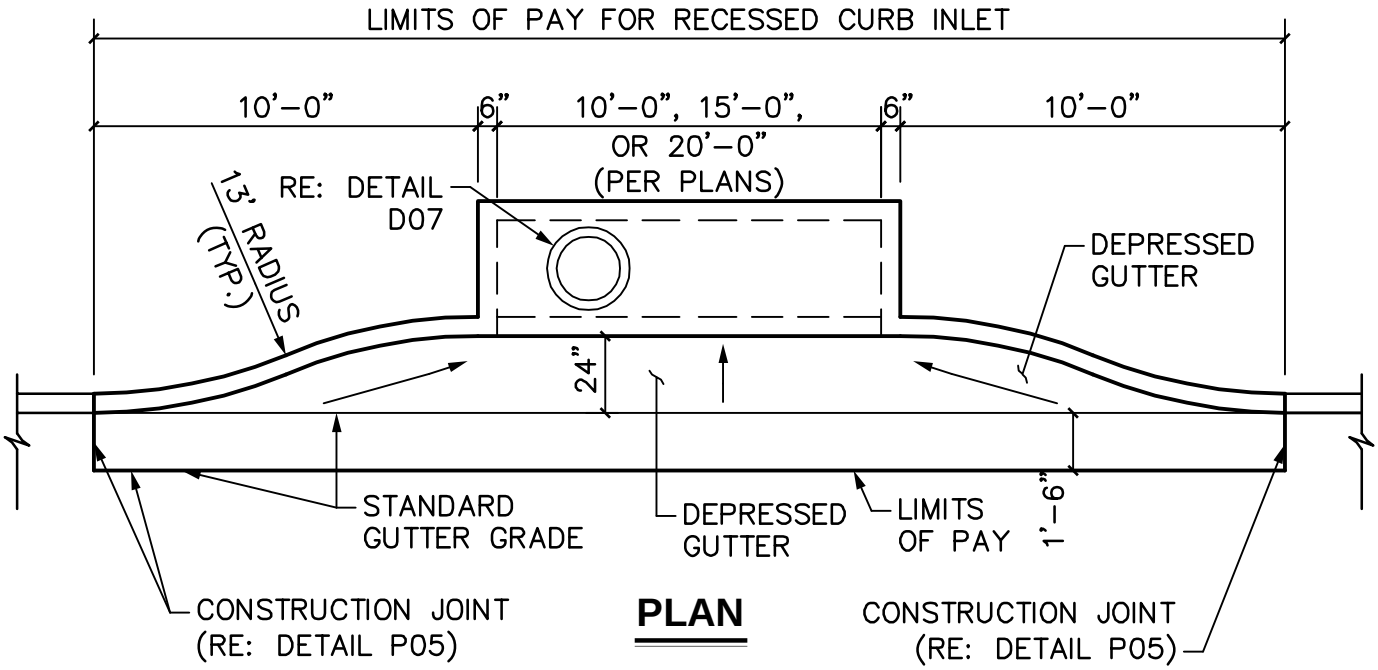

PLAN

NOTES:

1. TOP OF INLET TO SLOPE 2% TOWARDS STREET OR PER PLAN.
2. CENTER SUPPORT BEAM REQUIRED FOR 15' AND 20' STANDARD CURB INLETS.
3. ADDITIONAL REINFORCING STEEL TO BE PLACED AROUND MANHOLE OPENING.

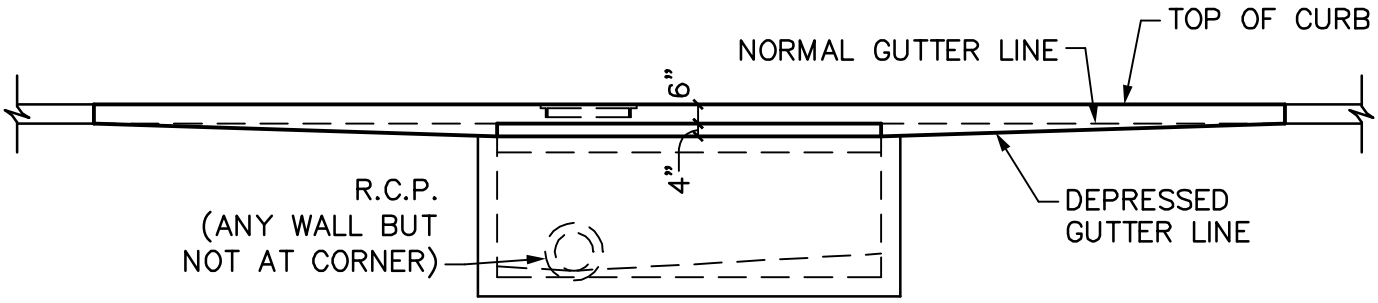

PROFILE

NOTE:

1. MANHOLE TO BE PLACED AT LOW END OF INLET. TWO MANHOLES ARE REQUIRED ON 15' AND 20' INLETS ONLY IF THE INSIDE HEIGHT OF THE INLET IS LESS THAN 4 FEET.

FRISCO PROGRESS IN MOTION.	STANDARD CONSTRUCTION DETAIL **RECESSED CURB INLET** **SHEET 1 OF 2**	SCALE: 1"=5' REVISED: MAR 2012 D04

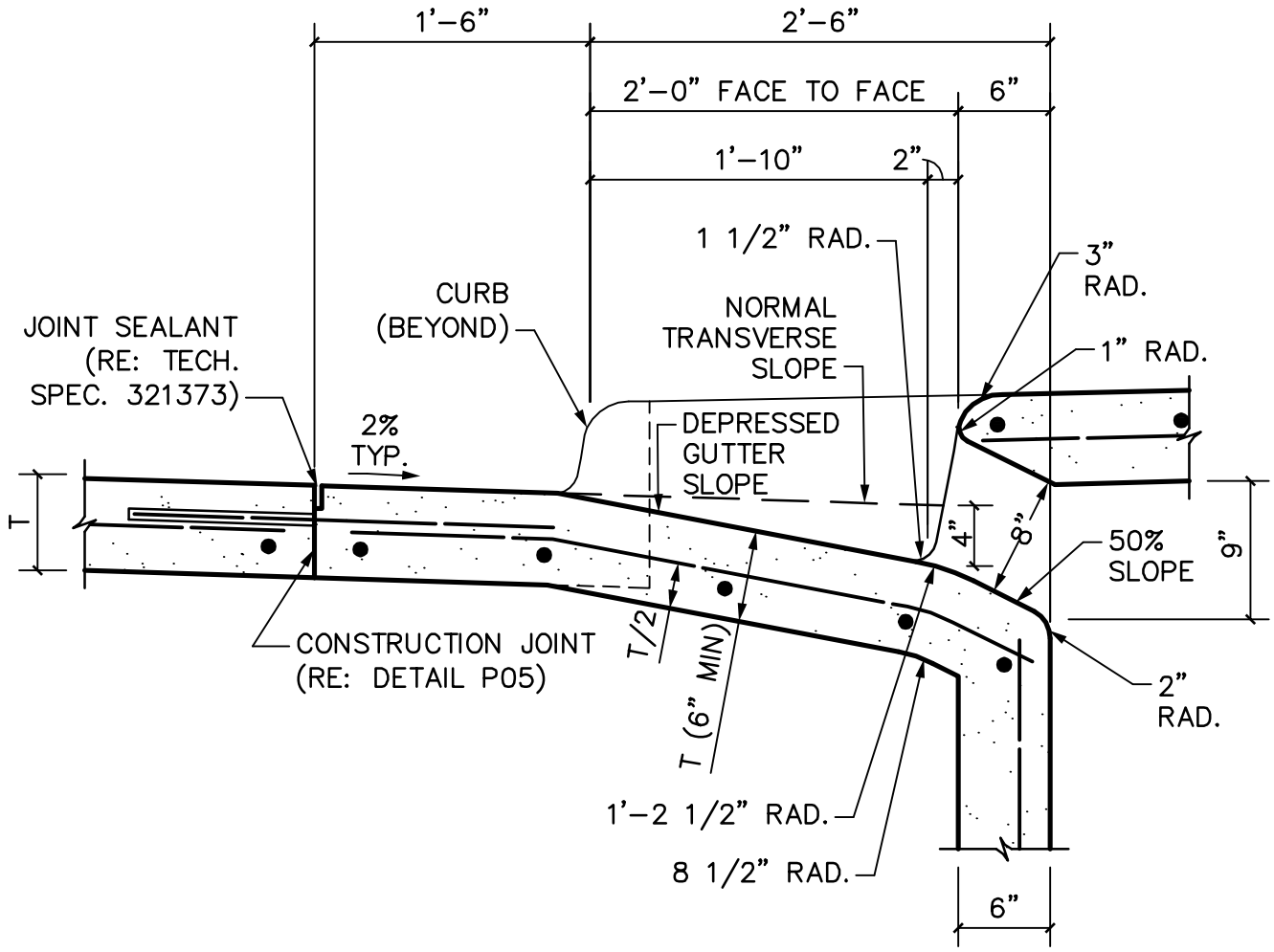

THROAT SECTION

FRISCO PROGRESS IN MOTION.	STANDARD CONSTRUCTION DETAIL **RECESSED CURB INLET** **SHEET 2 OF 2**	SCALE: 1"=1'-0" REVISED: MAR 2012 D05

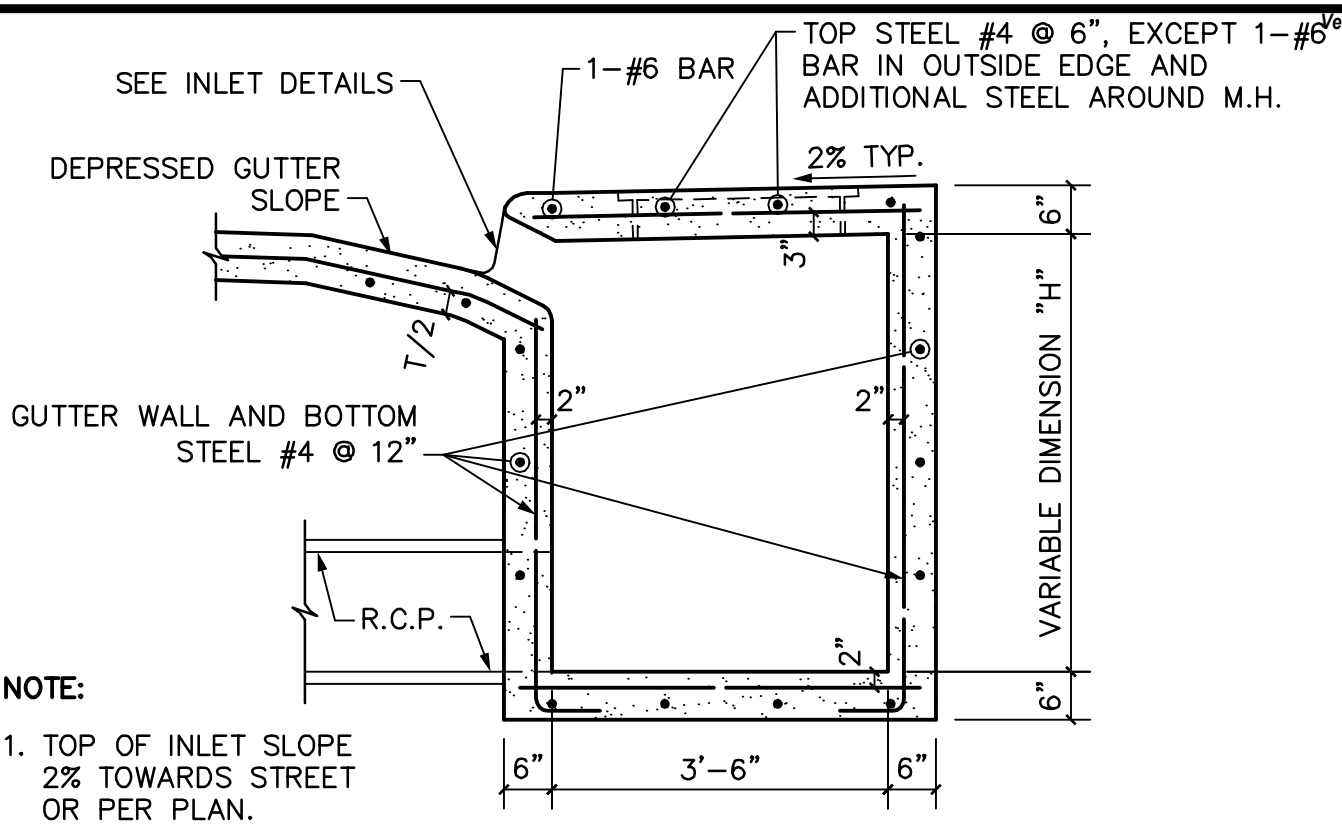

NOTE:

1. TOP OF INLET SLOPE 2% TOWARDS STREET OR PER PLAN.

INLET SECTION FOR RECESSED AND STANDARD INLETS

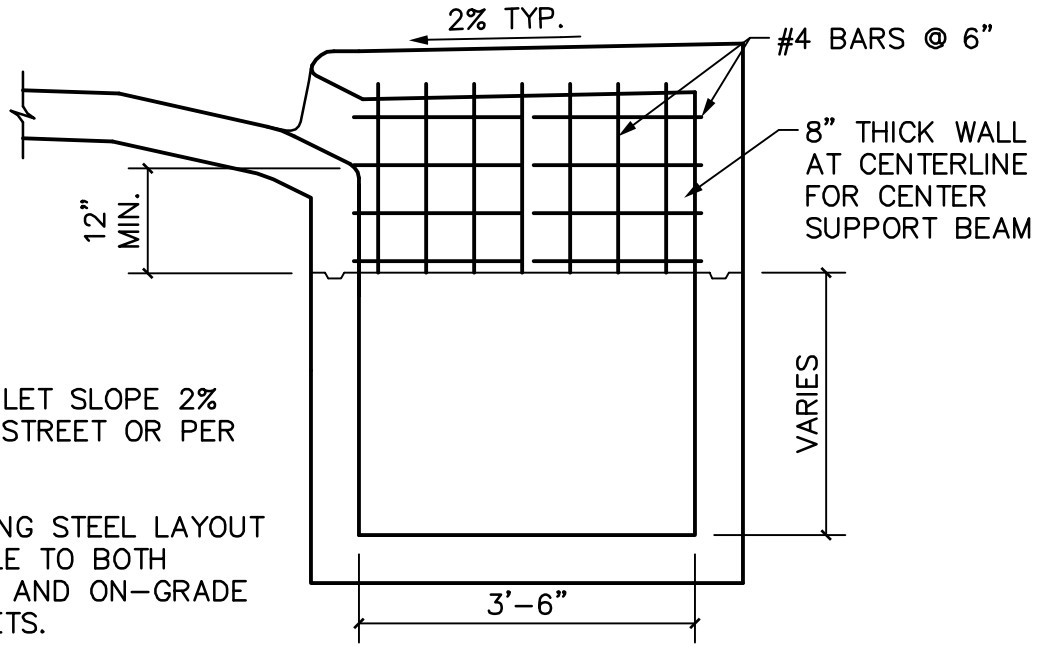

NOTES:

1. TOP OF INLET SLOPE 2% TOWARDS STREET OR PER PLAN.
2. REINFORCING STEEL LAYOUT APPLICABLE TO BOTH RECESSED AND ON-GRADE CURB INLETS.

CENTER SUPPORT BEAM FOR 15' & 20' RECESSED AND STANDARD INLETS

FRISCO PROGRESS IN MOTION.	STANDARD CONSTRUCTION DETAIL **CENTER SUPPORT BEAM & INLET SECTION FOR RECESSED AND STANDARD INLETS**	SCALE: 1/2"=1'-0" REVISED: MAR 2012 D06

GENERAL NOTES:

1. ALL CONCRETE SHALL BE CLASS A.
2. ALL REINFORCING STEEL SHALL BE NEW BILLET STEEL CONFORMING TO ASTM A–615.
3. CHAMFER ALL EXPOSED CORNERS 3/4" EXCEPT WHERE OTHERWISE NOTED.
4. DIMENSIONS RELATING TO REINFORCING STEEL ARE TO CENTERS OF BARS.
5. FIELD CUT AND BEND BARS AS NECESSARY TO ACCOMMODATE STORM SEWER PIPE.
6. ALL REINFORCING STEEL SHALL HAVE A MINIMUM COVER OF 2".
7. RECESSED CURB INLETS SHALL BE REQUIRED ON ALL A THROUGH D STREETS. STANDARD INLETS WILL BE PERMITTED ON E THROUGH G STREETS.
8. ROCK FOUNDATION SHALL BE USED DURING PREFABRICATED INLET BOX INSTALLATION. 6" FOR BACKFILL WITH FLOWABLE FILL TO FILL VOIDS OR COMPACT WITH SELECT SURPLUS EXCAVATION COMPACTED IN 8" LIFTS TO 95% STANDARD PROCTOR DENSITY.
9. STANDARD CURB INLET SIZES ARE 10', 15', OR 20'. NO OTHER SIZES WILL BE ALLOWED WITHOUT APPROVAL FROM DIRECTOR OF ENGINEERING SERVICES.

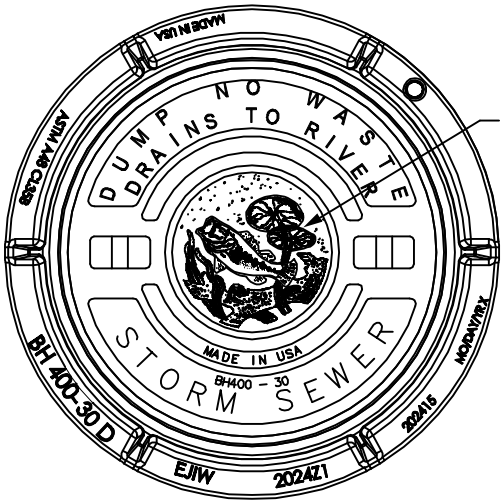

SPECIAL LOGO INSERT PER CITY REQUIREMENT

INLET LID DETAIL

NOTE:

1. MANHOLE COVER AND FRAME SHALL BE SELECTED FROM THE APPROVED MATERIALS LIST.

FRISCO PROGRESS IN MOTION.	STANDARD CONSTRUCTION DETAIL **INLET LID DETAIL AND GENERAL NOTES**	SCALE: 1"=1'–0" REVISED: MAR 2012 D07

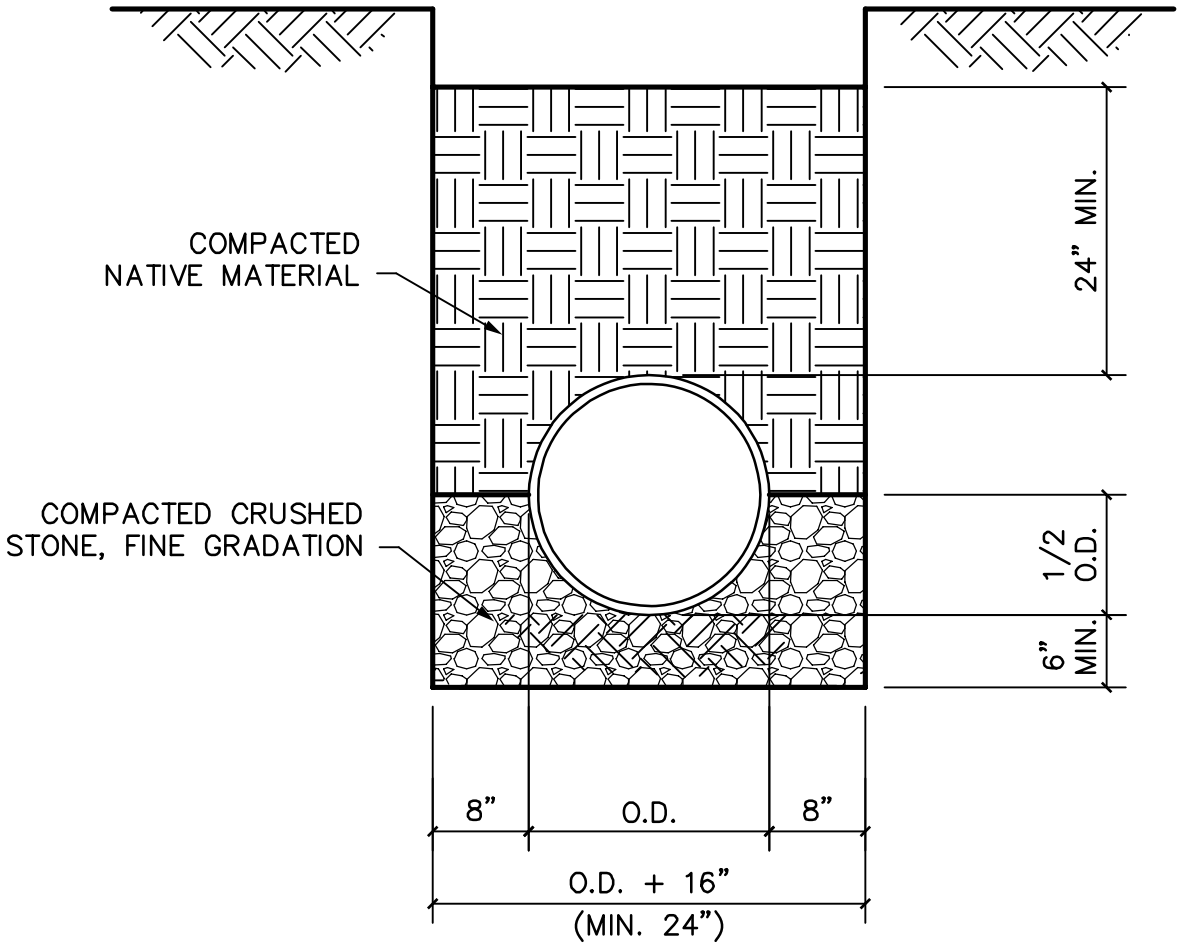

CLASS "B"

NOTES:

1. UTILIZE CLASS "B" EMBEDMENT FOR RCP STORM DRAIN INSTALLATIONS.
2. REFER TO TECHNICAL SPECIFICATION 330510 TRENCHING, BACKFILLING AND COMPACTION.
3. BEDDING DEPTH MEASURED FROM OUTSIDE THE PIPE BELL.
4. FINAL BACKFILL MOISTURE TREATED TO 3% ABOVE OPTIMUM AT 95% STANDARD PROCTOR FOR EAGLE FORD AND 0 ±4% FOR AUSTIN CHALK.

FRISCO PROGRESS IN MOTION.	STANDARD CONSTRUCTION DETAIL **EMBEDMENT "B" (STORM)**	SCALE: 3/4"=1'-0" REVISED: MAR 2012 U02

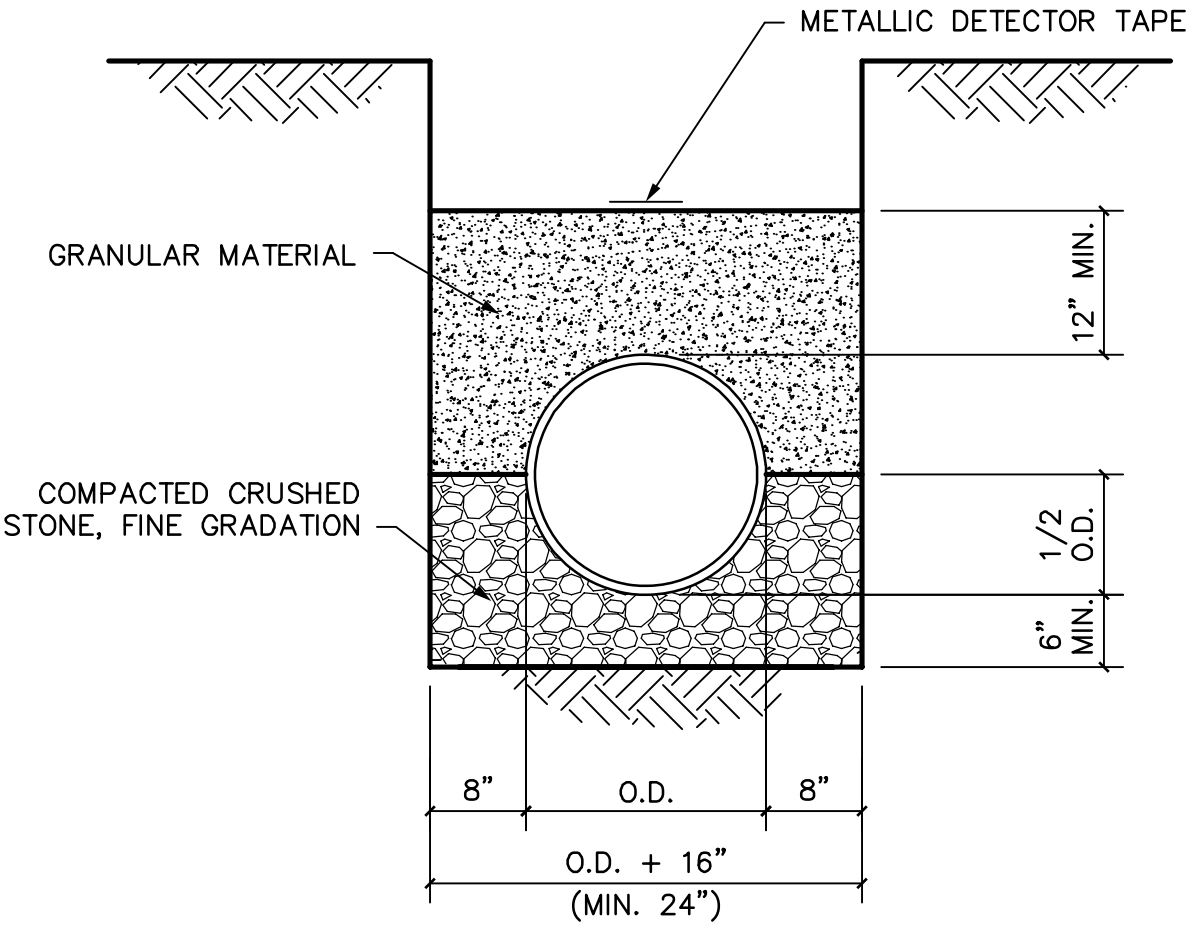

CLASS "B+"

NOTES:

1. UTILIZE CLASS "B+" EMBEDMENT FOR PVC WATER LINE INSTALLATIONS.
2. REFER TO TECHNICAL SPECIFICATION 330510 TRENCHING, BACKFILLING AND COMPACTION.
3. BEDDING DEPTH MEASURED FROM OUTSIDE THE PIPE BELL.
4. FINAL BACKFILL MOISTURE TREATED TO 3% ABOVE OPTIMUM AT 95% STANDARD PROCTOR FOR EAGLE FORD AND 0 ±4% FOR AUSTIN CHALK.

FRISCO PROGRESS IN MOTION.	STANDARD CONSTRUCTION DETAIL **EMBEDMENT "B+" (WATER)**	SCALE: 3/4"=1'-0" REVISED: APRIL 2012 U03

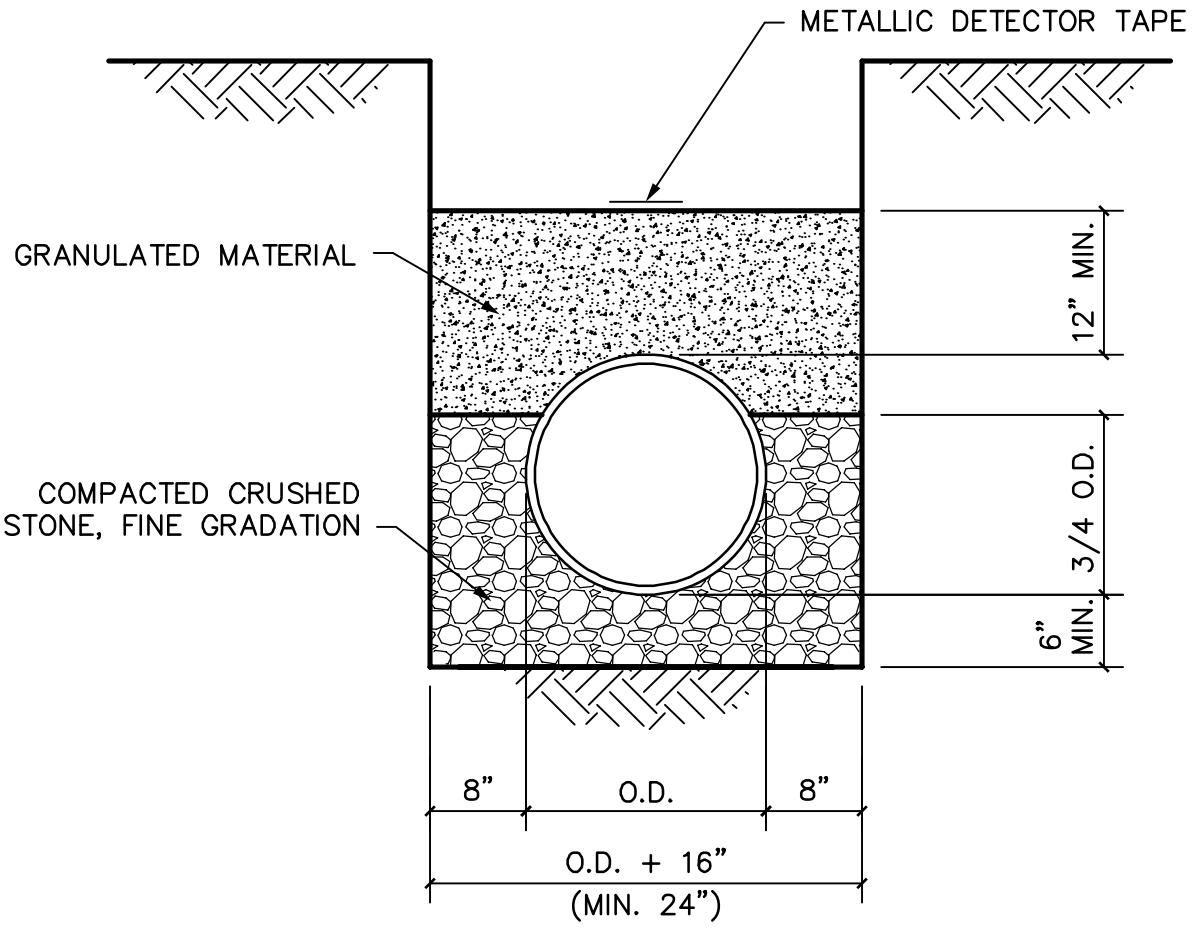

CLASS "B-1"

NOTES:

1. UTILIZE CLASS "B–1" EMBEDMENT FOR PVC (SDR 35) WASTEWATER LINE INSTALLATIONS.
2. REFER TO TECHNICAL SPECIFICATION 330510 TRENCHING, BACKFILLING AND COMPACTION.
3. BEDDING DEPTH MEASURED FROM OUTSIDE THE PIPE BELL.
4. FINAL BACKFILL MOISTURE TREATED TO 3% ABOVE OPTIMUM AT 95% STANDARD PROCTOR FOR EAGLE FORD AND 0 ±4% FOR AUSTIN CHALK.

FRISCO PROGRESS IN MOTION.	STANDARD CONSTRUCTION DETAIL **EMBEDMENT "B-1" (WASTEWATER)**	SCALE: 3/4"=1'–0" REVISED: APRIL 2012 U04

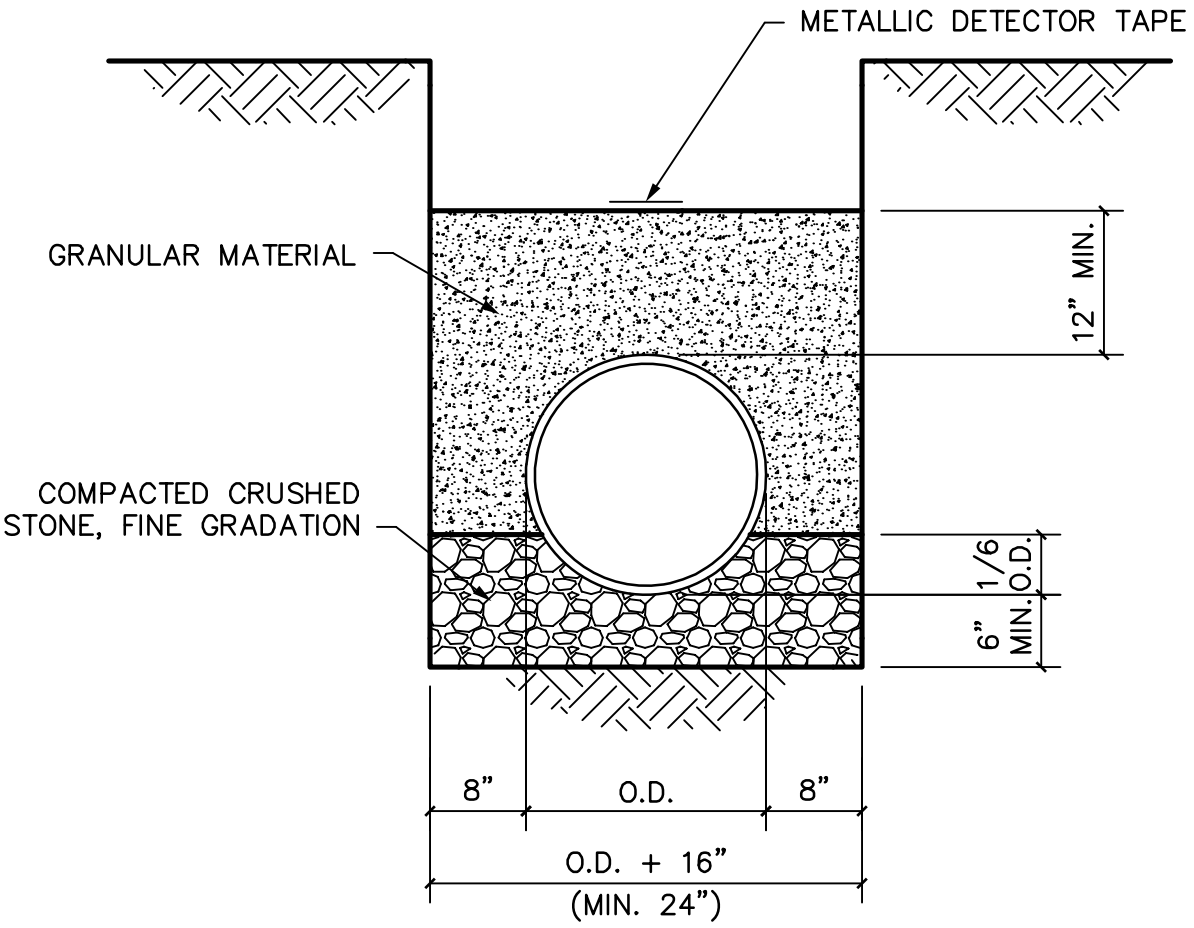

CLASS "C+"

NOTES:

1. UTILIZE CLASS "C+" EMBEDMENT FOR DUCTILE IRON.
2. REFER TO TECHNICAL SPECIFICATION 330510 TRENCHING, BACKFILLING AND COMPACTION.
3. BEDDING DEPTH MEASURED FROM OUTSIDE THE PIPE BELL.
4. FINAL BACKFILL MOISTURE TREATED TO 3% ABOVE OPTIMUM AT 95% STANDARD PROCTOR FOR EAGLE FORD AND 0 ±4% FOR AUSTIN CHALK.

FRISCO PROGRESS IN MOTION.	STANDARD CONSTRUCTION DETAIL **EMBEDMENT "C+"**	SCALE: 3/4"=1'-0" REVISED: APRIL 2012 U05

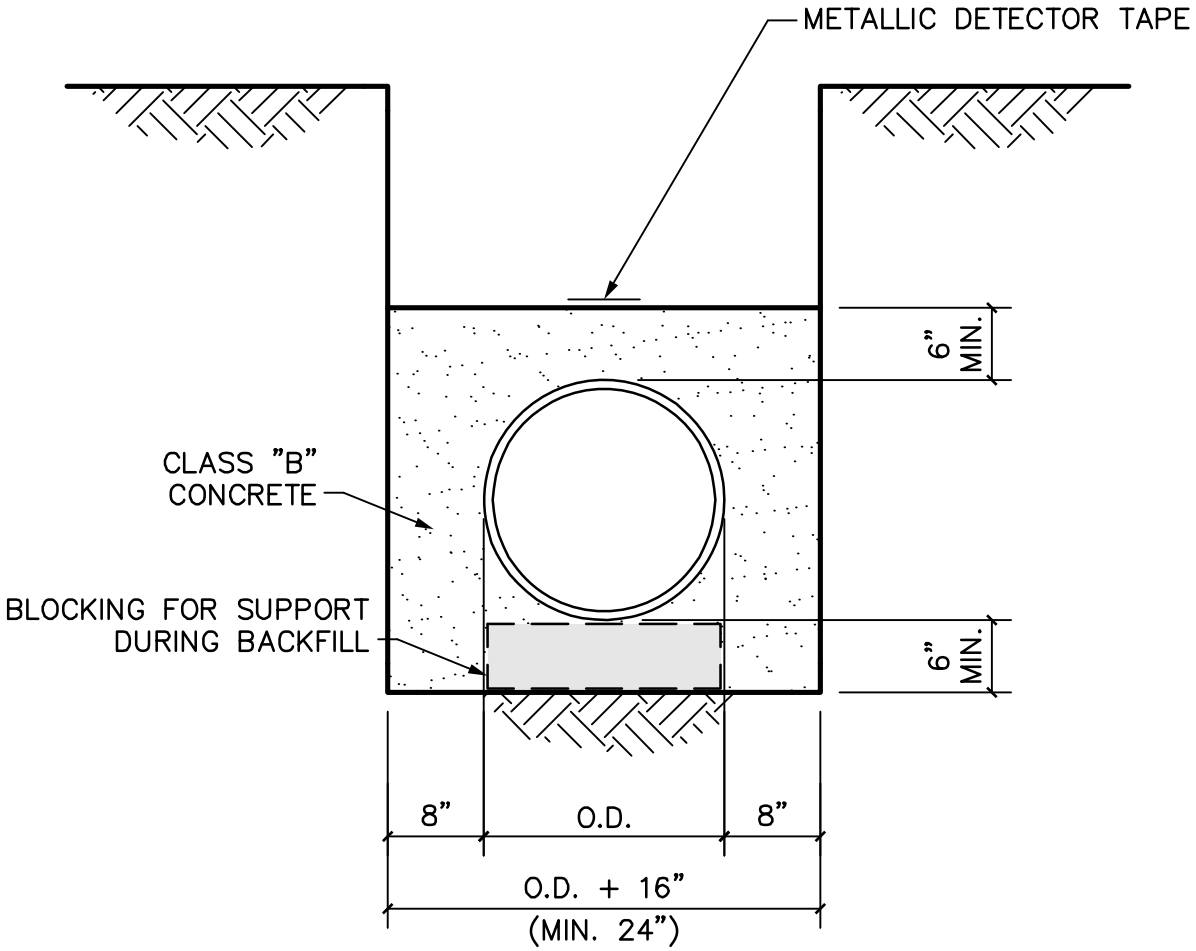

CLASS "G"

NOTES:

1. REFER TO TECHNICAL SPECIFICATION 330510 TRENCHING, BACKFILLING AND COMPACTION.
2. BEDDING DEPTH MEASURED FROM OUTSIDE OF PIPE BELL.
3. FINAL BACKFILL MOISTURE TREATED TO 3% ABOVE OPTIMUM AT 95% STANDARD PROCTOR FOR EAGLE FORD AND 0 ±4% AUSTIN CHALK.

FRISCO PROGRESS IN MOTION.	STANDARD CONSTRUCTION DETAIL **EMBEDMENT "G"**	SCALE: 3/4"=1'-0" REVISED: MAR 2012 U06

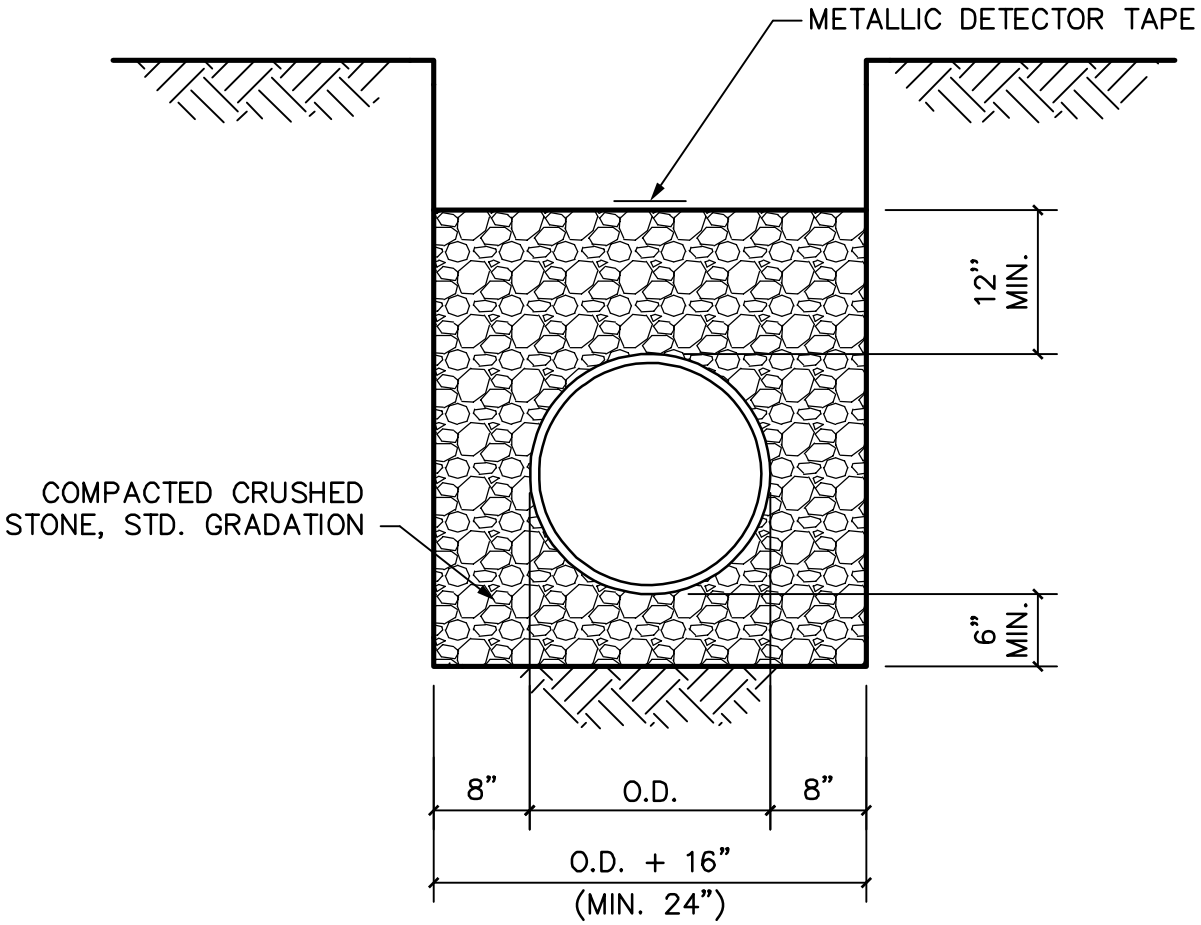

CLASS "H"

NOTES:

1. UTILIZE CLASS "H" EMBEDMENT FOR PVC (SDR 35) WASTEWATER LINE INSTALLATIONS WITH 15 FEET OF COVER OR GREATER.
2. REFER TO TECHNICAL SPECIFICATION 330510 TRENCHING, BACKFILLING AND COMPACTION.
3. BEDDING DEPTH MEASURED FROM OUTSIDE OF PIPE BELL.

FRISCO PROGRESS IN MOTION.	STANDARD CONSTRUCTION DETAIL **EMBEDMENT "H" (WASTEWATER)**	SCALE: 3/4"=1'-0" REVISED: MAR 2012 U07

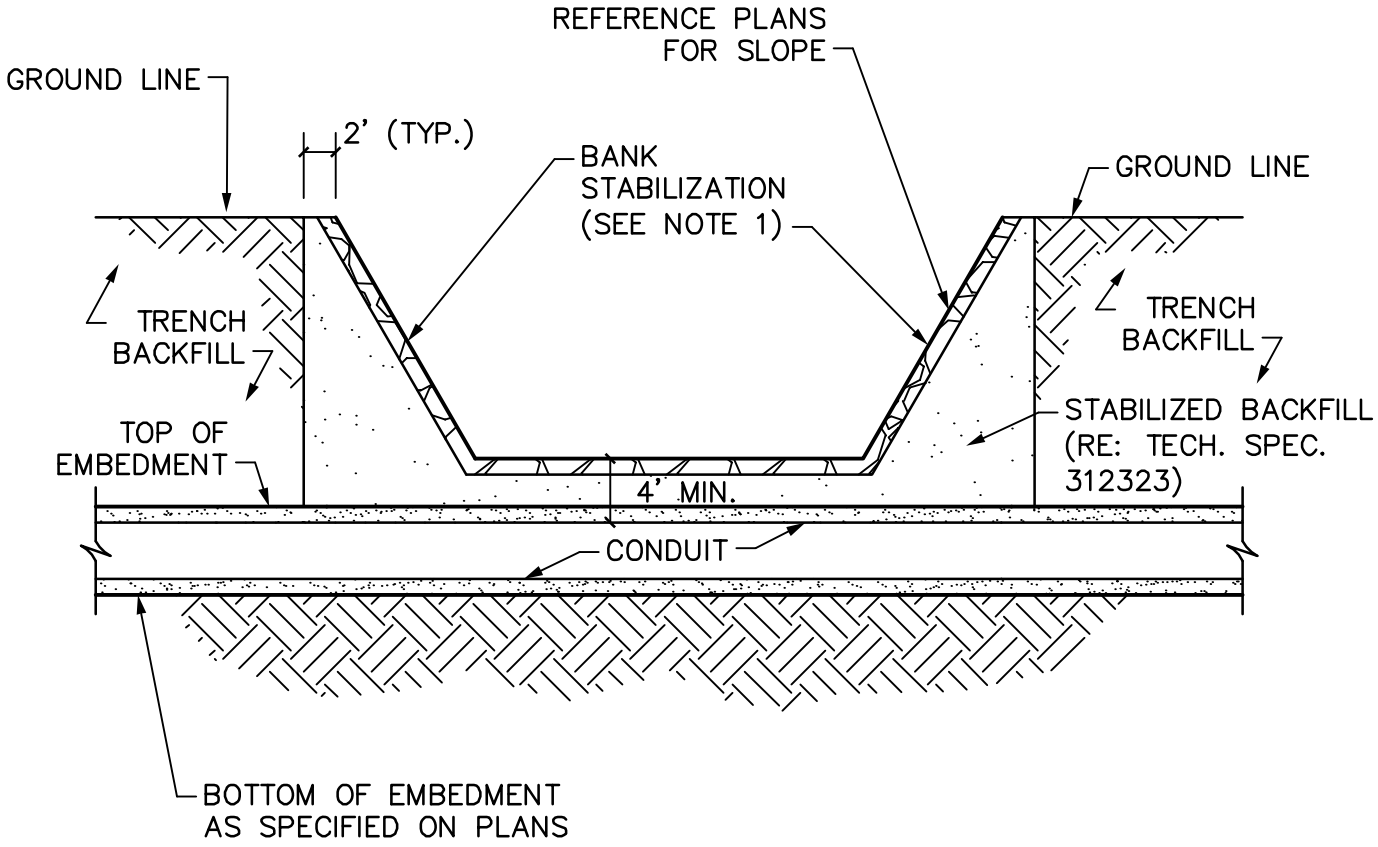

NOTE:

1. BANK STABILIZATION SHALL BE DESIGNED AND SPECIFIED ON THE PLANS IN ACCORDANCE WITH NCTCOG iSWM DESIGN MANUAL.

FRISCO PROGRESS IN MOTION.	STANDARD CONSTRUCTION DETAIL **INFILTRATION PROTECTION** **CONDUIT UNDER CHANNEL**	SCALE: 1/12"=1' REVISED: MAR 2012 U08

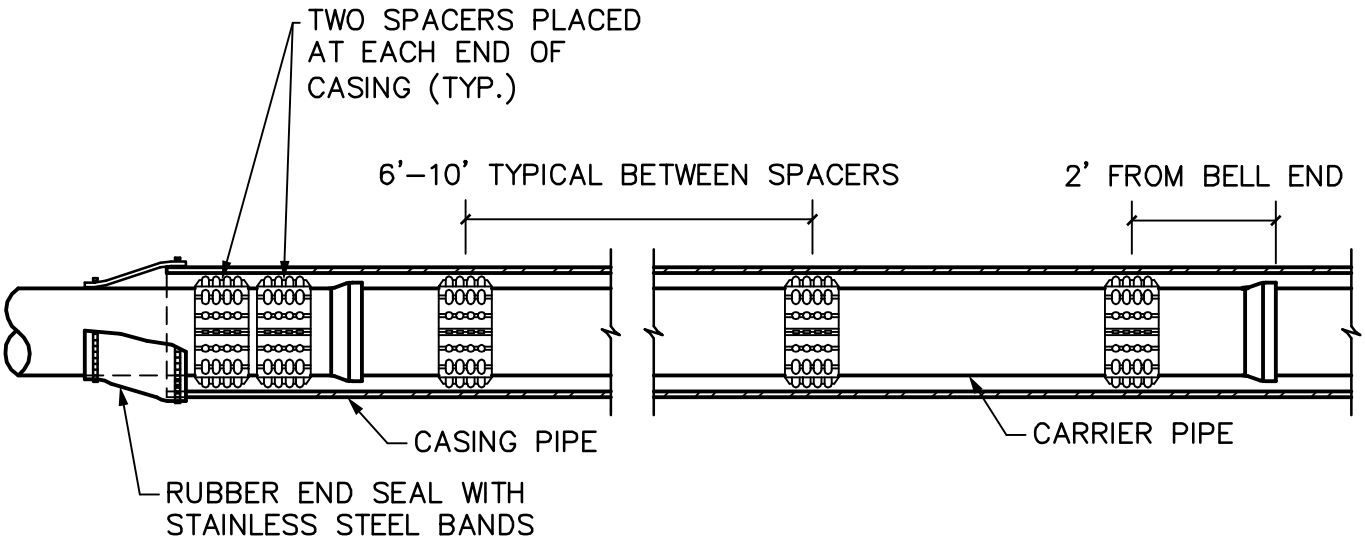

CASING SPACER PROFILE

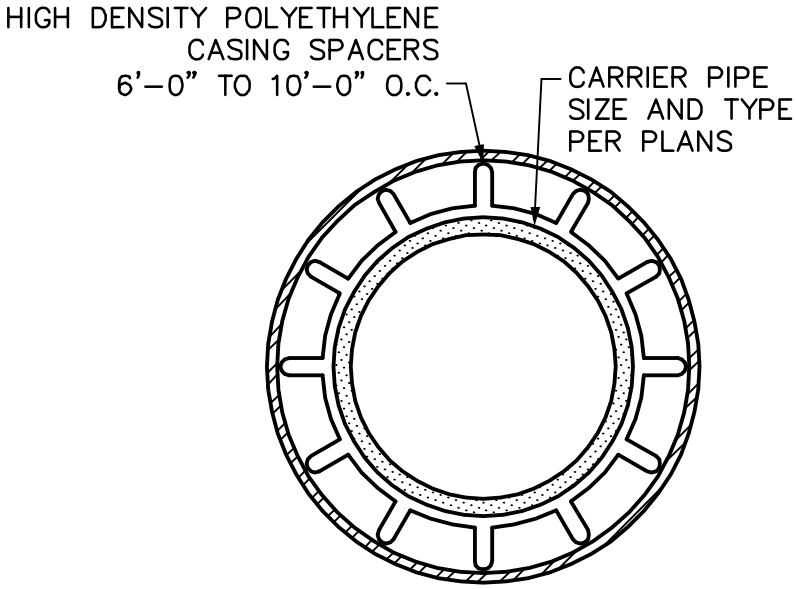

CASING SPACER

NOTE:

1. REFER TO APPROVED MATERIALS LIST FOR CASING SPACERS.

FRISCO PROGRESS IN MOTION.	STANDARD CONSTRUCTION DETAIL **CASING SPACERS**	SCALE: 3/8"=1'–0" REVISED: MAR 2012 U09

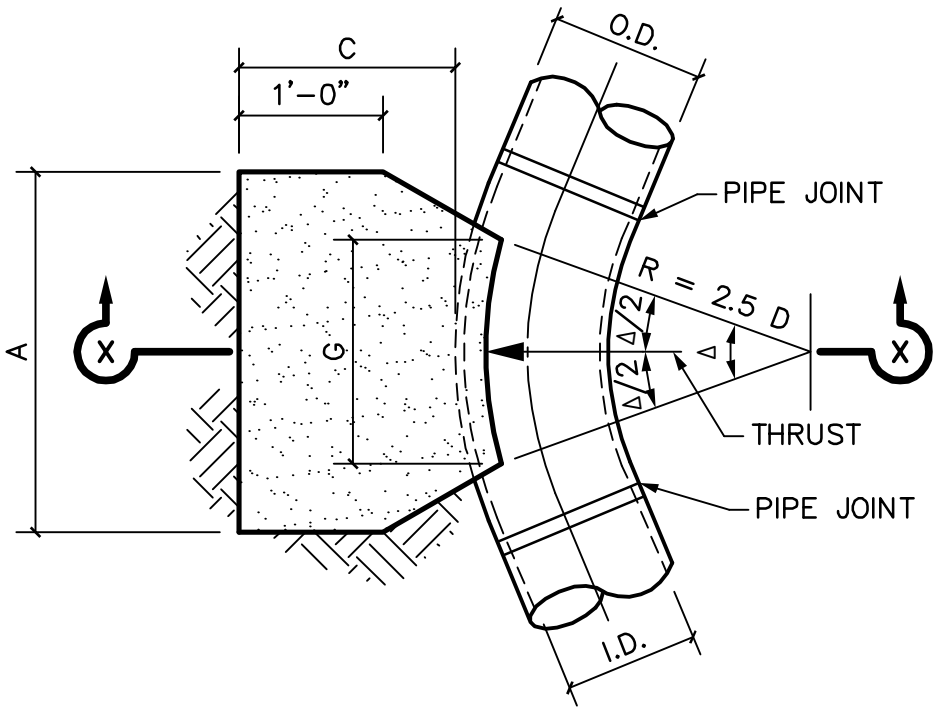

PLAN

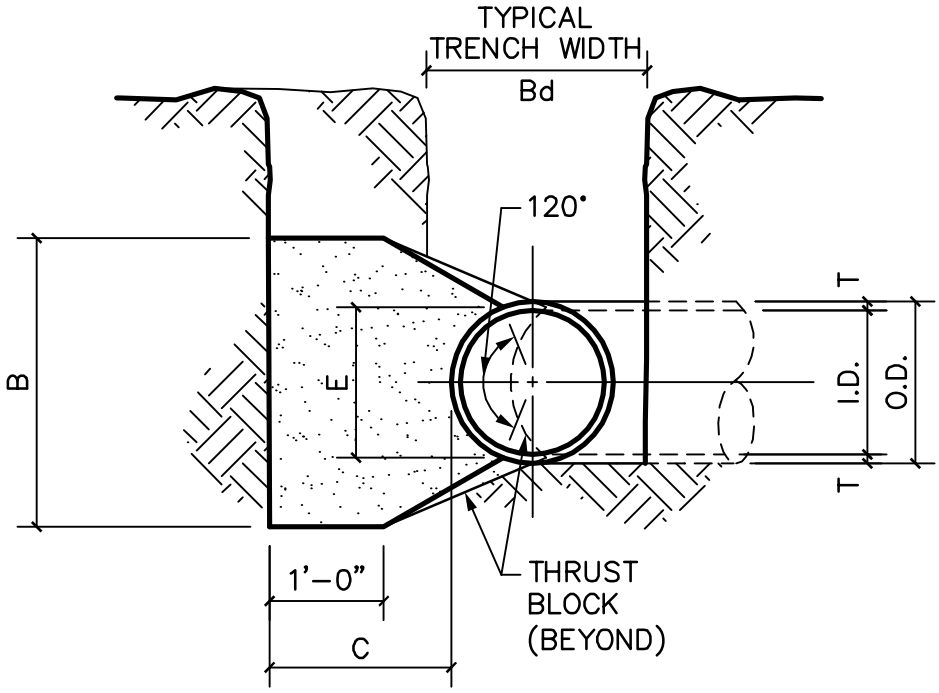

SECTION X-X

NOTES:

1. REFER TO STANDARD DEATIL W02 AND W03 FOR TABLES OF DIMENSIONS AND QUANTITIES.

2. REFER TO STANDARD DETAIL W05 FOR GENERAL NOTES.

FRISCO PROGRESS IN MOTION.	STANDARD CONSTRUCTION DETAIL **HORIZONTAL THRUST BLOCK AT PIPE BEND** **SHEET 1 OF 3**	SCALE: 3/4"=1'–0" REVISED: MAR 2012 W01

I.D. (IN.)	T (IN.)	Δ = 11.25° C (IN.)	Δ ≥ 22.50° C (IN.)	E (IN.)
4,6,8	0.4	1.5	1.5	0.9
10,12	0.5	1.5	1.5	1.2
16,18	0.6	1.5	1.5	1.6
20	0.7	1.5	1.5	1.8
24	0.9	1.5	1.5	2.1
30	2.9	1.5	1.9	2.6
36	4.5	1.5	2.3	3.3
42	5.0	1.8	2.6	3.8
48	5.5	2.0	3.0	4.3
54	6.0	2.3	3.4	4.8
60	6.5	2.5	3.8	5.3
66	6.8	2.8	4.1	5.7
72	7.5	3.0	4.5	6.3
78	7.5	3.3	4.9	6.7
84	8.0	3.5	5.3	7.2
90	8.5	3.8	5.6	7.7
96	9.0	4.0	6.0	8.2

I.D. (IN.)	Δ = 11.25°							
			EARTH			ROCK		
	G (FT.)	THRUST (TONS)	A (FT.)	B (FT.)	VOL. (C.Y.)	A (FT.)	B (FT.)	VOL. (C.Y.)
4,6,8	0.4	1.0	1.0	1.5	0.1	1.0	1.0	0.1
10,12	0.6	2.2	1.5	1.5	0.1	1.0	1.5	0.1
16,18	0.8	5.0	2.0	2.5	0.3	1.5	2.0	0.2
20	0.9	6.2	2.0	3.5	0.4	1.5	3.0	0.3
24	1.1	8.9	3.0	3.5	0.5	1.5	3.0	0.3
30	1.4	10.4	3.0	3.5	0.6	2.0	3.5	0.4
36	1.7	15.0	3.5	4.5	0.9	2.0	4.0	0.5
42	1.9	20.4	4.5	5.0	1.5	2.5	5.0	0.8
48	2.2	26.6	4.5	6.0	2.0	2.5	6.0	1.1
54	2.5	33.7	6.0	6.0	3.0	3.0	6.0	1.4
60	2.7	41.6	6.0	7.0	3.8	3.0	7.0	1.8
66	3.0	50.3	6.5	8.0	5.1	3.5	8.0	2.7
72	3.3	59.9	7.5	8.0	6.3	4.0	8.0	3.3
78	3.6	70.2	8.0	9.0	8.1	4.0	9.0	3.9
84	3.8	81.5	8.5	10.0	10.3	4.5	10.0	5.3
90	4.1	93.5	9.5	10.0	12.2	5.0	10.0	6.3
96	4.4	106.4	10.0	11.0	15.0	5.0	11.0	7.4

I.D. (IN.)	Δ = 22.50°							
			EARTH			ROCK		
	G (FT.)	THRUST (TONS)	A (FT.)	B (FT.)	VOL. (C.Y.)	A (FT.)	B (FT.)	VOL. (C.Y.)
4,6,8	0.8	2.0	1.5	1.5	0.1	1.0	1.0	0.1
10,12	1.1	4.4	2.0	2.5	0.3	1.5	1.5	0.1
16,18	1.6	9.9	3.0	3.5	0.6	2.0	2.5	0.3
20	1.8	12.3	3.5	3.5	0.7	2.0	3.0	0.4
24	2.2	17.7	4.0	4.5	1.0	3.0	3.5	0.5
30	2.7	20.7	5.0	4.5	1.5	3.0	4.0	0.8
36	3.3	29.8	5.5	5.5	2.3	4.0	4.0	1.3
42	3.8	40.5	7.0	6.0	3.9	4.5	5.0	2.1
48	4.4	52.9	8.0	7.0	5.7	4.5	6.0	2.8
54	4.9	67.0	9.0	8.0	8.0	6.0	6.0	4.1
60	5.5	82.7	9.5	9.0	10.6	6.0	7.0	5.3
66	6.0	100.1	10.5	10.0	14.1	6.5	8.0	7.2
72	6.6	119.1	11.0	11.0	17.6	7.5	8.0	9.1
78	7.1	139.8	12.0	12.0	22.5	8.0	9.0	11.7
84	7.6	162.1	13.0	12.5	27.2	8.5	10.0	14.8
90	8.2	186.1	14.0	13.5	33.7	9.5	10.0	17.7
96	8.7	211.7	15.0	14.5	41.2	10.0	11.0	21.8

FRISCO
PROGRESS IN MOTION.

STANDARD CONSTRUCTION DETAIL

HORIZONTAL THRUST BLOCK AT PIPE BEND

SHEET 2 OF 3

SCALE: N.T.S.

REVISED: MAR 2012

W02

I.D. (IN.)	Δ = 30° G (FT.)	THRUST (TONS)	EARTH A (FT.)	EARTH B (FT.)	EARTH VOL. (C.Y.)	ROCK A (FT.)	ROCK B (FT.)	ROCK VOL. (C.Y.)	I.D. (IN.)	Δ = 45° G (FT.)	THRUST (TONS)	EARTH A (FT.)	EARTH B (FT.)	EARTH VOL. (C.Y.)	ROCK A (FT.)	ROCK B (FT.)	ROCK VOL. (C.Y.)
4,6,8	1.0	2.6	2.0	1.5	0.2	1.0	1.5	0.1	4,6,8	1.5	3.9	2.0	2.0	0.2	1.5	1.5	0.1
10,12	1.5	5.9	2.5	2.5	0.3	2.0	1.5	0.2	10,12	2.2	8.7	3.5	2.5	0.5	2.0	2.5	0.3
16,18	2.2	13.2	3.5	4.0	0.8	2.5	3.0	0.4	16,18	3.2	19.5	4.5	4.5	1.2	3.0	3.5	0.6
20	2.4	16.3	4.5	4.0	1.0	3.0	3.0	0.5	20	3.6	24.1	5.5	4.5	1.5	3.5	3.5	0.7
24	2.9	23.4	6.0	4.0	1.4	3.5	3.5	0.7	24	4.3	34.6	8.0	4.5	2.3	4.5	4.0	1.1
30	3.6	27.5	6.5	5.0	1.9	3.5	4.0	0.9	30	5.4	40.6	8.5	5.0	3.2	5.5	4.0	1.6
36	4.4	39.5	7.0	6.0	3.4	4.5	4.5	1.6	36	6.5	58.5	10.0	6.0	5.3	6.5	4.5	2.6
42	5.1	53.8	8.0	7.0	5.1	5.5	5.0	2.5	42	7.5	79.6	11.5	7.0	8.1	8.0	5.0	4.2
48	5.8	70.3	9.0	8.0	7.4	6.0	6.0	3.7	48	8.6	104.0	13.0	8.0	11.9	9.0	6.0	6.3
54	6.5	89.0	10.0	9.0	10.3	7.0	6.5	5.3	54	9.7	131.5	15.0	9.0	17.1	10.5	6.5	8.9
60	7.3	110.0	11.0	10.0	13.9	7.5	7.5	7.3	60	10.7	162.4	16.5	10.0	23.1	11.0	7.5	12.0
66	8.0	132.9	12.5	11.0	18.9	8.5	8.0	9.6	66	11.8	196.5	18.0	11.0	30.1	12.0	8.5	16.2
72	8.7	158.6	13.5	12.0	24.0	9.0	9.0	12.3	72	12.9	233.9	19.5	12.0	38.6	14.0	8.5	20.7
78	9.4	185.6	14.5	13.0	30.0	10.0	9.5	15.6	78	13.9	274.5	21.5	13.0	49.8	14.5	9.5	25.9
84	10.1	215.3	15.5	14.0	37.1	10.5	10.5	19.5	84	15.0	318.4	23.0	14.0	61.2	15.5	10.5	32.6
90	10.9	247.1	16.5	15.0	45.0	11.5	11.0	23.9	90	16.1	365.5	24.5	15.0	74.5	17.5	10.5	39.6
96	11.6	281.2	18.0	16.0	55.5	12.5	11.5	28.9	96	17.1	415.6	26.0	16.0	89.5	18.5	11.5	48.5

I.D. (IN.)	Δ = 67.50° G (FT.)	THRUST (TONS)	EARTH A (FT.)	EARTH B (FT.)	EARTH VOL. (C.Y.)	ROCK A (FT.)	ROCK B (FT.)	ROCK VOL. (C.Y.)	I.D. (IN.)	Δ = 90° G (FT.)	THRUST (TONS)	EARTH A (FT.)	EARTH B (FT.)	EARTH VOL. (C.Y.)	ROCK A (FT.)	ROCK B (FT.)	ROCK VOL. (C.Y.)
4,6,8	2.1	5.6	3.0	2.0	0.3	2.0	1.5	0.2	4,6,8	2.7	7.1	5.0	1.5	0.4	2.0	2.0	0.2
10,12	3.1	12.6	5.5	2.5	0.8	3.5	2.0	0.4	10,12	4.0	16.0	6.5	2.5	1.0	3.5	2.5	0.5
16,18	4.7	28.3	7.5	4.0	1.9	5.5	3.0	0.9	16,18	6.0	36.0	9.0	4.0	2.4	4.5	4.0	1.0
20	5.2	34.9	9.0	4.0	2.3	5.5	3.5	1.2	20	6.6	44.4	10.0	4.5	3.1	6.0	4.0	1.5
24	6.2	50.3	11.5	4.5	3.5	6.5	4.0	1.6	24	7.9	64.0	14.5	4.5	5.0	8.0	4.0	2.1
30	7.8	58.9	12.0	5.0	4.8	7.5	4.0	2.2	30	9.9	75.0	15.0	5.0	6.7	10.0	4.0	3.3
36	9.4	84.9	14.5	6.0	8.2	9.5	4.5	3.8	36	11.9	108.0	18.0	6.0	11.4	12.0	4.5	5.3
42	10.9	115.5	17.0	7.0	12.8	11.0	5.5	6.3	42	13.9	147.0	21.0	7.0	17.8	14.0	5.5	8.7
48	12.5	150.9	19.0	8.0	18.4	13.0	6.0	9.2	48	15.9	192.0	24.0	8.0	26.2	16.0	6.0	12.4
54	14.0	191.0	21.5	9.0	26.0	15.0	6.5	12.9	54	17.9	243.0	27.00	9.0	36.9	18.0	7.0	18.1
60	15.6	235.8	24.0	10.0	35.6	16.0	7.5	17.6	60	19.9	299.8	30.0	10.0	50.3	20.0	7.5	24.0
66	17.1	285.3	26.0	11.0	46.0	18.0	8.0	23.0	66	21.8	362.8	33.0	11.0	66.2	22.0	8.5	32.5
72	18.7	339.5	28.5	12.0	57.8	19.0	9.0	28.4	72	23.8	431.8	36.0	12.0	85.6	24.0	9.0	41.0
78	20.2	398.5	31.0	13.0	75.7	21.0	9.5	37.4	78	25.7	506.7	39.0	13.0	108.2	26.0	10.0	53.2
84	21.8	462.1	33.5	14.0	94.7	22.0	10.5	46.5	84	27.7	587.7	42.0	14.0	134.4	28.0	10.5	64.8
90	23.3	530.5	35.5	15.0	114.4	24.5	11.0	58.2	90	29.0	674.6	45.0	15.0	164.9	30.0	11.5	81.2
96	24.9	603.6	38.0	16.0	138.9	25.5	12.0	70.0	96	31.6	767.5	48.0	16.0	199.0	32.0	12.0	95.1

FRISCO
PROGRESS IN MOTION.

STANDARD CONSTRUCTION DETAIL

HORIZONTAL THRUST BLOCK AT PIPE BEND

SHEET 3 OF 3

SCALE: N.T.S.

REVISED: MAR 2012

W03

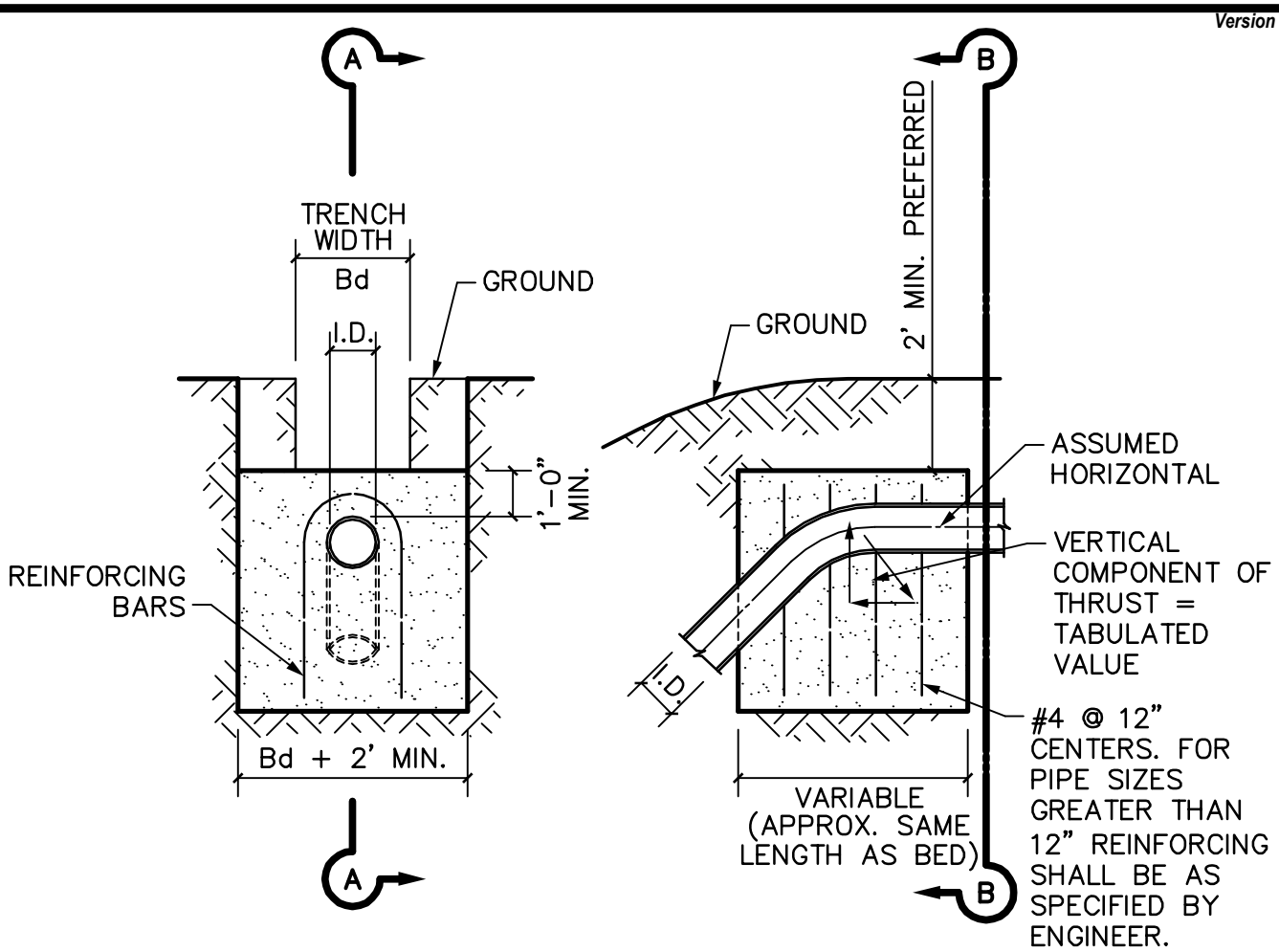

ELEVATION B-B

SECTION A-A

Δ	11.25°		22.50°		30°		45°		67.50°		90°		Δ
I.D. (IN.)	THRUST (TONS)	VOL. (C.Y.)	THRUST (TONS)	VOL. (C.Y.)	THRUST (TONS)	VOL. (C.Y.)	THRUST (TONS)	VOL. (C.Y.)	THRUST (TONS)	VOL. (C.Y.)	THRUST (TONS)	VOL. (C.Y.)	I.D. (IN.)
4,6,8	1.0	0.5	2.0	1.0	2.5	1.3	3.6	1.8	4.6	2.3	5.0	2.5	4,6,8
10,12	2.2	1.1	4.3	2.2	5.7	2.8	8.0	4.0	10.5	5.2	11.3	5.7	10,12
16,18	5.0	2.5	9.7	4.9	12.7	6.4	18.0	9.0	23.5	11.8	25.5	12.7	16,18
20	6.1	3.1	12.0	6.0	15.7	7.9	22.2	11.1	29.2	14.5	31.4	15.7	20
24	8.2	4.4	17.3	8.7	22.6	11.3	32.0	16.0	41.8	20.9	45.2	22.6	24
30	10.5	5.2	20.3	10.1	26.5	13.3	37.5	18.8	49.0	24.5	53.1	26.5	30
36	14.9	7.5	29.2	14.6	38.2	19.1	54.0	27.0	70.5	35.3	76.4	38.2	36
42	20.3	10.1	39.8	19.9	52.0	26.0	73.5	36.7	96.0	48.0	104.0	52.0	42
48	26.5	13.2	51.9	26.0	67.9	33.9	96.0	48.0	126.0	62.7	136.0	67.9	48
54	33.5	16.8	65.7	32.9	85.9	42.9	122.0	60.7	159.0	79.4	172.0	85.9	54
60	41.4	20.7	81.2	40.6	106.0	53.0	150.0	75.0	196.0	98.0	212.0	106.0	60
66	50.1	25.0	98.2	49.1	128.0	64.2	182.0	90.7	237.0	119.0	257.0	128.0	66
72	59.6	29.8	117.0	58.4	153.0	76.3	216.0	108.0	282.0	141.0	305.0	153.0	72
78	69.9	35.0	137.0	68.6	179.0	90.0	254.0	127.0	331.0	166.0	358.0	179.0	78
84	81.1	40.5	159.0	79.5	208.0	104.0	294.0	147.0	384.0	192.0	416.0	208.0	84
90	93.1	46.5	183.0	91.3	239.0	119.0	337.0	169.0	441.0	221.0	477.0	239.0	90
96	106.0	53.0	208.0	104.0	272.0	136.0	384.0	192.0	502.0	251.0	543.0	272.0	96

NOTE:

1. REFER TO STANDARD DETAIL W06 FOR GENERAL NOTES.

FRISCO
PROGRESS IN MOTION.

STANDARD CONSTRUCTION DETAIL

VERTICAL THRUST BLOCK AT PIPE BEND

SCALE: 1/4"=1'-0"

REVISED: MAR 2012

W05

GENERAL NOTES FOR ALL THRUST BLOCKS:

1. CONCRETE FOR BLOCKING SHALL BE CLASS B AND SULFATE RESISTANT. RE: TECHNICAL SPECIFICATION 321313.

2. ALL CALCULATIONS ARE BASED ON INTERNAL PRESSURE OF 200 PSI FOR DUCTILE IRON, P.V.C.

3. VOLUMES OF THRUST BLOCKS ARE NET VOLUMES OF CONCRETE TO BE FURNISHED. THE CORRESPONDING WEIGHT OF THE CONCRETE (CLASS B) IS EQUAL TO OR GREATER THAN THE VERTICAL COMPONENT OF THE THRUST ON THE VERTICAL BEND.

4. WALL THICKNESS (T) ASSUMED HERE FOR ESTIMATING PURPOSES ONLY.

5. POUR CONCRETE FOR BLOCK AGAINST UNDISTURBED EARTH.

6. DIMENSIONS MAY BE VARIED AS REQUIRED BY FIELD CONDITIONS WHERE AND AS DIRECTED BY THE ENGINEER. THE VOLUME OF CONCRETE BLOCKING SHALL BE LESS THAN SHOWN HERE.

7. THE SOIL BEARING PRESSURES ARE BASED ON 1000 LBS./S.F. IN SOIL AND 2000 LBS./S.F. IN ROCK.

8. USE POLYETHYLENE WRAP OR EQUAL BETWEEN CONCRETE AND BEND, TEE, OR PLUG TO PREVENT THE CONCRETE FROM STICKING TO IT.

9. FOR STANDARD FITTINGS, CONCRETE SHALL NOT EXTEND BEYOND JOINTS.

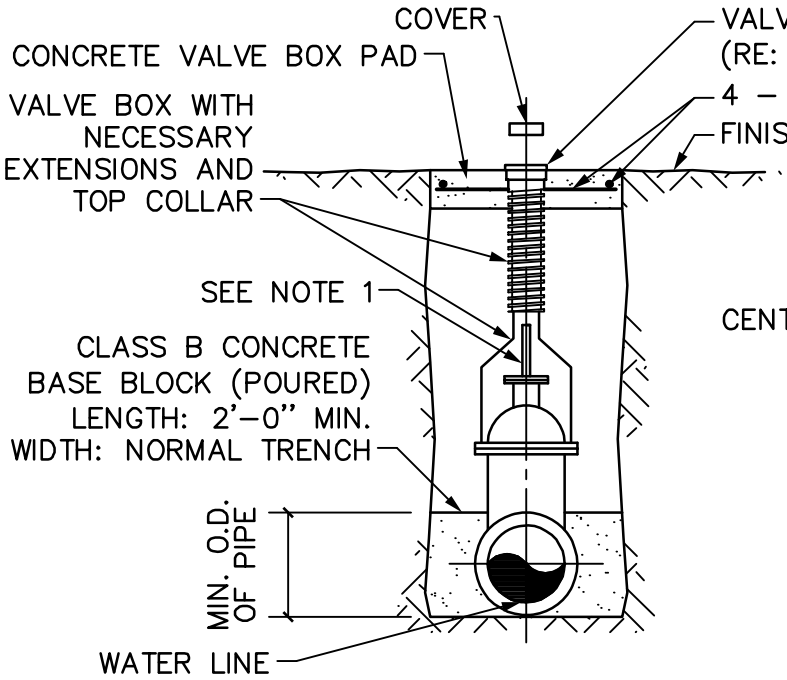

VALVE SETTING & BOX

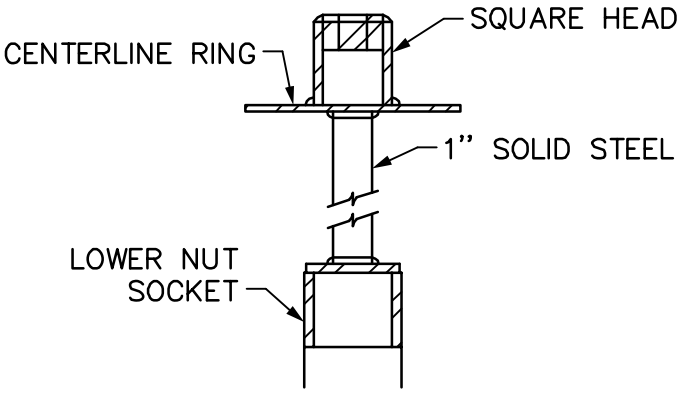

VALVE EXTENSION

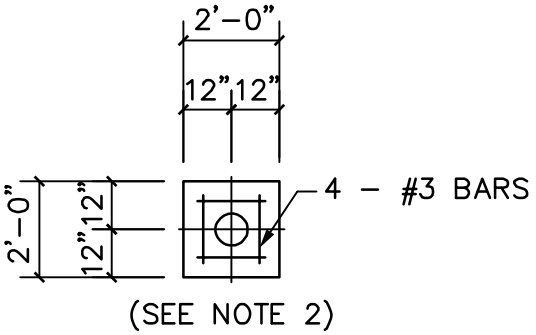

VALVE BOX PAD PLAN

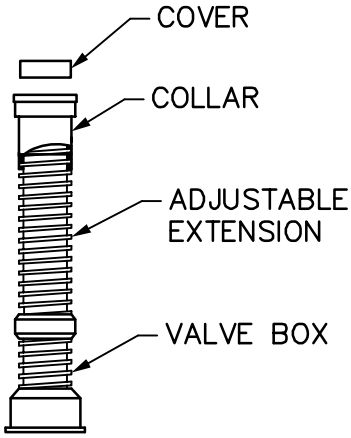

VALVE BOX WITH EXTENSION

NOTES:

1. A VALVE EXTENSION STEM SHALL BE REQUIRED FOR ANY VALVE WHOSE OPERATING NUT IS LOCATED IN EXCESS OF 4' BELOW THE TOP OF VALVE BOX. THIS EXTENSION SHALL BE OF SUFFICIENT LENGTH TO INSURE THAT ITS TOP IS WITHIN 2' OF THE VALVE BOX COVER.

2. CONCRETE PAD 24" SQUARE SHALL BE POURED AROUND ALL VALVE BOXES NOT PLACED WITHIN CONCRETE PAVEMENT. CLASS A CONCRETE, 6" THICK.

3. REFER TO TECHNICAL SPECIFICATION 331217.

FRISCO PROGRESS IN MOTION.	STANDARD CONSTRUCTION DETAIL **GATE VALVE**	SCALE: 1/4"=1'-0" REVISED: MAR 2012 W07

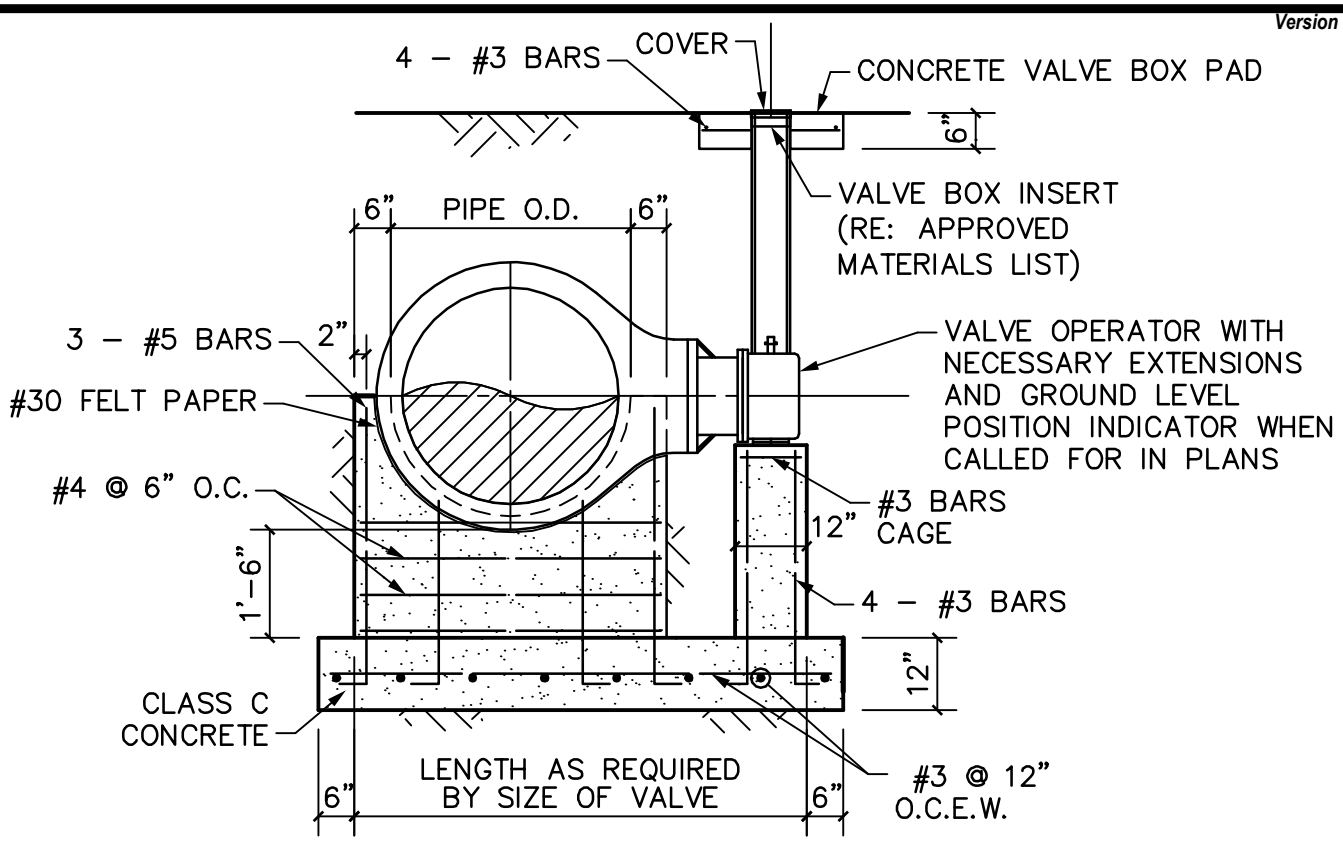

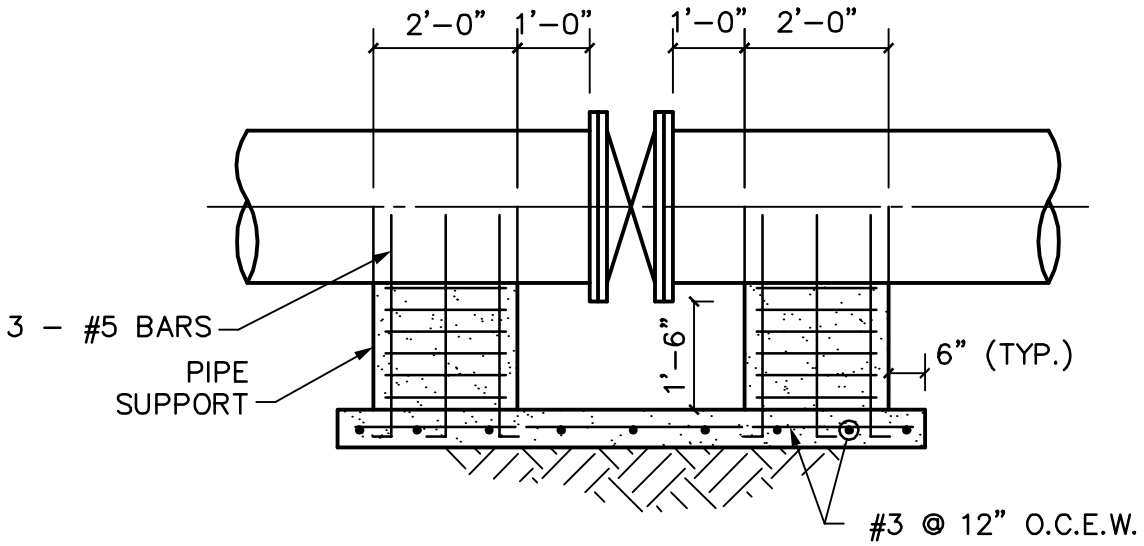

NOTES:

1. ALL OPERATING NUTS SHALL BE EXTENDED TO WITHIN 6" OF FINAL GRADE.
2. 6" BYPASS MAY BE REQUIRED BY CITY ON SPECIFIC PROJECTS.
3. REFER TO TECHNICAL SPECIFICATION 331218 BUTTERFLY VALVES.

FRISCO PROGRESS IN MOTION.	STANDARD CONSTRUCTION DETAIL **BUTTERFLY VALVE**	SCALE: 3/8"=1'–0" REVISED: MAR 2012 W08

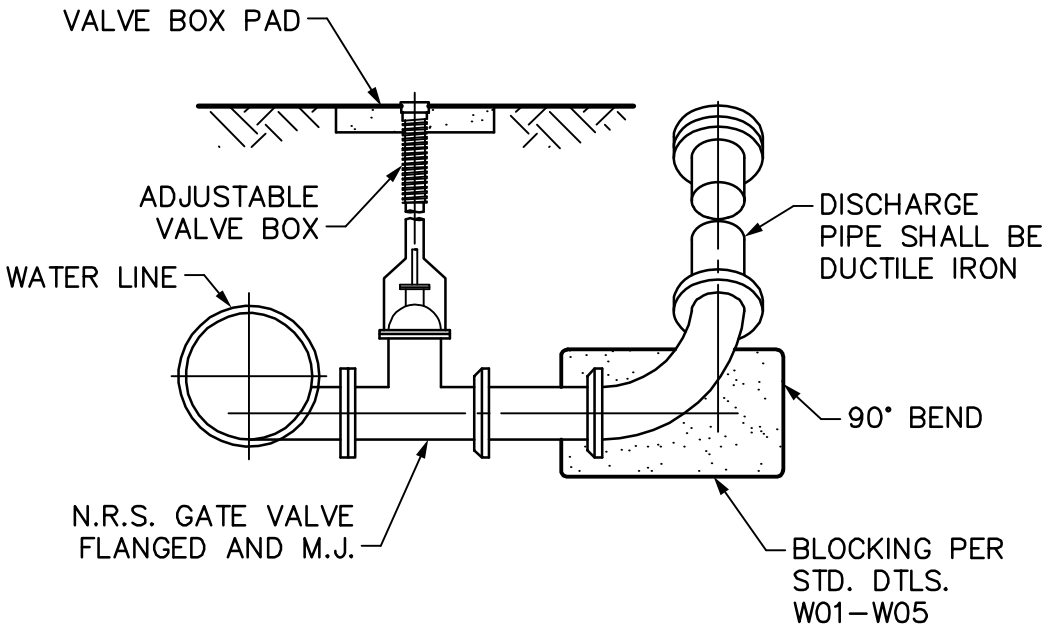

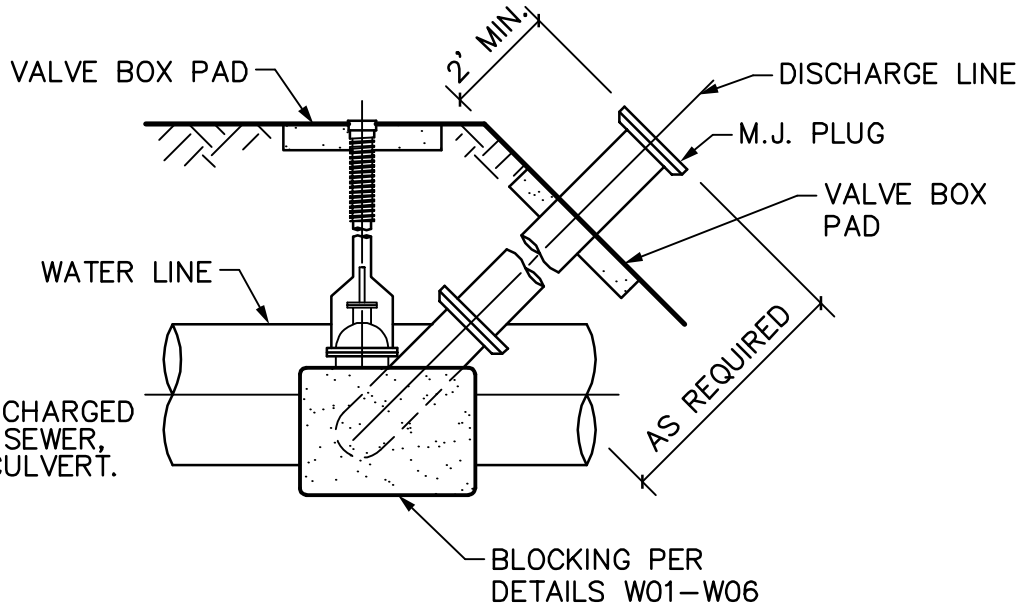

NOTE:

1. MUST BE DISCHARGED INTO STORM SEWER, BRIDGE OR CULVERT.

FRISCO PROGRESS IN MOTION.	STANDARD CONSTRUCTION DETAIL **BLOW OFF VALVE**	SCALE: 1/4"=1'–0" REVISED: MAR 2012 W10

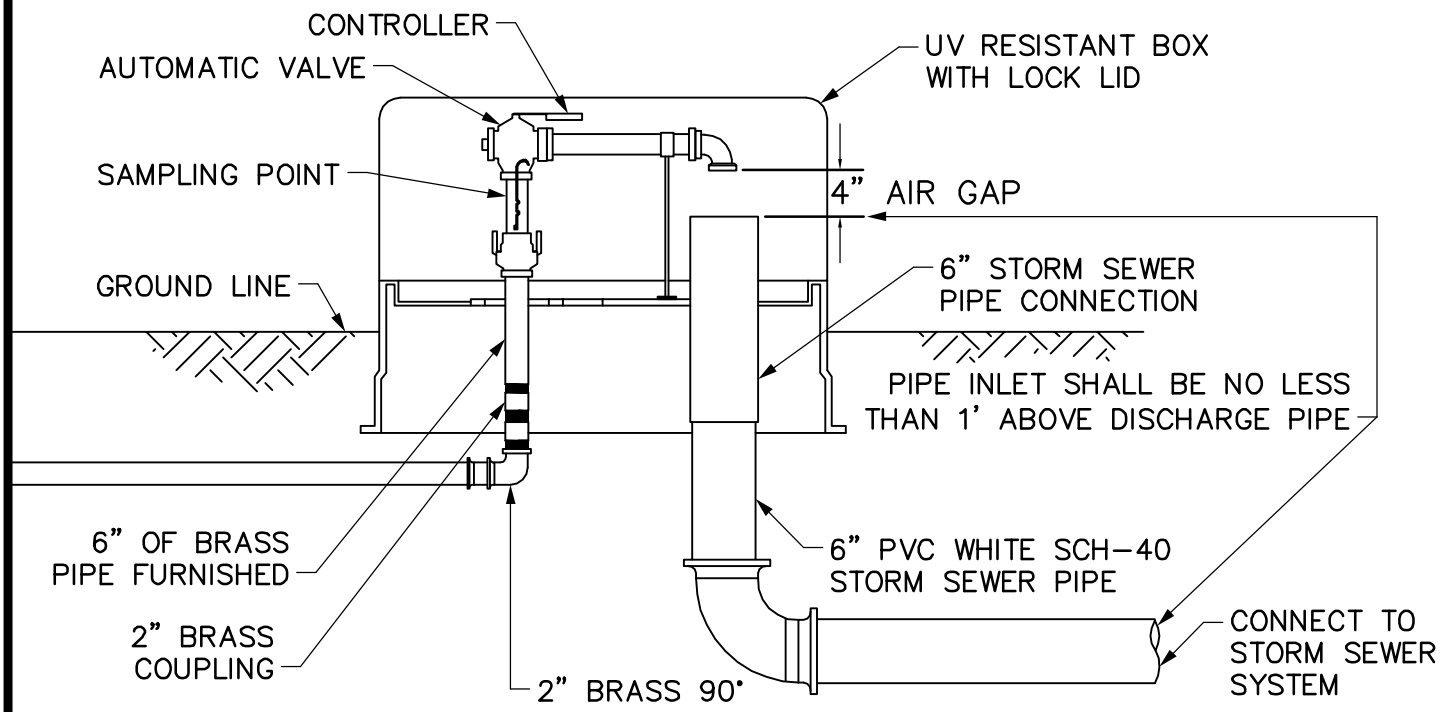

AUTOMATIC FLUSHING VALVE SHALL HAVE A 2" BRASS FIP INLET LEADING VERTICALLY INTO A 2" AUTOMATIC SOLENOID VALVE. AUTOMATIC SOLENOID VALVE SHALL HAVE AN INTERNAL, SELF-CLEANING DEBRIS SCREEN AND HAVE A 220 PSI RATING. EACH UNIT SHALL BE FURNISHED WITH A STAND-ALONE CONTROLLER. VALVE CONTROLLER WILL NOT REQUIRE A SECOND HAND-HELD DEVICE FOR PROGRAMMING. CONTROLLER MUST HAVE A MINIMUM OF 9 POSSIBLE FLUSHING CYCLES PER DAY. SHALL BE SUBMERSIBLE TO 12 FEET. OPERATE WITH A 9 VOLT BATTERY AND HAVE RESIN-SEALED ELECTRICAL COMPONENTS. SOLENOID SHALL HAVE NO LOOSE PARTS WHEN REMOVED FROM VALVE. EACH UNIT SHALL HAVE A DOUBLE VALVE, ALL BRASS SAMPLING POINT. REMOVAL OF 2" SOLENOID VALVE SHALL BE POSSIBLE VIA A QUICK DISCONNECT BELOW THE VALVE. ALL ABOVE-GROUND COMPONENTS SHALL BE CONTAINED WITHIN A UV-RESISTANT LOCKING COVER AS MANUFACTURED BY KUPFERLE FOUNDRY COMPANY.

NOTES:

1. TUBING SHALL BE EMBEDDED IN SAND FROM CORPORATION STOP TO CURB STOP.
2. THE AUTOMATIC FLUSHING DEVICE SYSTEM SHALL BE INSTALLED PARALLEL TO THE CURB LINE.
3. UNIT SHALL NOT BE INSTALLED FRONT OF A RESIDENTIAL LOT.
4. IRRIGATION BOX SHALL BE NO LESS THAN 17" WIDE X 30" LONG X 18' DEEP X 2 BOLT DOWN. BOLTS MODEL #J-19-R.
5. CONTRACTOR TO OBTAIN PERMIT AT CITY OF FRISCO PERMIT OFFICE AND REQUEST 2" TURBINE METER SET AT PUBLIC WORKS DEPARTMENT.
6. REFER TO APPROVED MATERIALS LIST.

FRISCO PROGRESS IN MOTION.	STANDARD CONSTRUCTION DETAIL **FLUSH POINT**	SCALE: NTS REVISED: SEPT 2011 W11

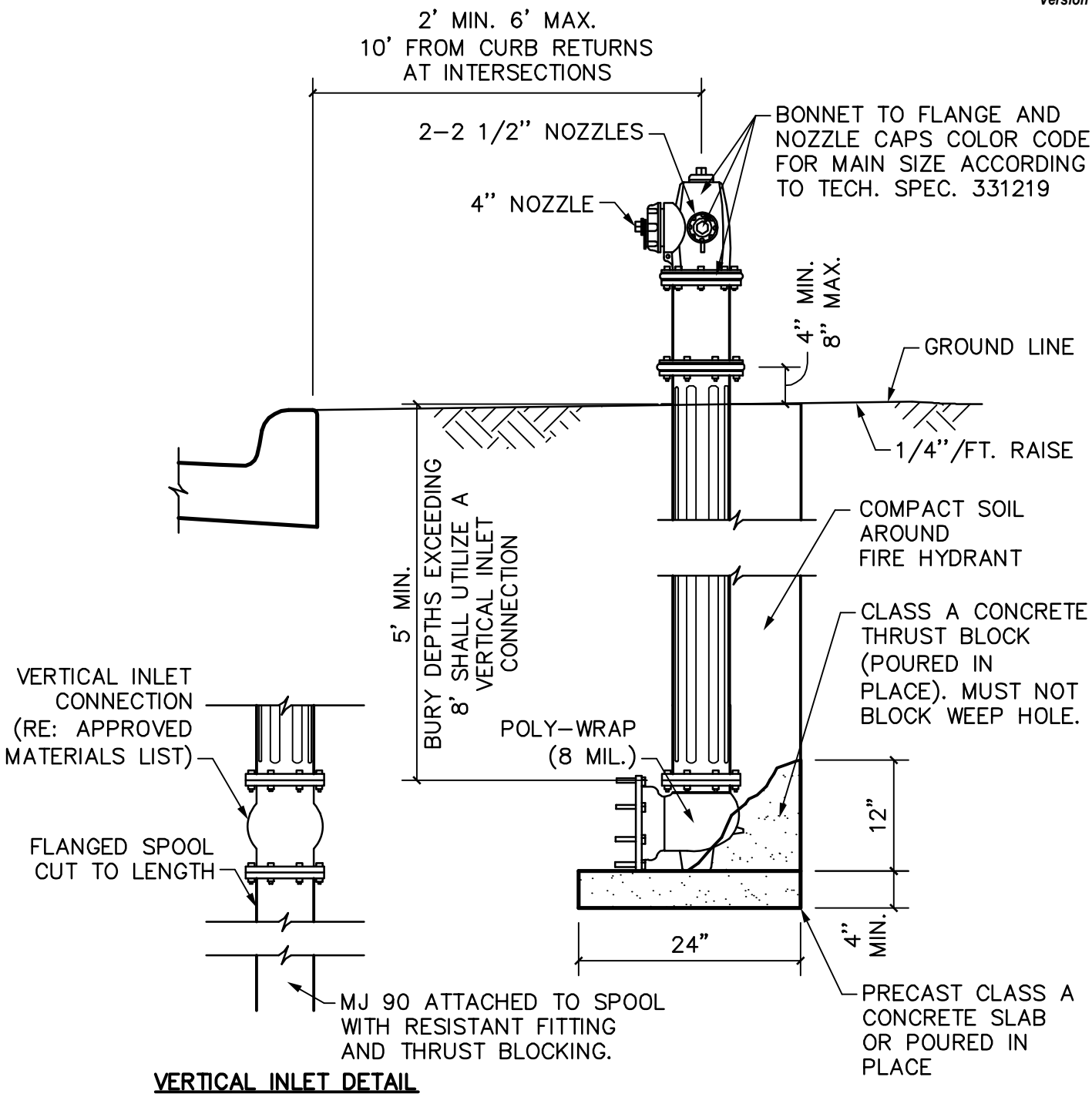

VERTICAL INLET DETAIL

NOTES:

1. A BLUE STEMSONITE (OR APPROVED OTHER) MODEL 88–SSA FIRE HYDRANT MARKER WILL BE INSTALLED OPPOSITE FIRE HYDRANTS JUST OFF CENTER TO THE SIDE OF THE STREET ADJACENT TO THE HYDRANT.

2. CONTRACTOR SHALL UTILIZE VERTICAL INLET CONNECTION WHEN BURY DEPTHS EXCEED EIGHT (8) FEET.

FRISCO PROGRESS IN MOTION.	STANDARD CONSTRUCTION DETAIL **FIRE HYDRANT**	SCALE: 3/4"=1'–0" REVISED: MAR 2012 W12

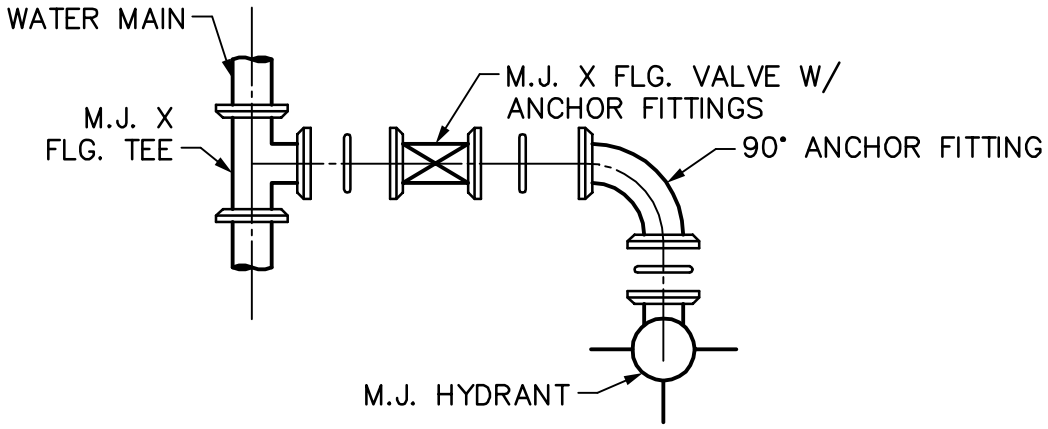

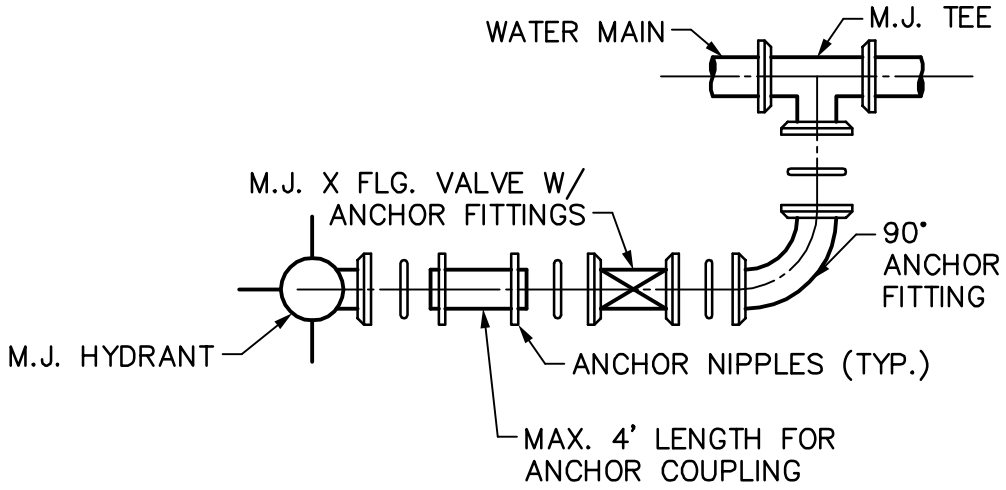

NOTES:

1. ALL FIRE HYDRANTS MUST BE ANCHORED TO MAIN BY USE OF ANCHOR FITTINGS.
2. ANCHOR TEES ALLOWED.
3. REFER TO TECHNICAL SPECIFICATION 331219 FIRE HYDRANTS.

FRISCO PROGRESS IN MOTION.	STANDARD CONSTRUCTION DETAILS **FIRE HYDRANT INSTALLATION**	SCALE: 1/8"=1'-0" REVISED: MAR 2012 W13

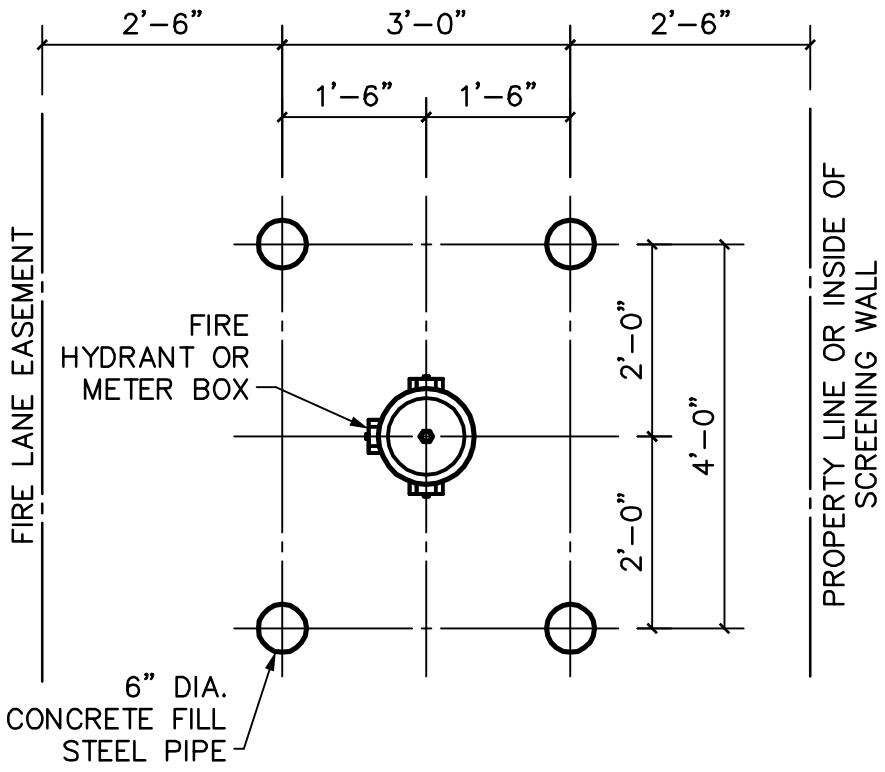

NOTES:

1. FOR USE WHERE CURBS ARE NOT POSSIBLE OR AS SPECIFIED BY THE CITY.

2. FIRE HYDRANTS SHALL BE 35' CLEAR OF ALL BUILDINGS.

3. GUARD POSTS SHALL BE 6 LINEAR FEET OF 6" DIAMETER STEEL PIPE (3' ABOVE & BELOW GROUND LEVEL). POST SHALL BE ENCASED IN 16" DIAMETER CONCRETE PIER TO A DEPTH OF 12" BELOW POST BOTTOM. REINFORCED CONCRETE PIER WITH 2 – #6 BARS (12" LONG) THROUGH POST INTO PIER. POST ABOVE GROUND LEVEL SHALL BE PAINTED SAFETY YELLOW.

FRISCO PROGRESS IN MOTION.	STANDARD CONSTRUCTION DETAIL **PIPE BOLLARD**	SCALE: 1/2"=1'–0" REVISED: MAR 2012 W14

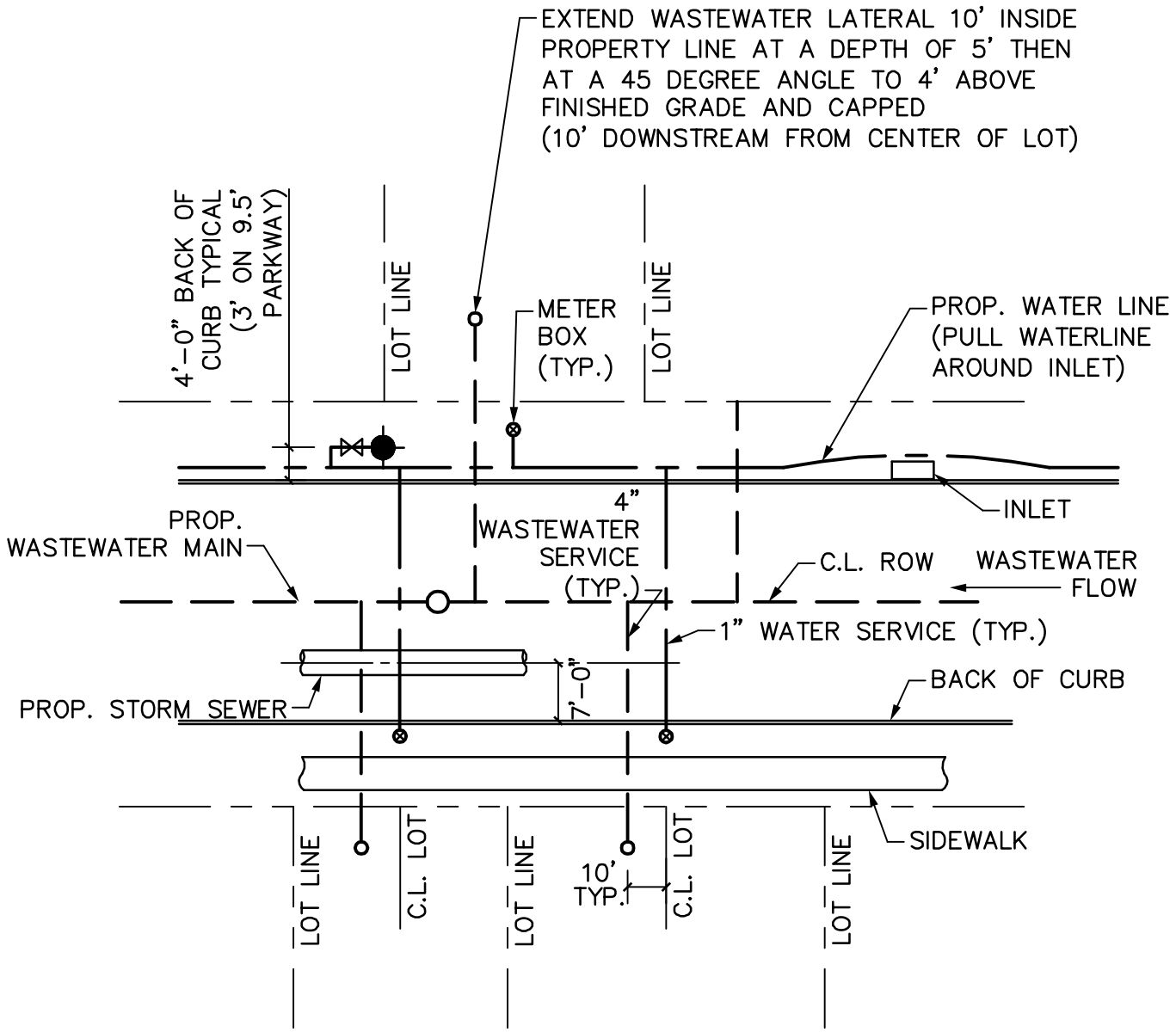

FRISCO
PROGRESS IN MOTION.

STANDARD CONSTRUCTION DETAIL

RESIDENTIAL SERVICE LOCATIONS

SCALE: 1"=20'

REVISED: MAR 2012

W15

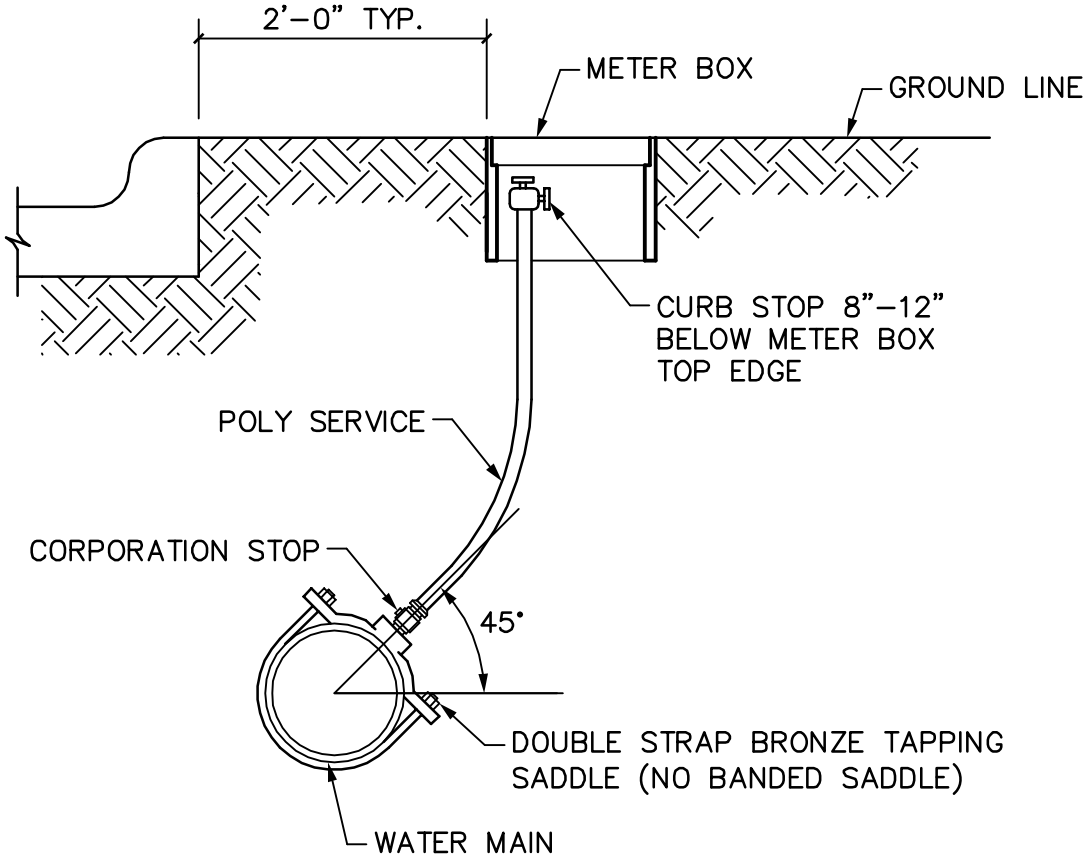

NOTES:

1. WATER SERVICES SHALL NOT BE CONNECTED TO FIRE HYDRANT LINES OR TO FIRE SERVICE MAINS.
2. METER BOX SHALL BE LOCATED OUT OF ALL FLATWORK, SIDEWALKS AND APPROACHES.
3. REFER TO TECHNICAL SPECIFICATION 331213 WATER SERVICE CONNECTIONS.

FRISCO PROGRESS IN MOTION.	STANDARD CONSTRUCTION DETAIL **TYPICAL SERVICE CONNECTION**	SCALE: 3/4"=1'-0" REVISED: MAR 2012 W16

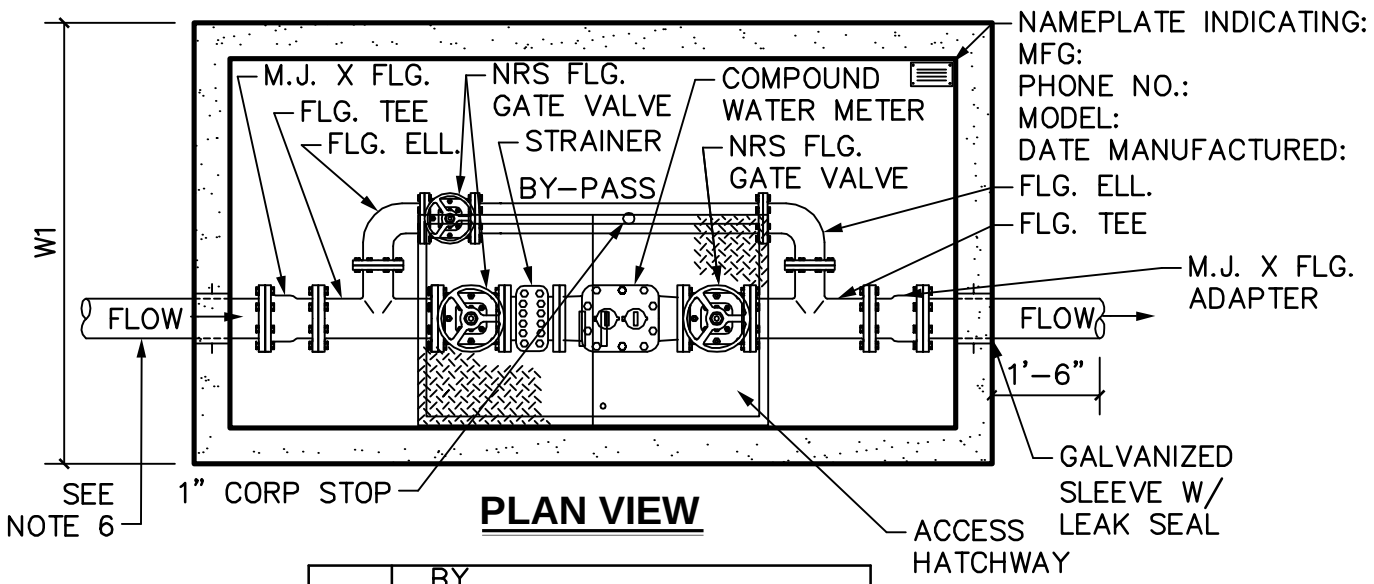

PLAN VIEW

SIZE	BY PASS	L1	W1	H1
3"	2"	8'-8"	4'-8"	4'-6"
4"	2"	8'-8"	4'-8"	4'-6"
6"	4"	11'-0"	6'-0"	4'-6"

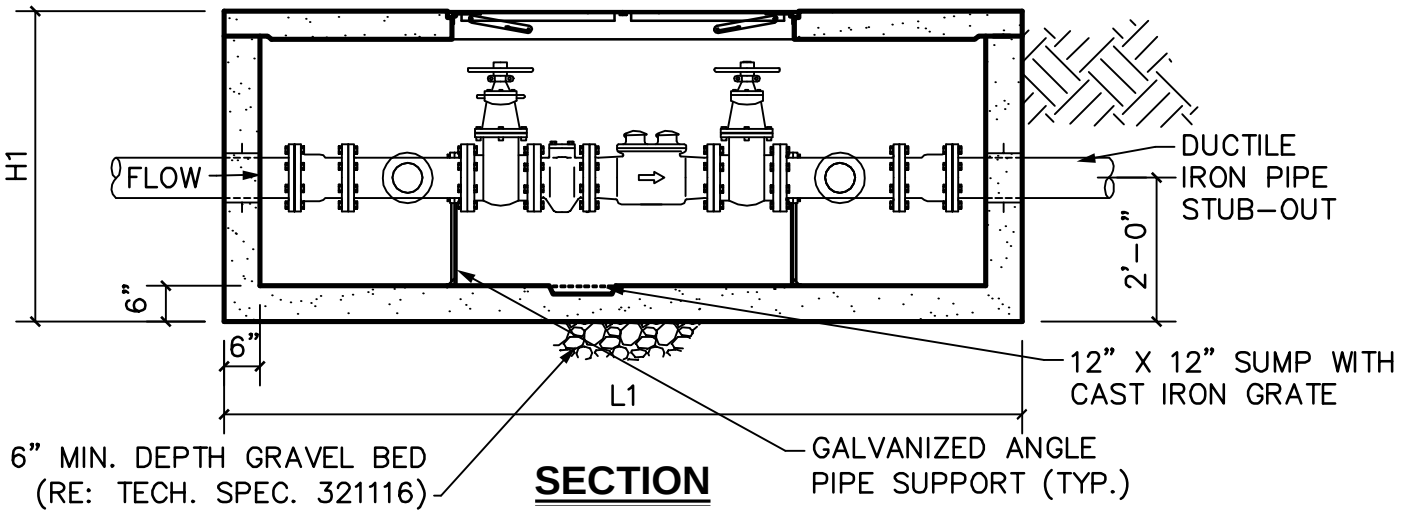

SECTION

NOTES:

1. UNIT IS OF MONOLITHIC CONSTRUCTION AT FLOOR AND FIRST STAGE OF WALL WITH SECTIONAL RISER TO REQUIRED DEPTH.
2. REINFORCEMENT: GRADE 60 REINFORCED. STEEL BAR CONFORMING TO ASTM A615 ON REQUIRED CENTERS OR EQUAL.
3. HATCHWAY: 3' X 5' GALVANIZED STEEL DOUBLE LEAF SPRING ASSISTED HATCHWAY – W/ SLAM LOCK (TRAFFIC RATED IF WITHIN PAVING).
4. PRECAST VAULT SHALL BE FROM APPROVED MATERIAL LIST.
5. PIPE FITTINGS SHALL BE DUCTILE IRON.
6. MINIMUM 6" WATER LINE OFF THE WATER MAIN WITH MINIMUM 6" GATE VALVE PRIOR TO REDUCING IN SIZE.

FRISCO PROGRESS IN MOTION.	STANDARD CONSTRUCTION DETAIL **DOMESTIC WATER METER VAULT**	SCALE: 3/8"=1'-0" REVISED: MAR 2012 W17

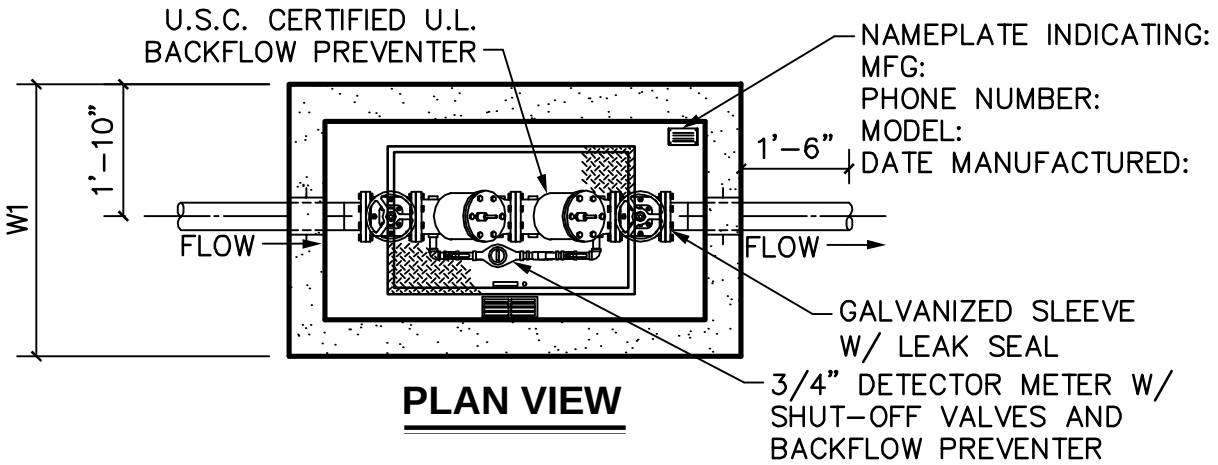

PLAN VIEW

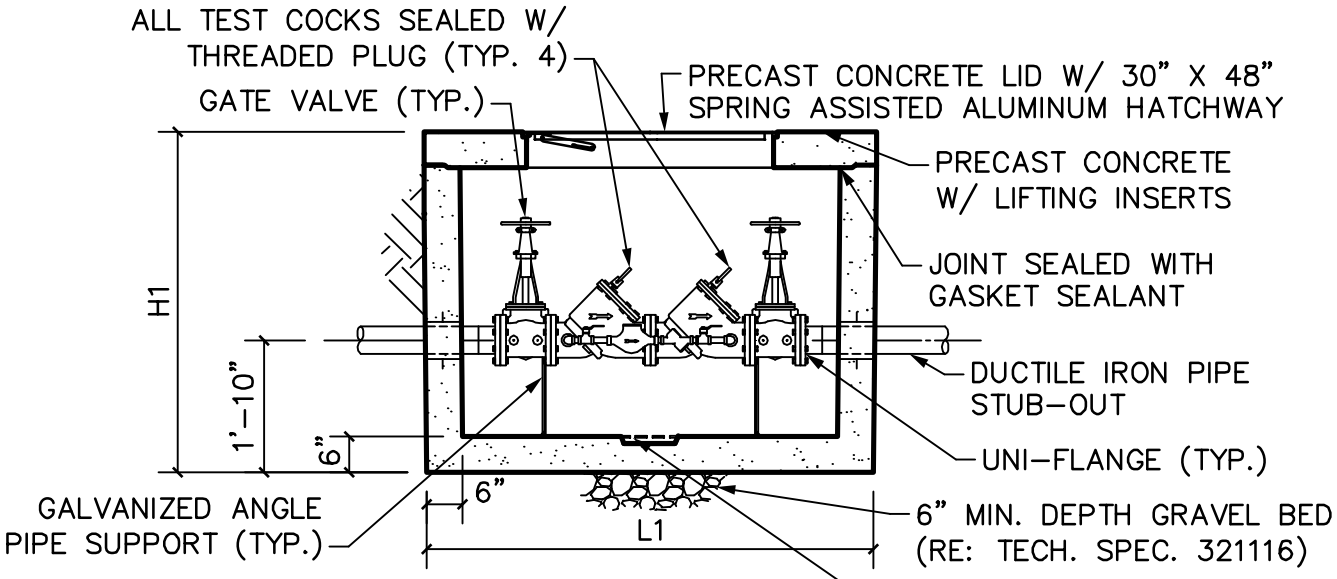

SECTION

SIZE	L1	W1	H1
4"	7'–10"	4'–4"	6'–0"
6"	7'–10"	4'–4"	6'–0"
8"	8'–8"	5'–0"	6'–0"
10"	9'–2"	5'–8"	6'–6"

NOTES:

1. UNIT IS OF MONOLITHIC CONSTRUCTION AT FLOOR AND FIRST STAGE OF WALL WITH SECTIONAL RISER TO REQUIRED DEPTH.
2. REINFORCEMENT: GRADE 60 REINFORCED. STEEL BAR CONFORMING TO ASTM A615 ON REQUIRED CENTERS OR EQUAL.
3. HATCHWAY: 1/4" ALUMINUM DIAMOND PLATE COVER WITH EXTRUDED ALUMINUM FRAME. HATCH TO BE FURNISHED WITH 316 STAINLESS STEEL SNAP LOCK & BRASS FINISH HINGES.
4. PRECAST VAULT SHALL BE FROM APPROVED MATERIALS LIST.
5. PIPE AND FITTINGS SHALL BE DUCTILE IRON.

FRISCO
PROGRESS IN MOTION.

STANDARD CONSTRUCTION DETAIL

DOUBLE DETECTOR CHECK FIRE VAULT

SCALE: 3/8"=1'–0"
REVISED: MAR 2012
W18

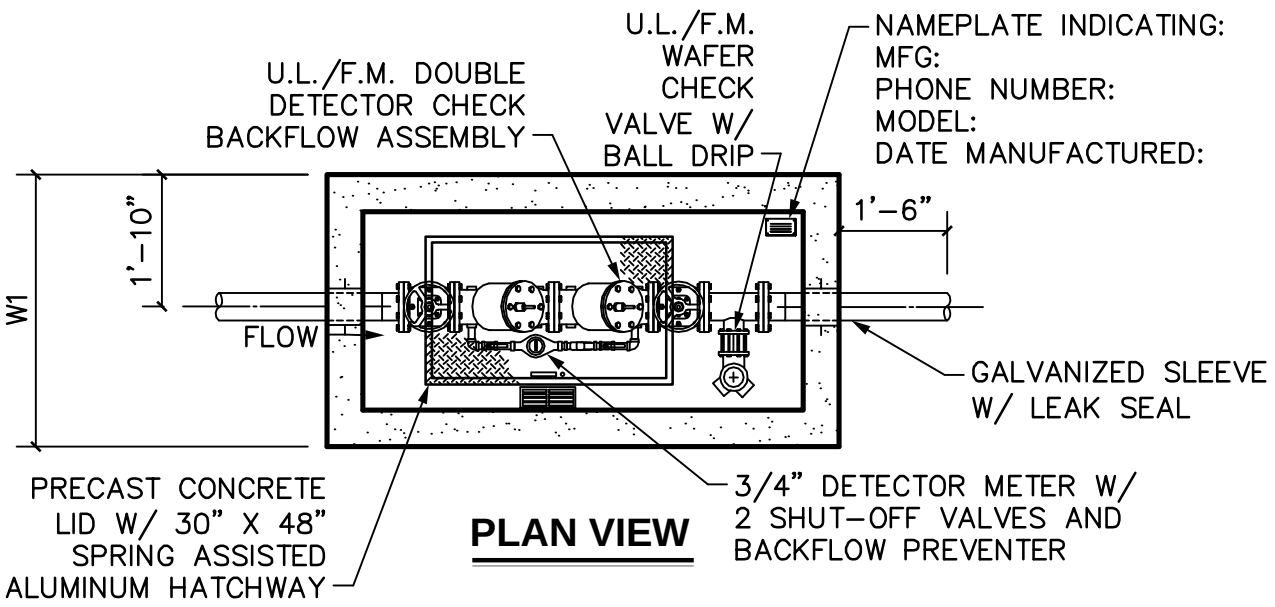

PLAN VIEW

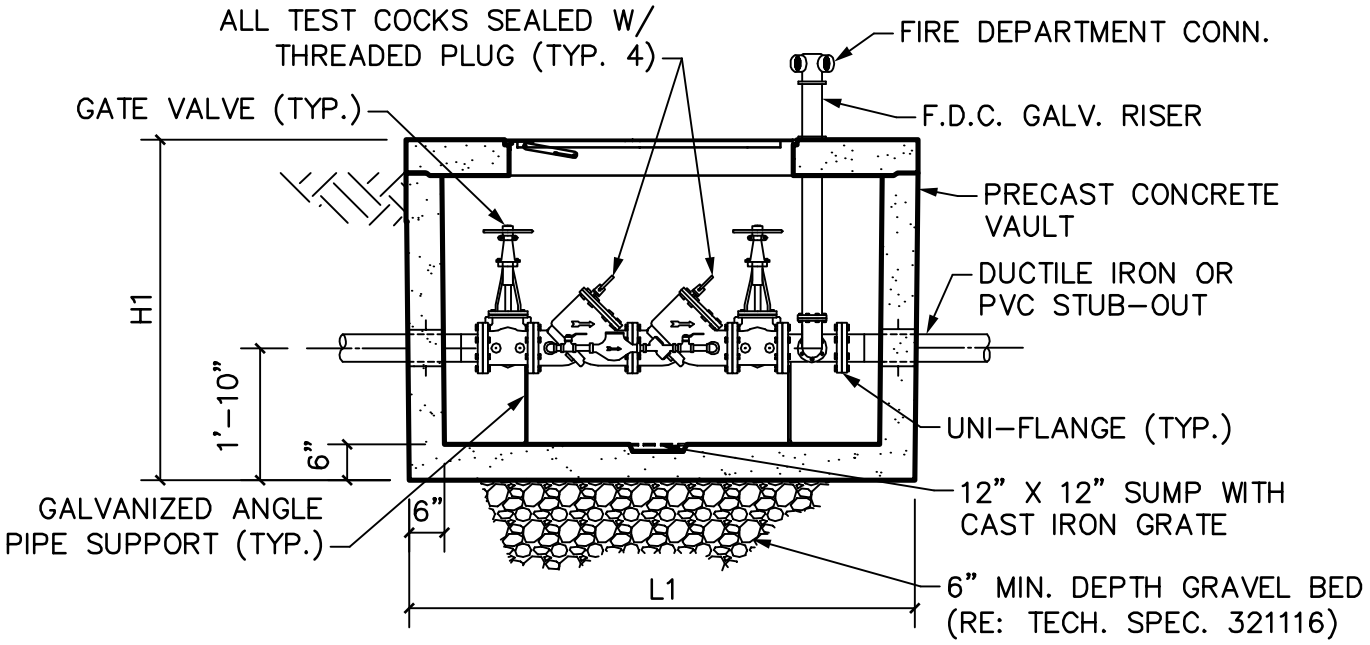

SECTION

SIZE	L1	W1	H1
4"	7'-10"	4'-4"	6'-0"
6"	8'-8"	5'-0"	6'-0"
8"	9'-0"	6'-0"	6'-6"
10"	11'-0"	6'-0"	7'-0"

NOTE:

1. PIPE AND FITTINGS SHALL BE DUCTILE IRON.

FRISCO PROGRESS IN MOTION.

STANDARD CONSTRUCTION DETAIL

DOUBLE DETECTOR CHECK FIRE VAULT AND F.D.C.

SCALE: 3/8"=1'-0"

REVISED: MAR 2012

W19

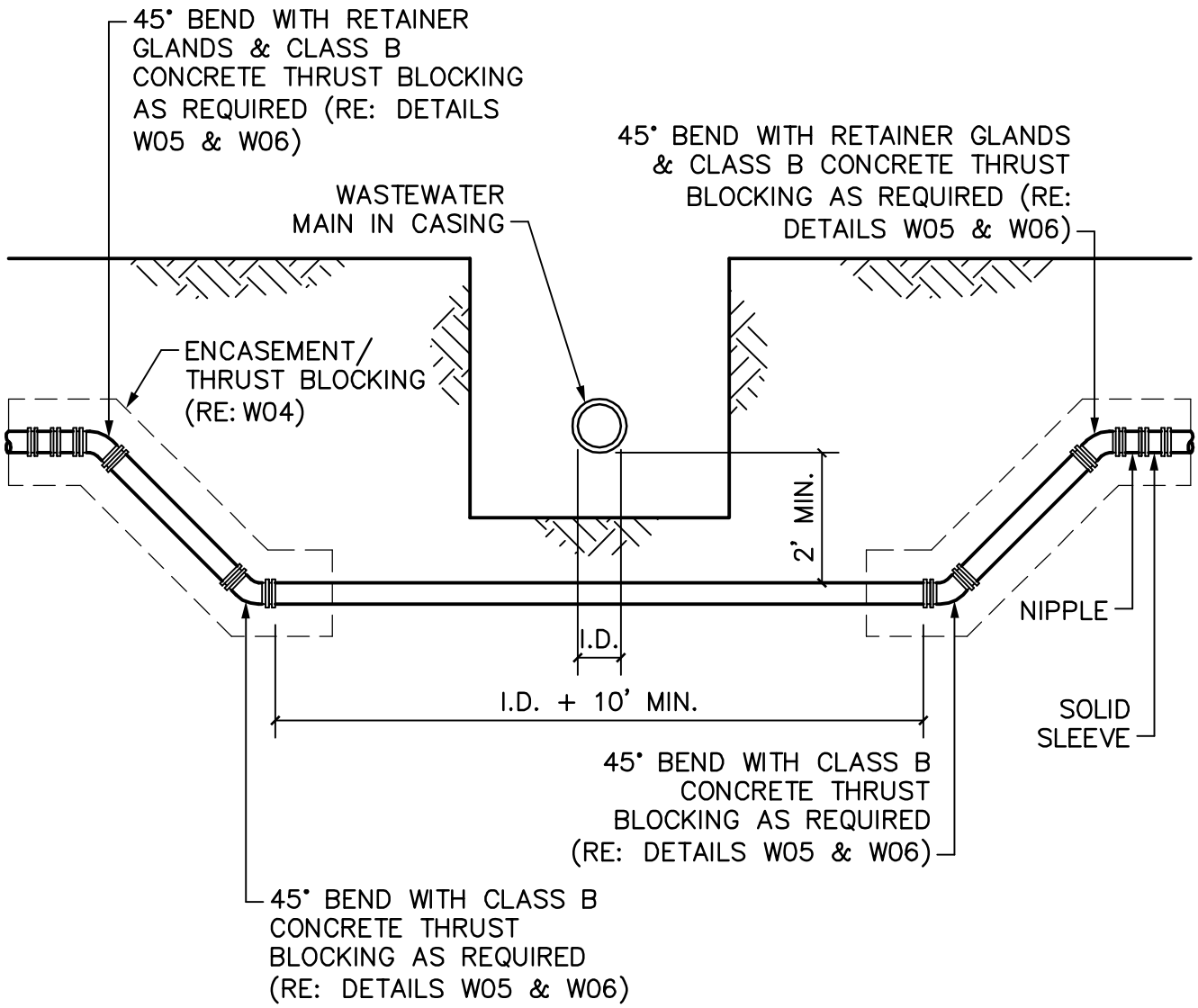

FRISCO
PROGRESS IN MOTION.

STANDARD CONSTRUCTION DETAIL

WATER MAIN LOWERING

BELOW WASTEWATER MAIN

SCALE: 3/8"=1'-0"

REVISED: MAR 2012

W20

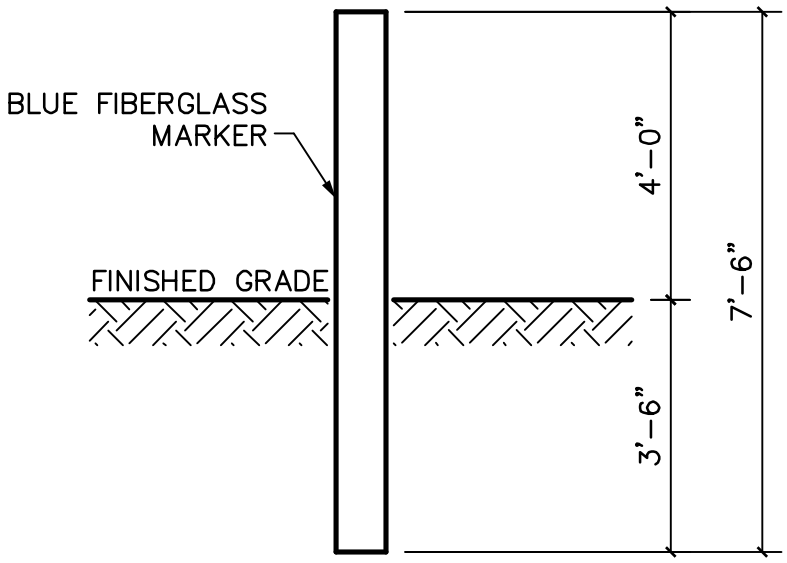

ELEVATION

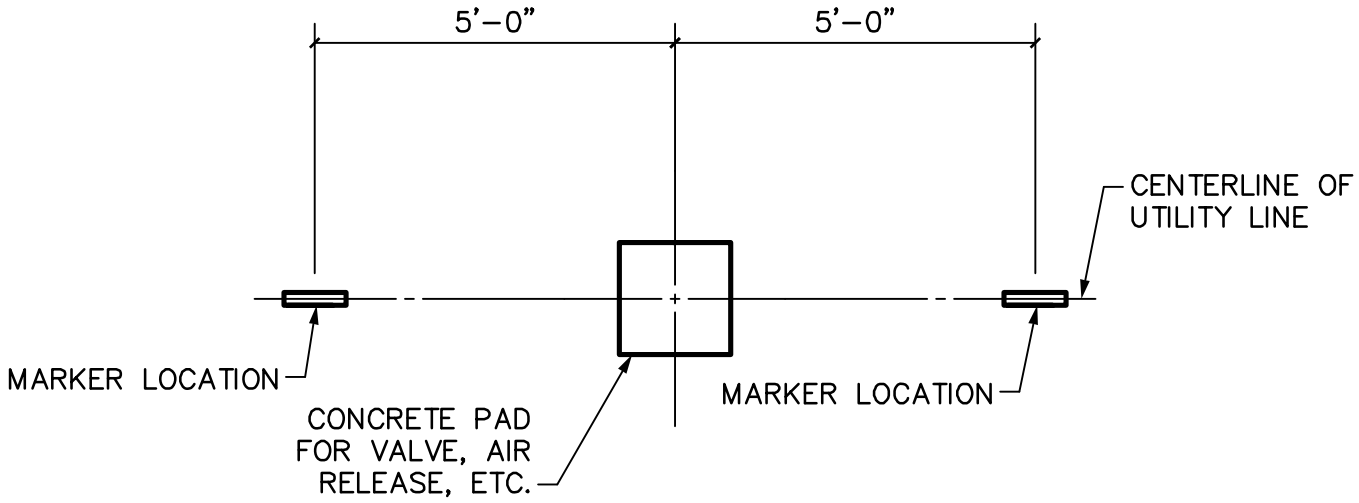

FIELD INSTALLATION DETAIL

NOTE:

1. ALL OFFSITE CITY OF FRISCO MAINS WITH VALVES, AIR RELEASE VALVES, ETC. SHALL BE MARKED AS DETAILED ON THIS SHEET.

FRISCO PROGRESS IN MOTION.	STANDARD CONSTRUCTION DETAIL **OFFSITE WATER MAIN MARKER**	SCALE: 3/8"=1'-0" REVISED: MAR 2012 W21

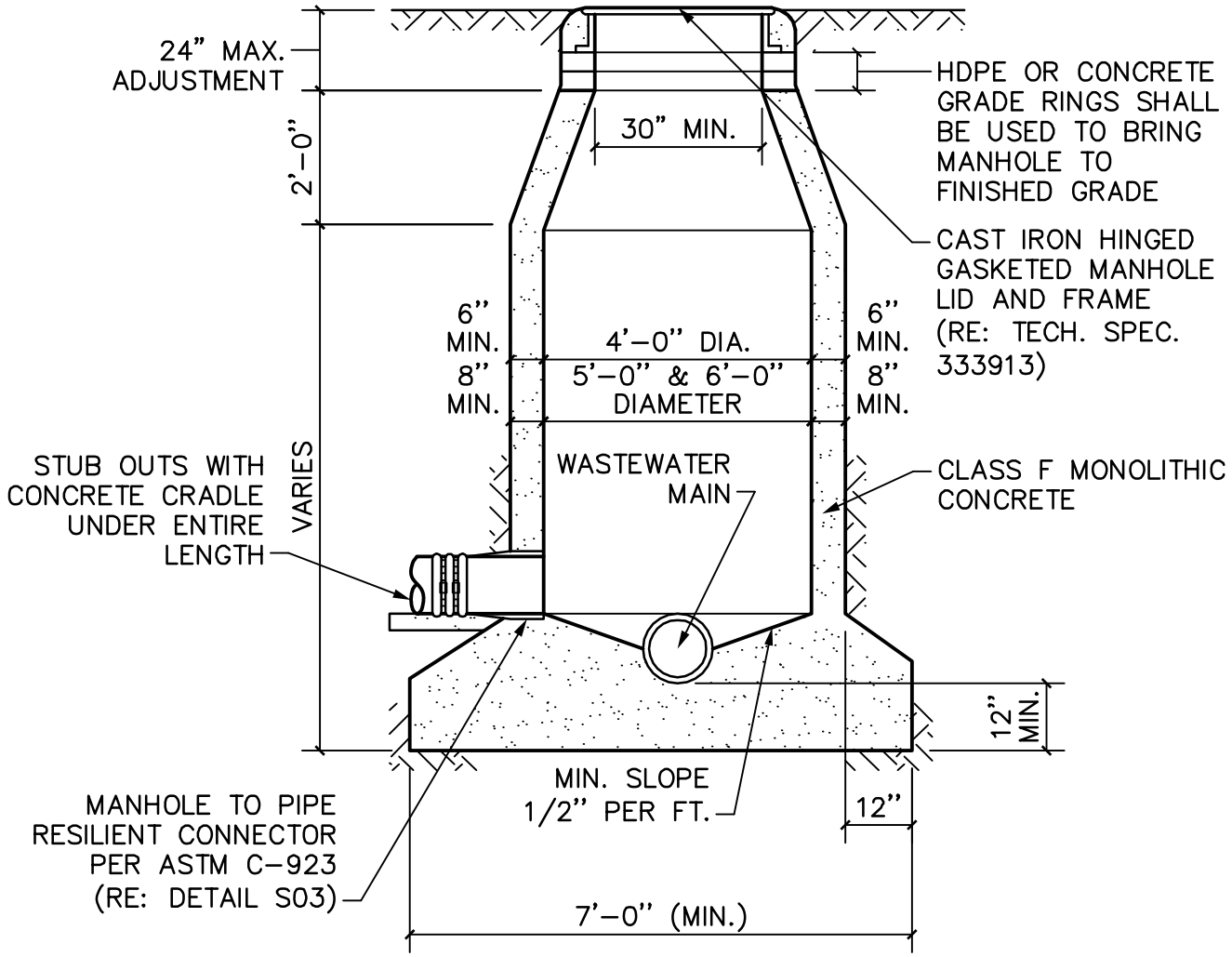

NOTES:

1. MANHOLES DEEPER THAN FIFTEEN FEET (15') SHALL BE A MINIMUM OF FIVE-FOOT (5') DIAMETER.
2. DROP MANHOLES SHALL BE REQUIRED WHEN THE INFLOW ELEVATION IS MORE THAN TWENTY-FOUR INCHES (24") ABOVE THE OUTFALL ELEVATION.
3. THERE SHALL BE A MINIMUM OF TWO-TENTHS OF A FOOT (0.2') DROP BETWEEN INVERTS OF PIPES IN AND OUT OF MANHOLES.
4. WHERE UNEQUAL PIPES ENTER A MANHOLE, THE CROWN OF THE PIPES SHALL BE SET AT THE SAME ELEVATION.
5. REFER TO TECHNICAL SPECIFICATION 333914.

FRISCO PROGRESS IN MOTION.	STANDARD CONSTRUCTION DETAIL **STANDARD CAST-IN-PLACE MANHOLE**	SCALE: 3/8"=1'-0" REVISED: MAR 2012 S01

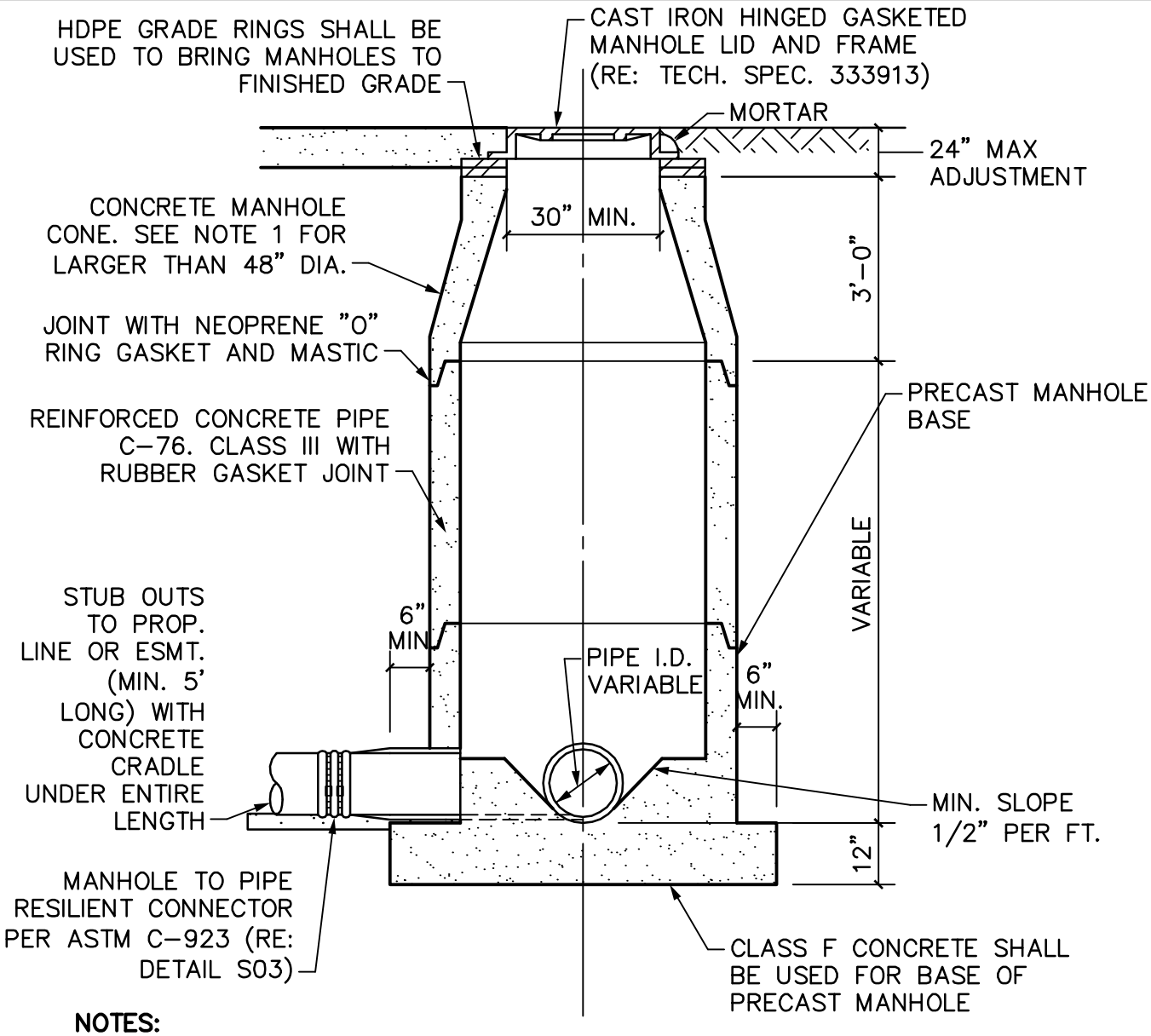

NOTES:

1. MANHOLES DEEPER THAN FIFTEEN FEET (15') SHALL BE A MINIMUM OF FIVE-FOOT (5') DIAMETER.
2. DROP MANHOLES SHALL BE REQUIRED WHEN THE INLET PIPE FLOWLINE ELEVATION IS MORE THAN TWENTY-FOUR INCHES (24") ABOVE THE OUTLET PIPE FLOWLINE ELEVATION.
3. THERE SHALL BE A MINIMUM OF TWO-TENTHS OF A FOOT (0.2') DROP BETWEEN INVERTS OF PIPES IN AND OUT OF MANHOLES.
4. WHERE UNEQUAL PIPES ENTER A MANHOLE, THE CROWN OF THE PIPES SHALL BE SET AT THE SAME ELEVATION.
5. REFER TO TECHNICAL SPECIFICATION 333915.

FRISCO PROGRESS IN MOTION.	STANDARD CONSTRUCTION DETAIL **PRECAST CONCRETE MANHOLE**	SCALE: 3/8"=1'-0" REVISED: MAR 2012 S02

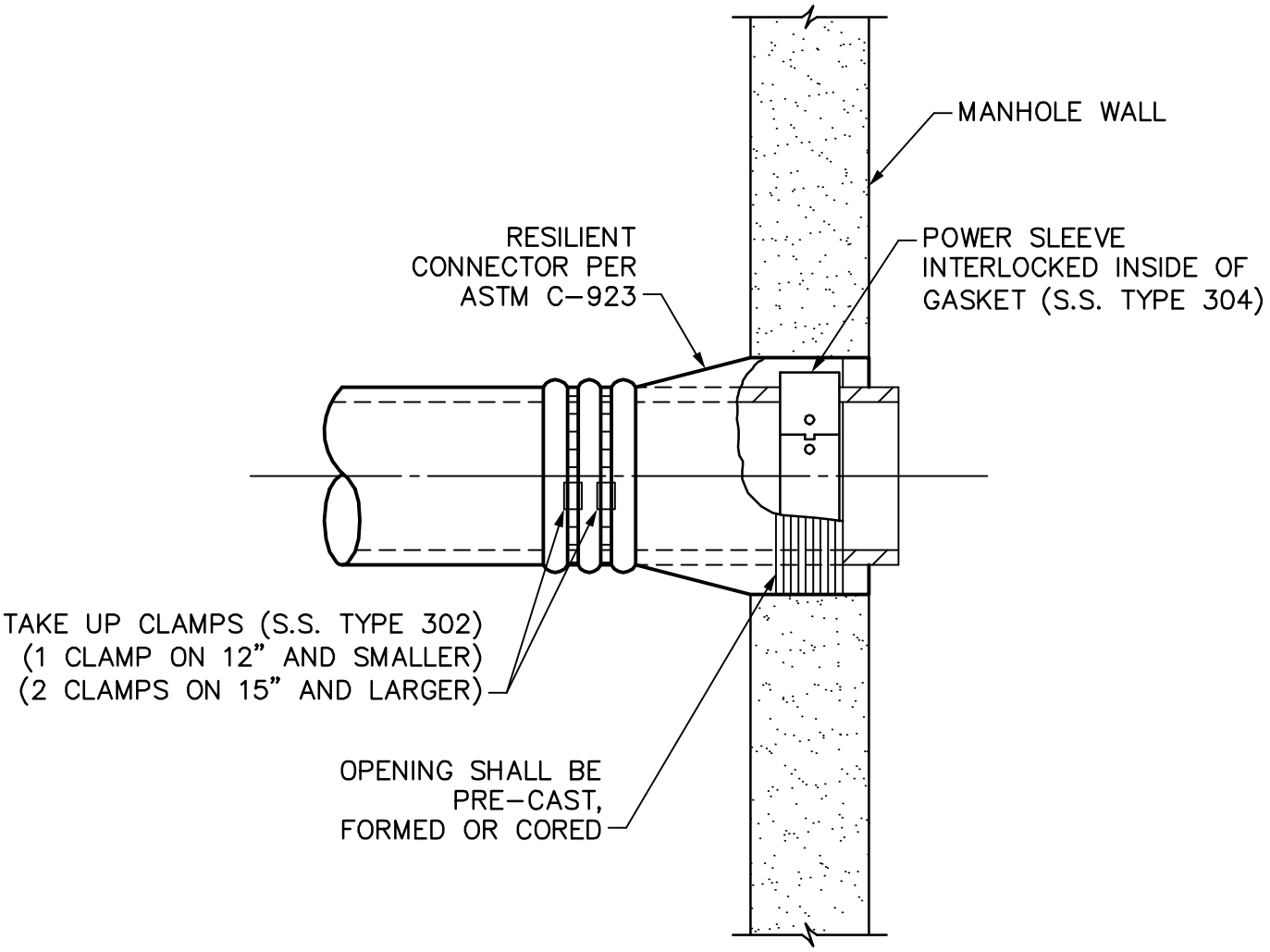

NOTE:

1. REFER TO APPROVED MATERIALS LIST.

FRISCO PROGRESS IN MOTION.	STANDARD CONSTRUCTION DETAIL **MANHOLE TO PIPE RESILIENT CONNECTOR**	SCALE: 1"=1'-0" REVISED: MAR 2012 S03

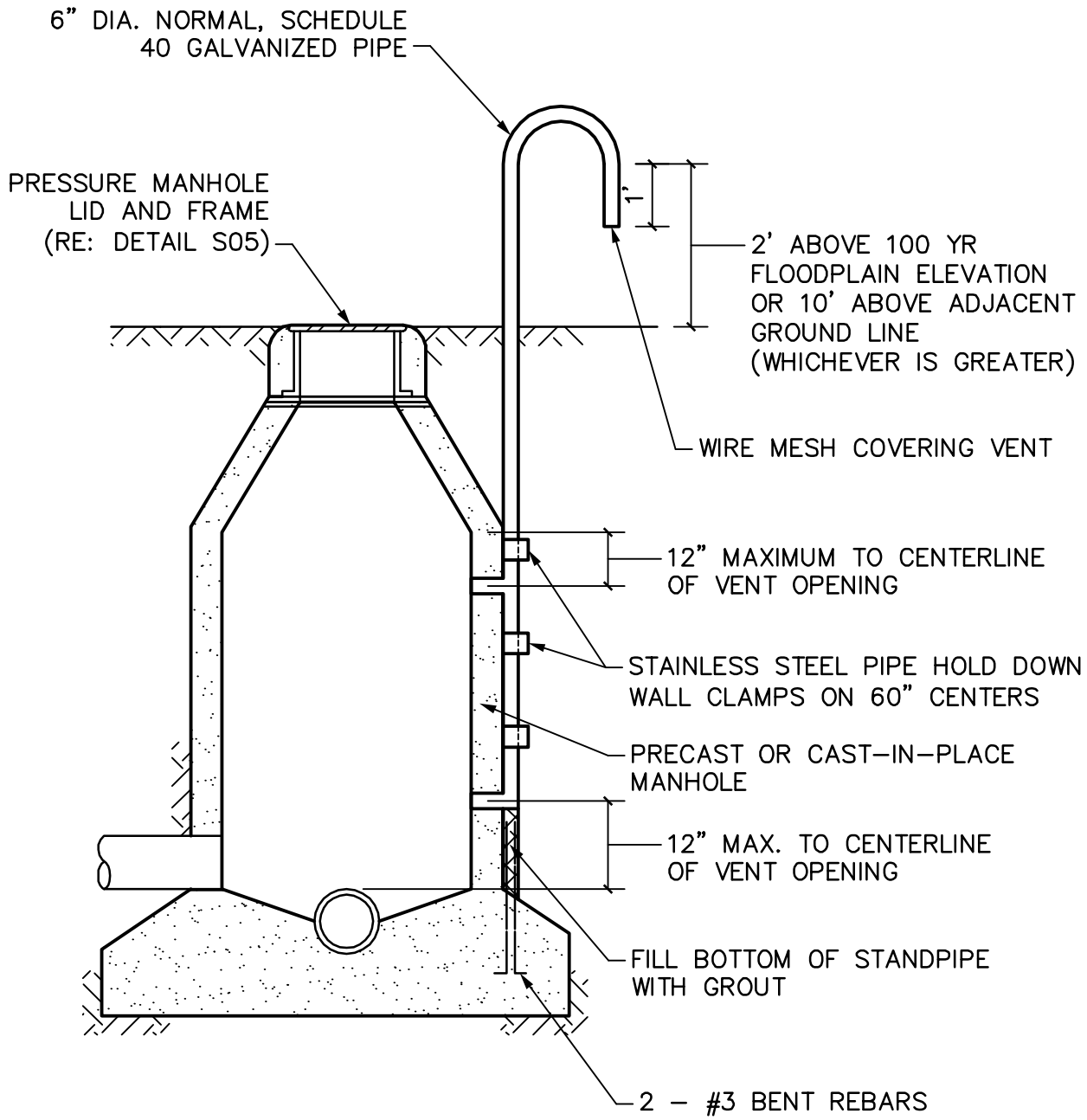

NOTE:

1. REFER TO STANDARD DETAIL S01 AND S02 FOR MANHOLE DETAILS.

FRISCO PROGRESS IN MOTION.	STANDARD CONSTRUCTION DETAIL **VENTED TYPE S MANHOLE**	SCALE: 3/8"=1'-0" REVISED: MAR 2012 S04

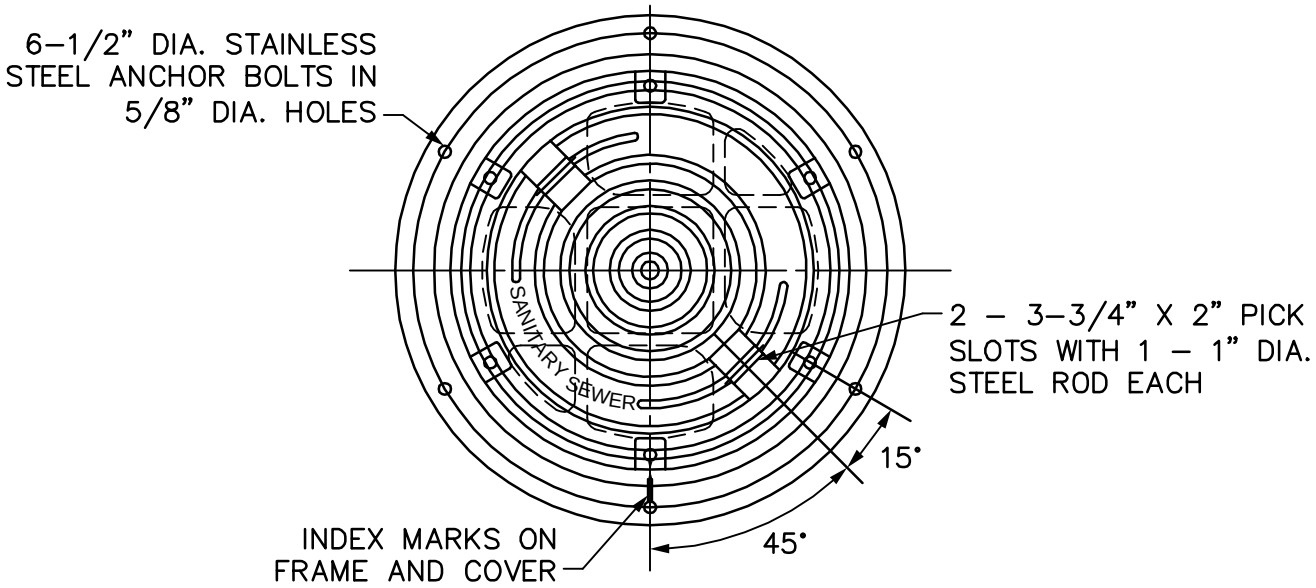

ASSEMBLY PLAN VIEW

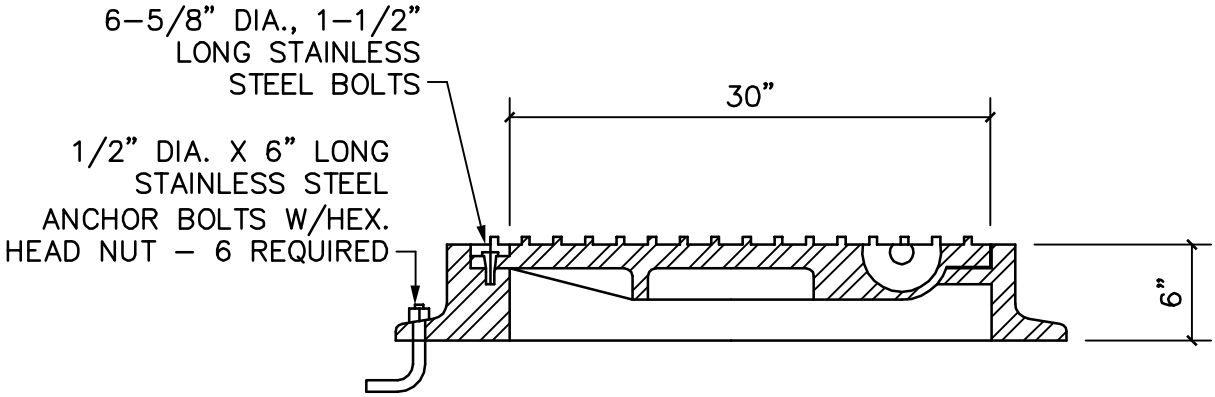

ASSEMBLY CROSS SECTION

NOTES:

1. THE HORIZONTAL BEARING SURFACES ARE TO BE MACHINE FINISHED.
2. FOR A SEAL BETWEEN THE RING FRAME AND COVER A 1/4" DIA. NEOPRENE "O–RING" GASKET SHALL BE INSTALLED BY THE MANUFACTURER. THE LOCATION SHALL BE AS PER THE MANUFACTURER'S STANDARDS BUT SHALL BE SUBJECT TO THE APPROVAL OF THE CITY.
3. THE SOLID LID WILL BE PROVIDED WITH MANUFACTURER'S STANDARD LETTERING SHOWING "SANITARY SEWER".
4. NOT ALLOWED IN TRAFFIC AREA.

FRISCO PROGRESS IN MOTION.	STANDARD CONSTRUCTION DETAIL **PRESSURE MANHOLE LID AND FRAME**	SCALE: 1"=1'–0" REVISED: MAR 2012 S05

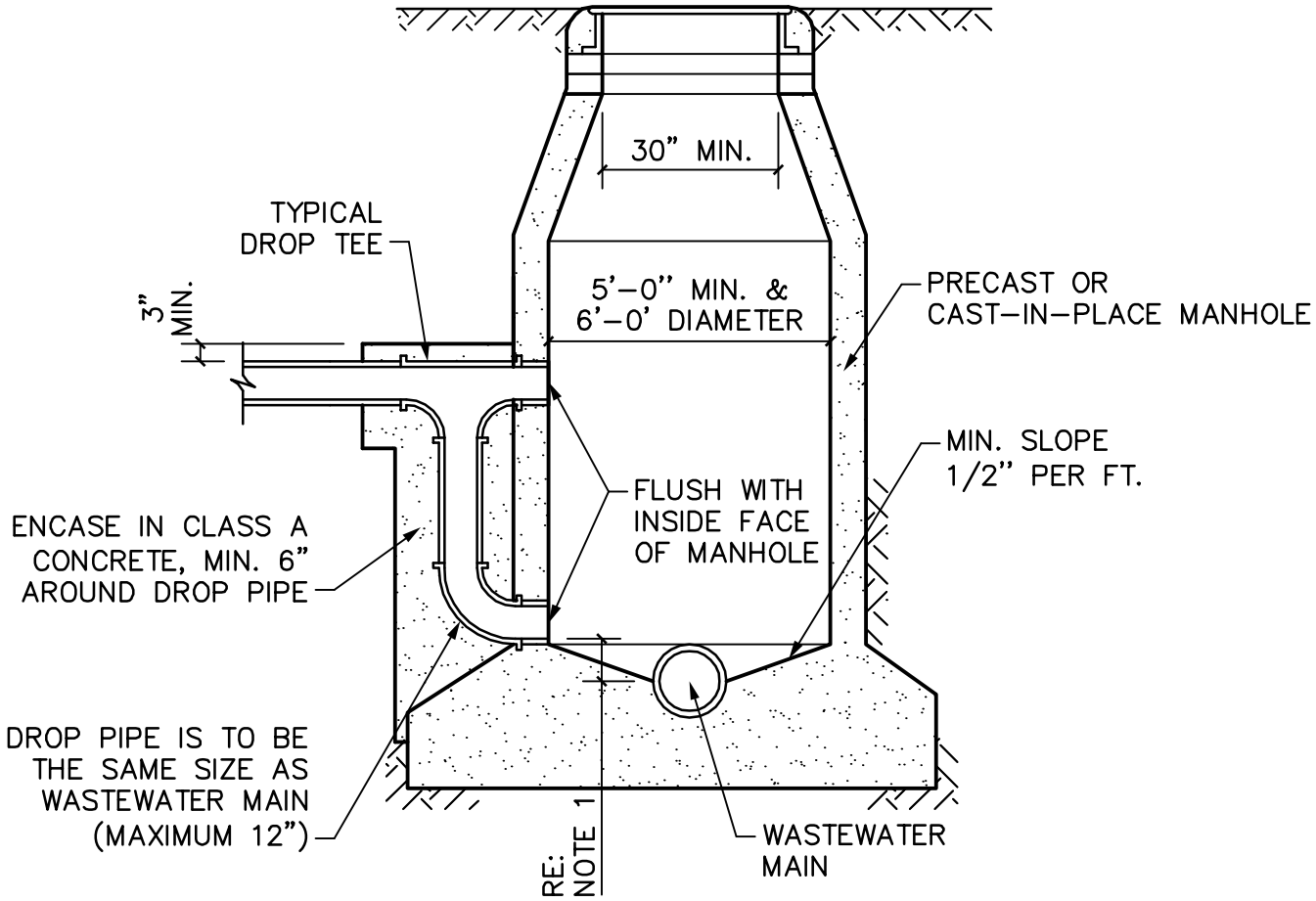

NOTES:

1. FLOWLINE OF DROP SHALL BE LOCATED BETWEEN THE CENTERLINE AND TOP OF WASTEWATER MAIN.
2. THERE SHALL BE A MINIMUM OF TWO-TENTHS OF A FOOT (0.2') DROP BETWEEN INVERTS OF PIPES IN AND OUT OF MANHOLES.
3. WHERE UNEQUAL PIPES ENTER A MANHOLE, THE CROWN OF THE PIPES SHALL BE SET AT THE SAME ELEVATION.
4. REFER TO TECHNICAL SPECIFICATIONS 333914 AND 333915.

FRISCO PROGRESS IN MOTION.	STANDARD CONSTRUCTION DETAIL **MANHOLE DROP CONNECTION**	SCALE: 3/8"=1'-0" REVISED: MAR 2012 S06

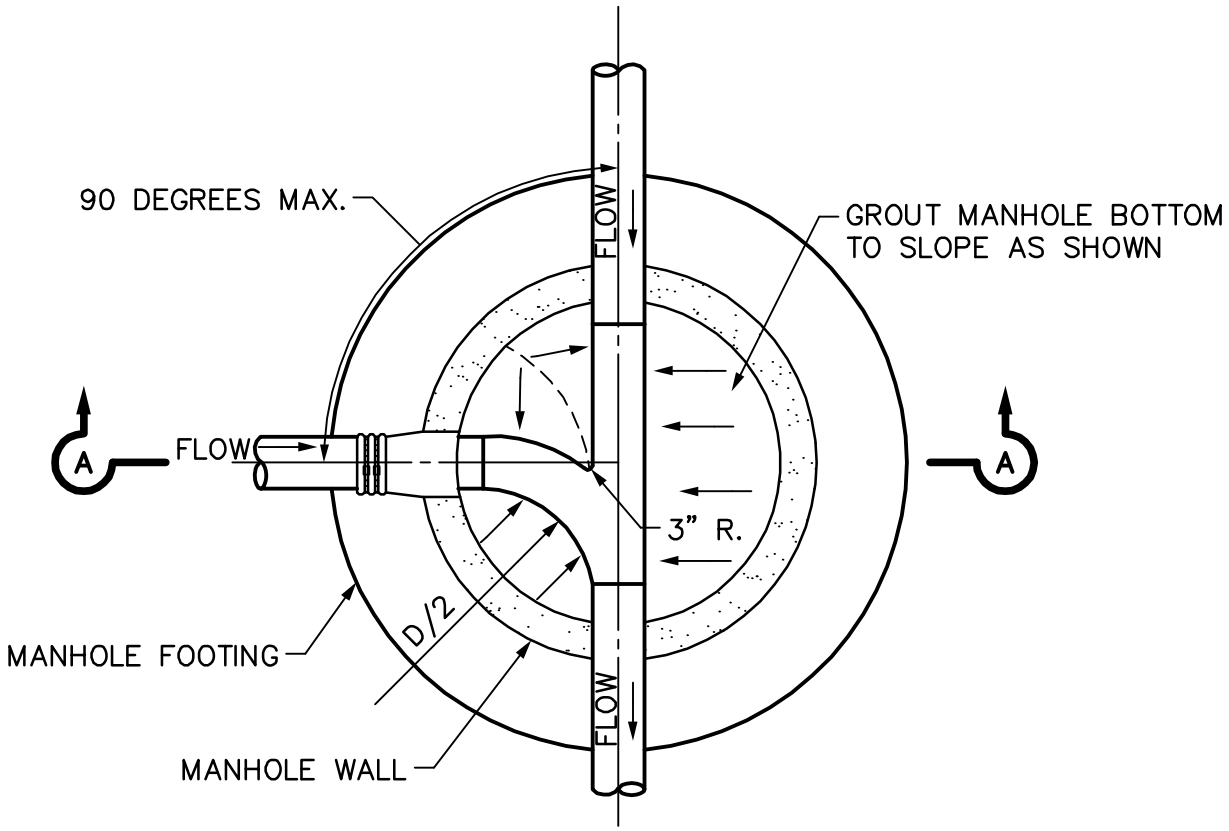

PLAN

D = MANHOLE DIAMETER

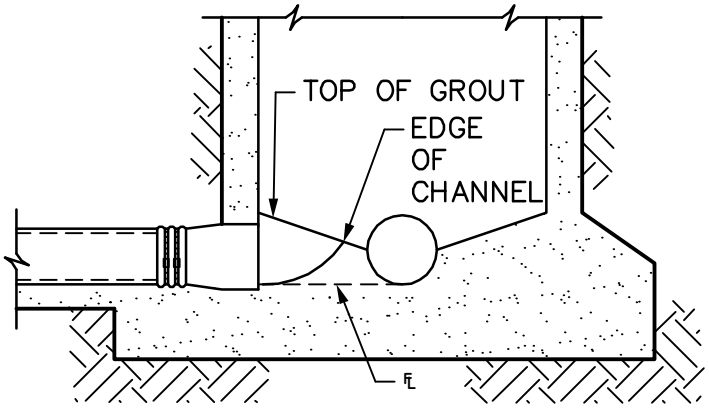

SECTION A-A

NOTE:

1. REFER TO MANHOLE STANDARD DRAWINGS FOR ADDITIONAL DETAIL OF MANHOLE (RE: DETAILS S01 & S02).

FRISCO PROGRESS IN MOTION.	STANDARD CONSTRUCTION DETAIL **WASTEWATER MANHOLE** **LINE INTERSECTION**	SCALE: 3/8"=1'-0" REVISED: MAR 2012 S07

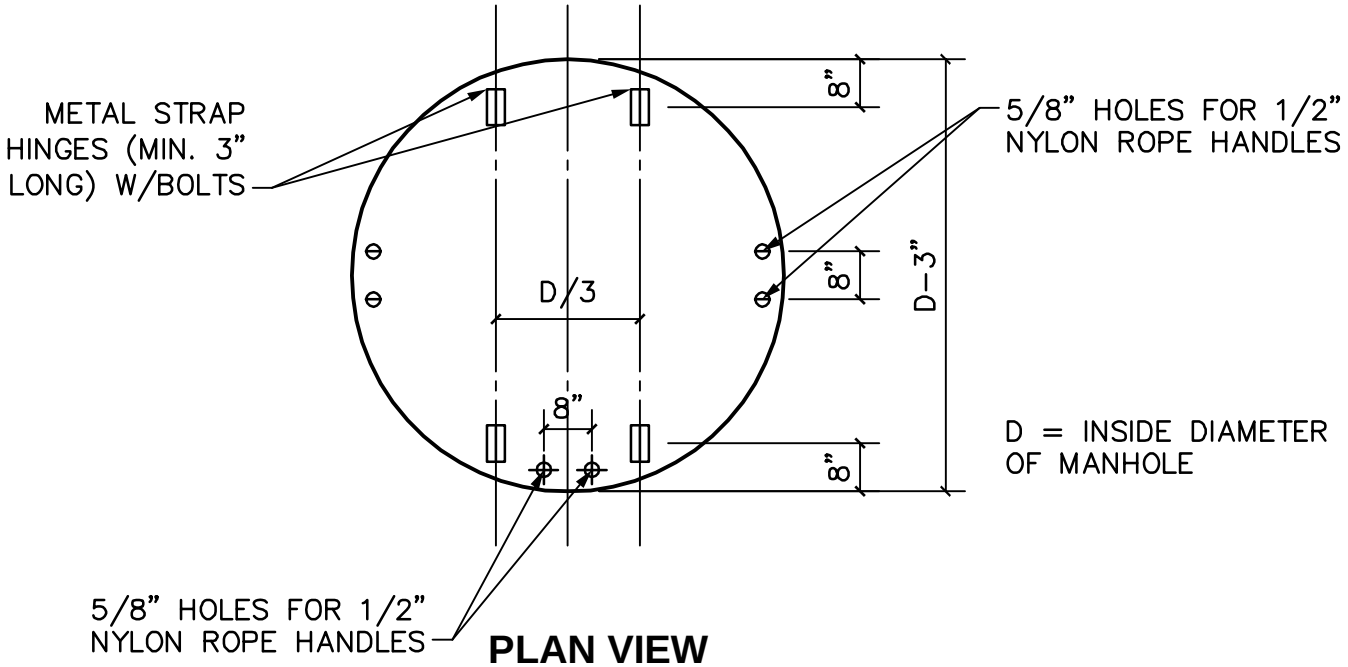

PLAN VIEW

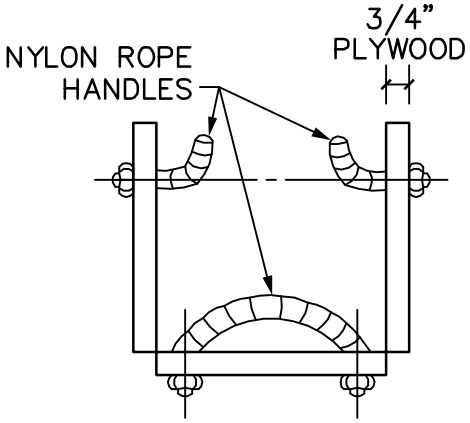

INSTALLATION AND REMOVAL POSITION

INSTALLATION

FALSE MANHOLE BOTTOM SHALL BE FURNISHED AND INSTALLED IN ALL MANHOLES CONSTRUCTED IN ADVANCE OF PAVING. THESE FALSE MANHOLE BOTTOMS WILL BE INSTALLED AT A TIME DIRECTED BY THE CITY BUT WILL USUALLY BE AFTER ALL WORK IS COMPLETED ON THE WASTEWATER SYSTEM INCLUDING THE AIR TEST, BUT PRIOR TO THE FINAL INSPECTION.

REMOVAL

FALSE MANHOLE BOTTOM SHALL BE REMOVED AFTER THE FINAL APPURTENANCE ADJUSTMENT INSPECTION. THE PAVING CONTRACTOR AND CITY INSPECTOR WILL COORDINATE THE REMOVAL OF THE FALSE MANHOLE BOTTOMS.

FRISCO PROGRESS IN MOTION.	STANDARD CONSTRUCTION DETAIL **WASTEWATER MANHOLE** **FALSE BOTTOM**	SCALE: 3/8"=1'-0" REVISED: MAR 2012 S08

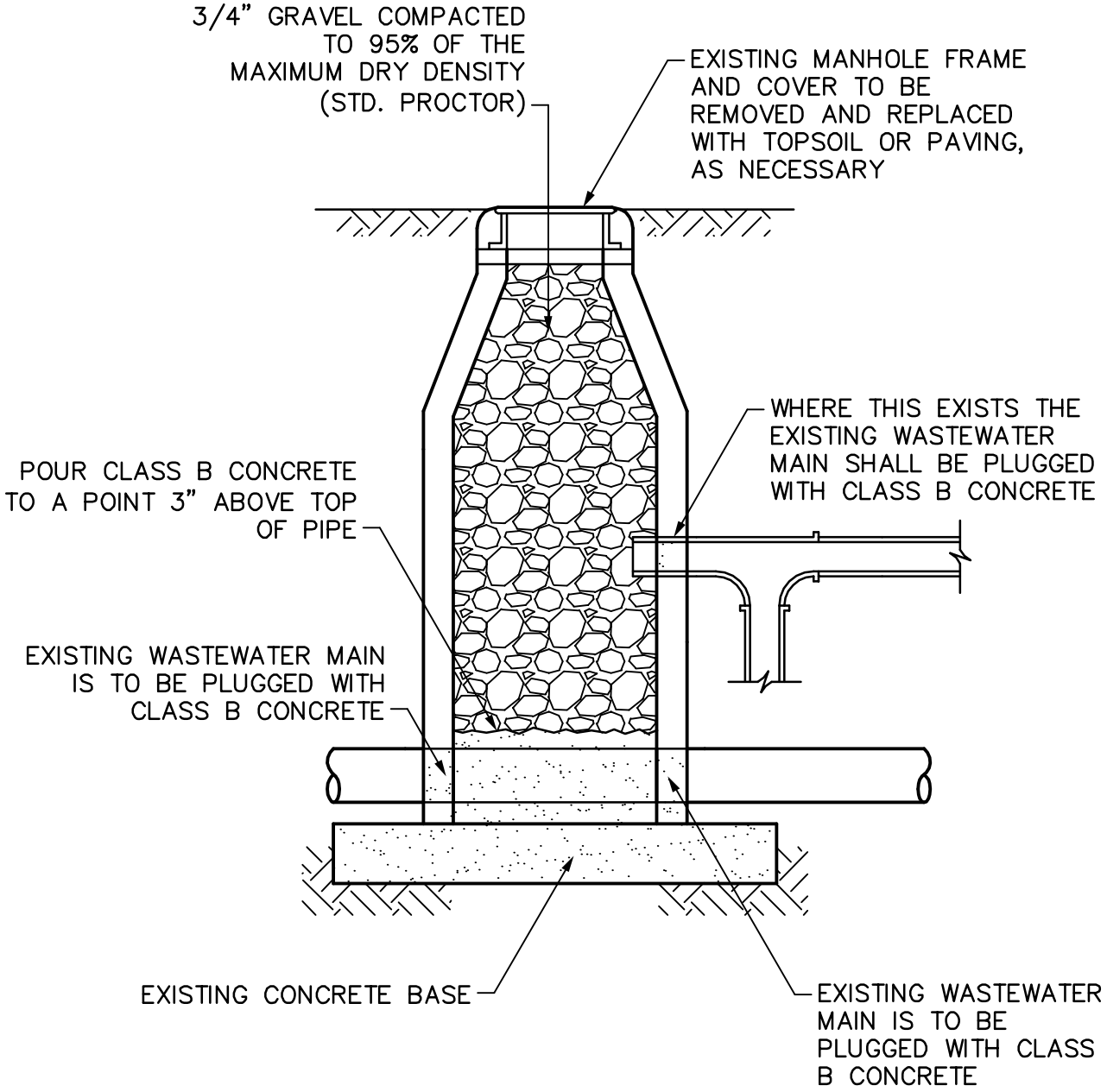

FRISCO PROGRESS IN MOTION.	STANDARD CONSTRUCTION DETAIL **MANHOLE ABANDONMENT**	SCALE: N.T.S. REVISED: MAR 2012 S09

H'	4	5	6	7	8	9	10	11	12	13	14	15	16	17	18	19	20	H'
Y'	10	12	14	17	19	22	24	27	29	31	34	36	39	41	43	46	48	Y'

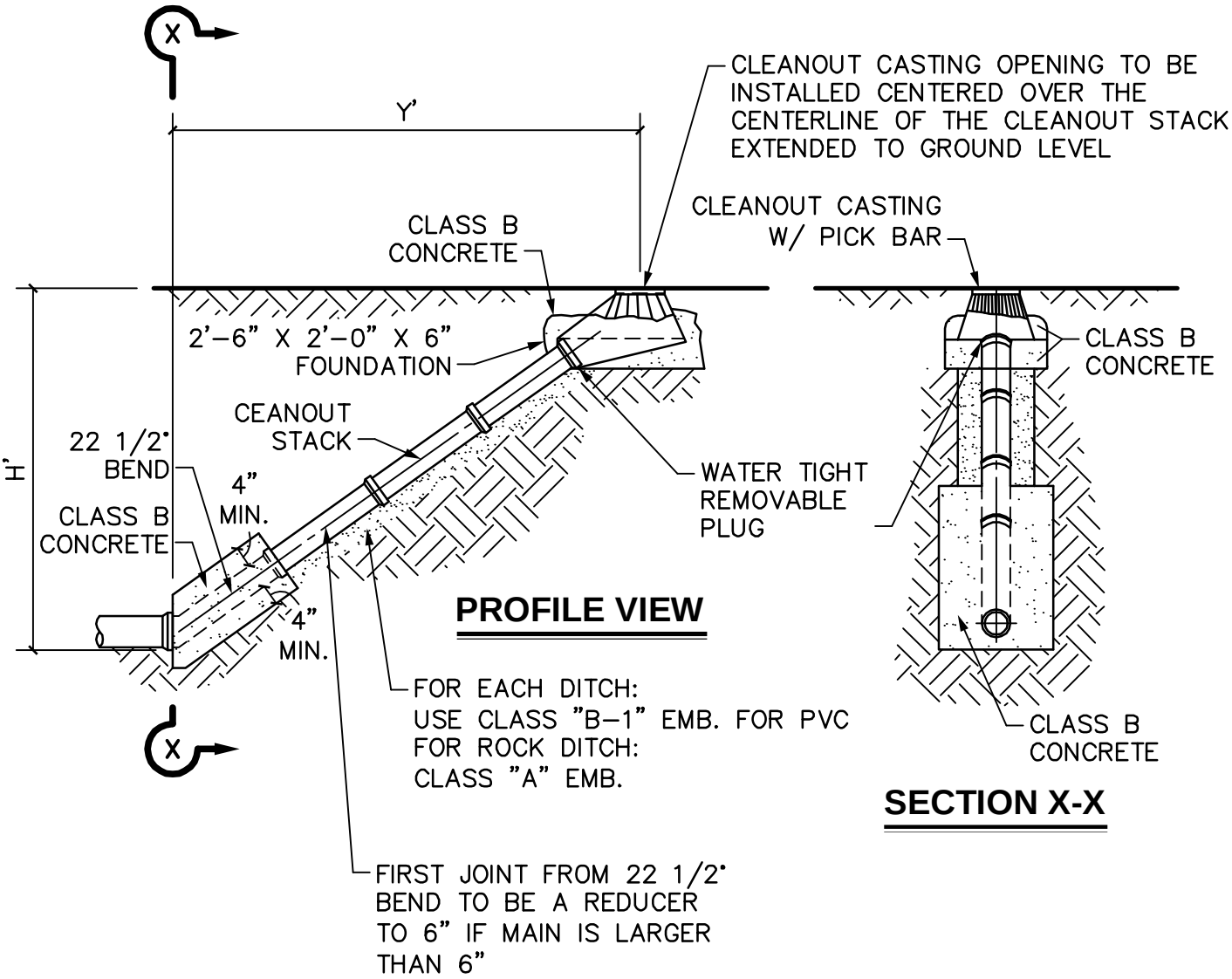

NOTES:

1. IF CLEANOUT IS PLACED IN ADVANCE OF PAVEMENT PLACE SAND AROUND CLEANOUT CASTING IN LIEU OF CLASS B CONCRETE.

2. IF CLEANOUT IS OUTSIDE OF PAVEMENT, CENTER CASTING IN 24" X 24" CLASS A CONCRETE PAD 6" THICK WITH FOUR #3 BARS.

FRISCO PROGRESS IN MOTION.	STANDARD CONSTRUCTION DETAIL **WASTEWATER MAIN** **CLEANOUT**	SCALE: 3/8"=1'-0" REVISED: MAR 2012 S10

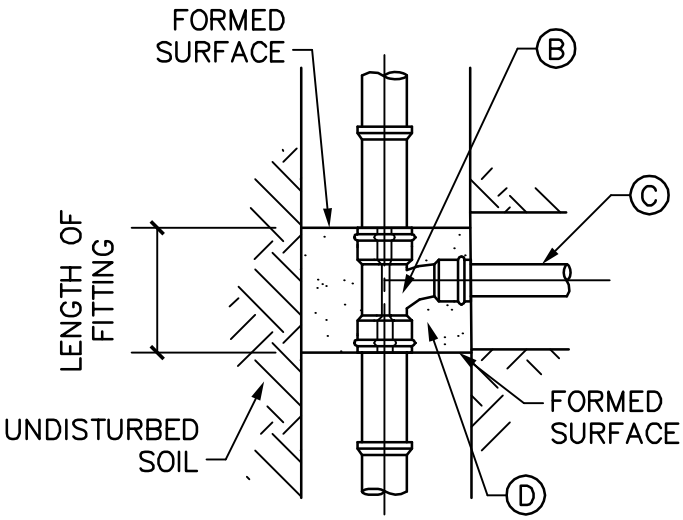

PLAN VIEW

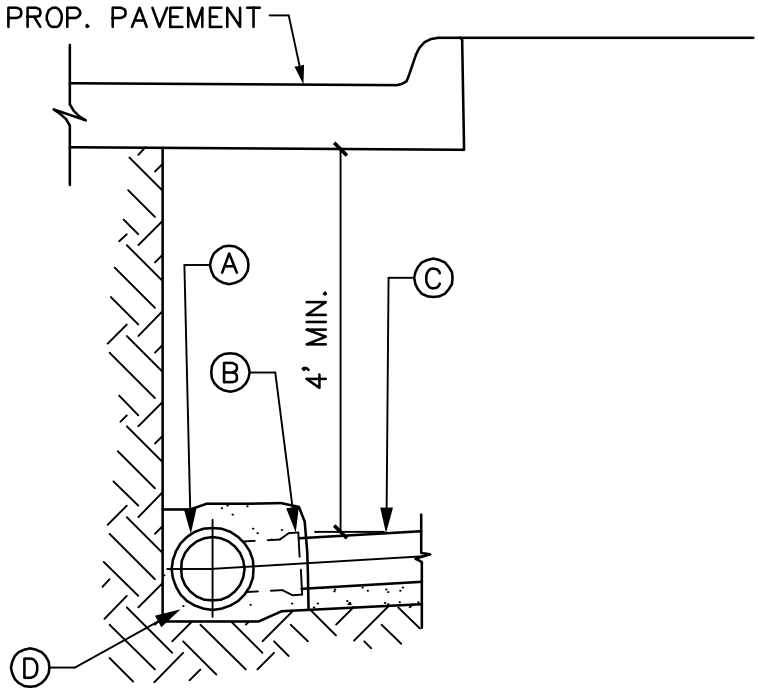

SECTION VIEW

KEY:

- (A) WASTEWATER MAIN
- (B) 4" WYE
- (C) 4" WASTEWATER LAT. (LENGTH VARIES)
- (D) CLASS B CONCRETE

NOTES:

1. THE CLEANOUT MAY BE PLACED IN THE PARKWAY OR SIDEWALK, IF NECESSARY.
2. REFERENCE TECHNICAL SPECIFICATION 333109.

FRISCO PROGRESS IN MOTION.	STANDARD CONSTRUCTION DETAIL **WASTEWATER LATERAL**	SCALE: 1/2"=1'-0" REVISED: MAR 2012 S11

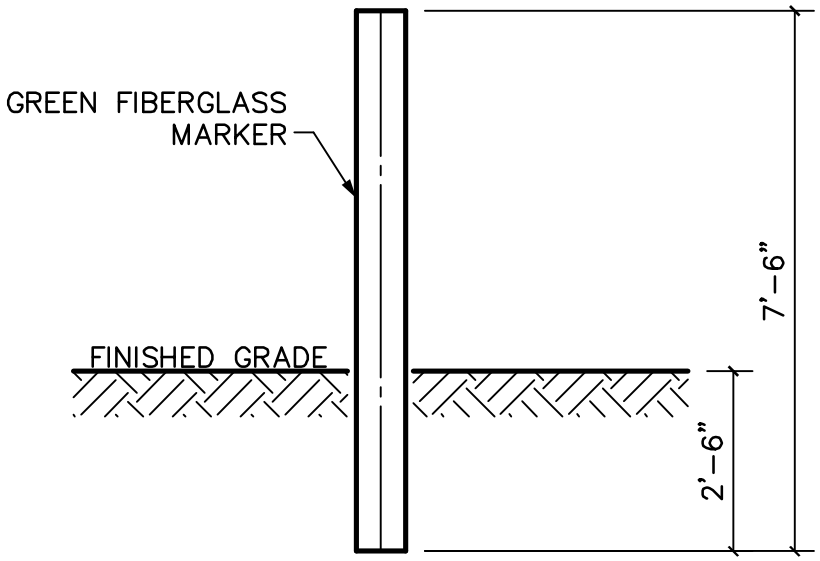

ELEVATION

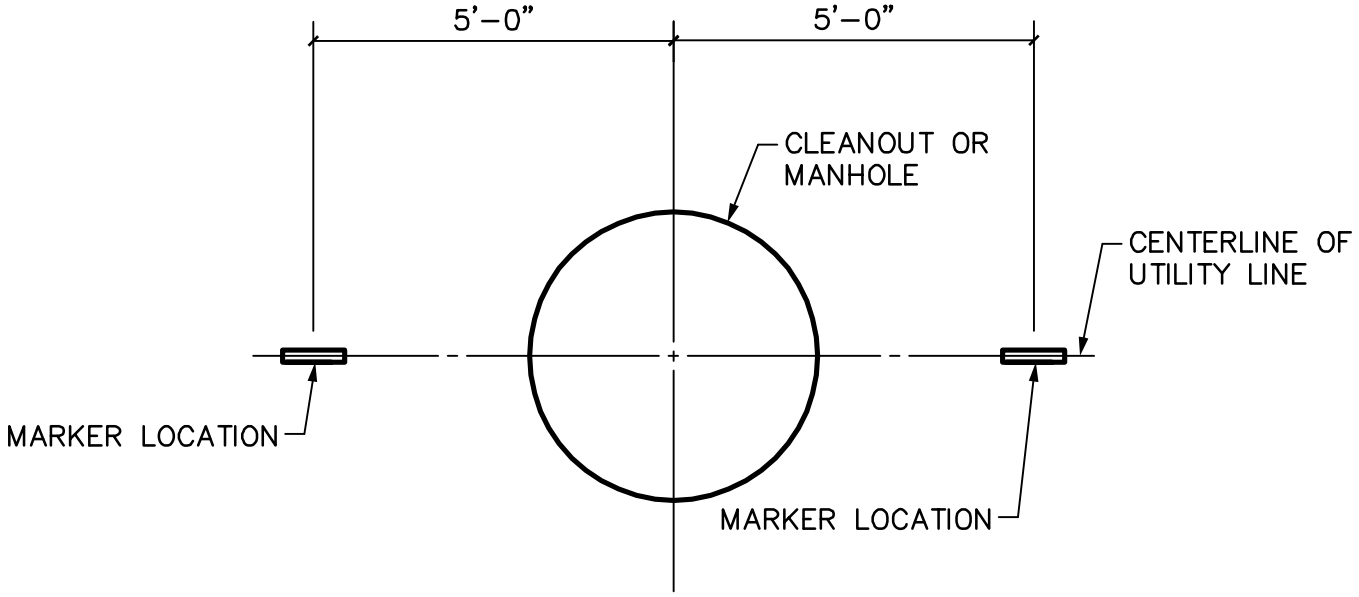

FIELD INSTALLATION DETAIL

NOTES:

1. ALL OFFSITE CITY OF FRISCO MAINS WITH CLEANOUTS AND MANHOLES SHALL BE MARKED AS DETAILED ON THIS SHEET.

2. THE OFFSITE SANITARY SEWER MARKER SHALL HAVE THE FOLLOWING WRITING: "CITY OF FRISCO SANITARY SEWER".

FRISCO PROGRESS IN MOTION.	STANDARD CONSTRUCTION DETAIL **OFFSITE WASTEWATER MARKER**	SCALE: 3/8"=1' REVISED: MAR 2012 S12

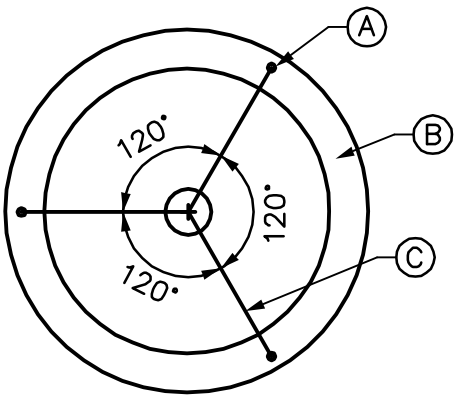

PLAN

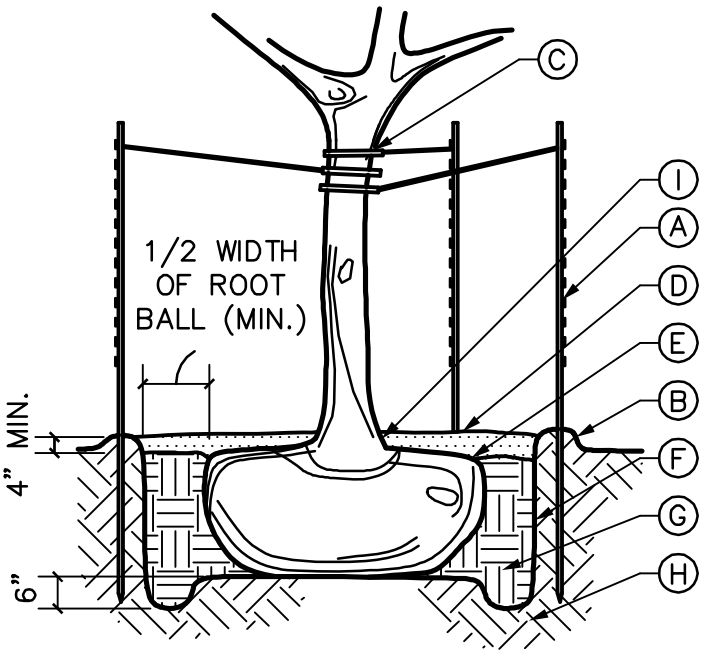

SECTION

LEGEND:

Ⓐ 2"x2"x8' STEEL POST APPROVED STAKES, 3 PER TREE, SPACED EQUALLY, DRIVEN 2' INTO GROUND

Ⓑ 4" EARTH SAUCER (12" WIDE)

Ⓒ ArborTie PRODUCT BY DEEP ROOT PARTNERS, L.P. OR APPROVED EQUAL INSTALLED PER CITY–APPROVED MANUFACTURER'S SPECIFICATIONS

Ⓓ 1" COMPOST & 3" CYPRESS MULCH, KEEP 3–4" BACK FROM ROOT FLARE. (RE: TECH. SPEC. 329301)

Ⓔ ROOT BALL: REMOVE BURLAP, BURLAP TIES, AND WIRE BASKET FROM TOP 1/3 OF ROOT BALL. REMOVE ALL NYLON STRINGS, PLASTIC LINERS, AND OTHER SYNTHETIC MATERIALS FROM THE ENTIRE ROOT BALL.

Ⓕ PLANTING PIT SHALL BE EXCAVATED TWO TIMES WIDTH OF ROOT BALL. PIT DEPTH SHALL BE AS NEEDED TO SET ROOT BALL COLLAR AT PROPOSED FINISHED GRADE. PLACE ROOT BALL ON SOLID SOIL AND NOT LOOSE BACKFILL.

Ⓖ PIT BACKFILL SOIL (RE: TECH. SPEC. 329301)

Ⓗ UNDISTURBED EARTH

Ⓘ EXPOSE ROOT FLARE

NOTES:

1. EDGE OF ROOT BALL SHOULD BE 4' MIN. FROM WATER METER.
2. PLANT TREES AT LEAST 4' FROM OUTSIDE EDGE OF PIPELINE.
3. REFER TO TECHNICAL SPECIFICATION 329300.

FRISCO PROGRESS IN MOTION.	STANDARD CONSTRUCTION DETAIL **TREE PLANTING (SINGLE TRUNK)**	SCALE: N.T.S. REVISED: MAR 2012 L01

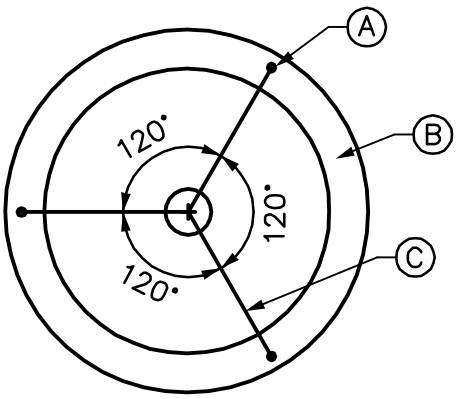

PLAN

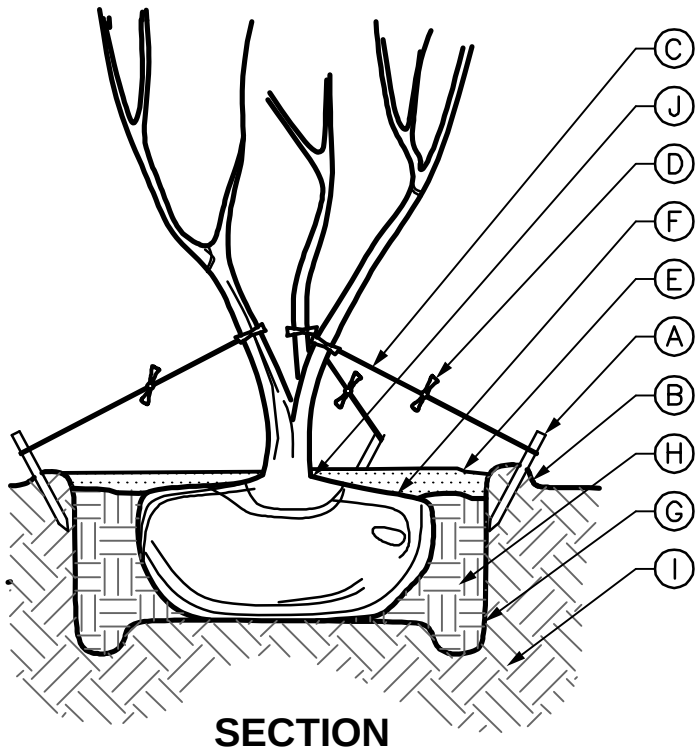

SECTION

LEGEND:

(A) 2"x2"x24" WOOD STAKE, 3 PER TREE, SPACED EQUALLY

(B) 4" EARTH SAUCER (12" WIDE)

(C) ArborTie PRODUCT BY DEEP ROOT PARTNERS, L.P. OR APPROVED EQUAL INSTALLED PER CITY–APPROVED MANUFACTURER'S SPECIFICATIONS

(D) WARNING FLAGS

(E) 1" COMPOST & 3" CYPRESS MULCH, KEEP 3–4" BACK FROM ROOT. (RE: TECH. SPEC. 329301)

(F) ROOT BALL: REMOVE BURLAP, BURLAP TIES, AND WIRE BASKET FROM TOP 1/3 OF ROOT BALL. REMOVE ALL NYLON STRINGS, PLASTIC LINERS, AND OTHER SYNTHETIC MATERIALS FROM THE ENTIRE ROOT BALL.

(G) PLANTING PIT SHALL BE EXCAVATED TWO TIMES WIDTH OF ROOT BALL. PIT DEPTH SHALL BE AS NEEDED TO SET ROOT BALL COLLAR AT PROPOSED FINISHED GRADE. PLACE ROOT BALL ON SOLID SOIL AND NOT LOOSE BACKFILL.

(H) PIT BACKFILL SOIL (RE: TECH. SPEC. 329301)

(I) UNDISTURBED EARTH

(J) EXPOSE ROOT FLARE

NOTES:

1. EDGE OF ROOT BALL SHOULD BE 4' MIN. FROM WATER METER.
2. PLANT TREES AT LEAST 4' FROM OUTSIDE EDGE OF PIPELINE.
3. REFER TO TECHNICAL SPECIFICATION 329300.

FRISCO PROGRESS IN MOTION.	STANDARD CONSTRUCTION DETAIL **TREE PLANTING (MULTI-TRUNK)**	SCALE: N.T.S. REVISED: MAR 2012 L02

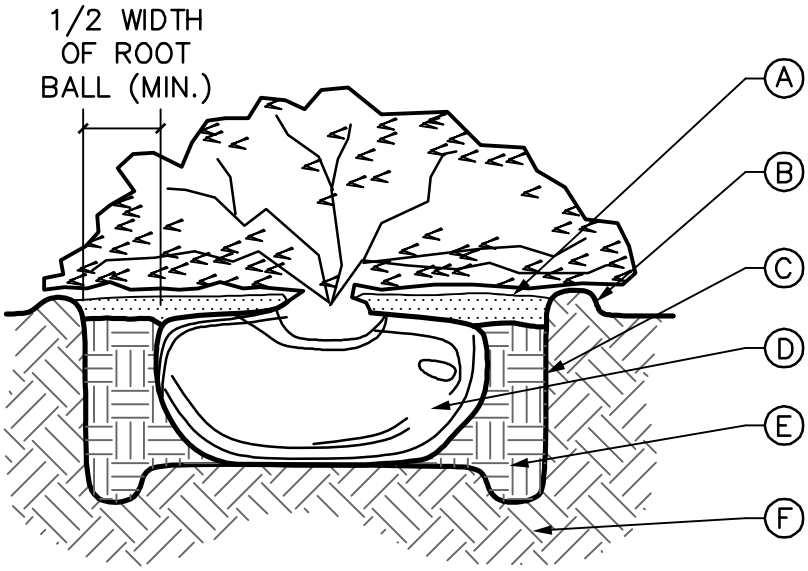

LEGEND:

(A) 1" COMPOST & 3" CYPRESS (RE: TECHNICAL SPECIFICATION 329301)

(B) 4" EARTH SAUCER (12" WIDE)

(C) PLANTING PIT SHALL BE EXCAVATED TWO TIMES WIDTH OF ROOT BALL. PIT DEPTH SHALL BE AS NEEDED TO SET ROOT BALL COLLAR AT PROPOSED FINISHED GRADE. PLACE ROOT BALL ON SOLID SOIL AND NOT LOOSE BACKFILL. SCARIFY SIDES OF PIT. PROVIDE CONTINUOUS PIT FOR MASS BED PLANTINGS.

(D) ROOT BALL: REMOVE BURLAP, BURLAP TIES, AND WIRE BASKET FROM TOP 1/3 OF ROOT BALL. REMOVE ALL NYLON STRINGS, PLASTIC LINERS, AND OTHER SYNTHETIC MATERIALS FROM THE ENTIRE ROOT BALL.

(E) PIT BACKFILL SOIL (RE: TECHNICAL SPECIFICATION 329301)

(F) UNDISTURBED EARTH

NOTES:

1. PROVIDE STEEL EDGING WHERE BED MEETS LAWN (RE: DETAIL P07).
2. REFER TO TECHNICAL SPECIFICATION 329300.

FRISCO PROGRESS IN MOTION.	STANDARD CONSTRUCTION DETAIL **SHRUB PLANTING**	SCALE: N.T.S. REVISED: MAR 2012 L03

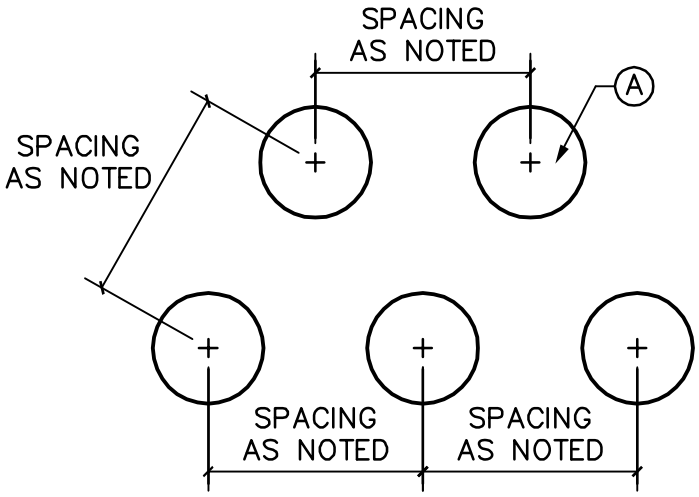

PLAN

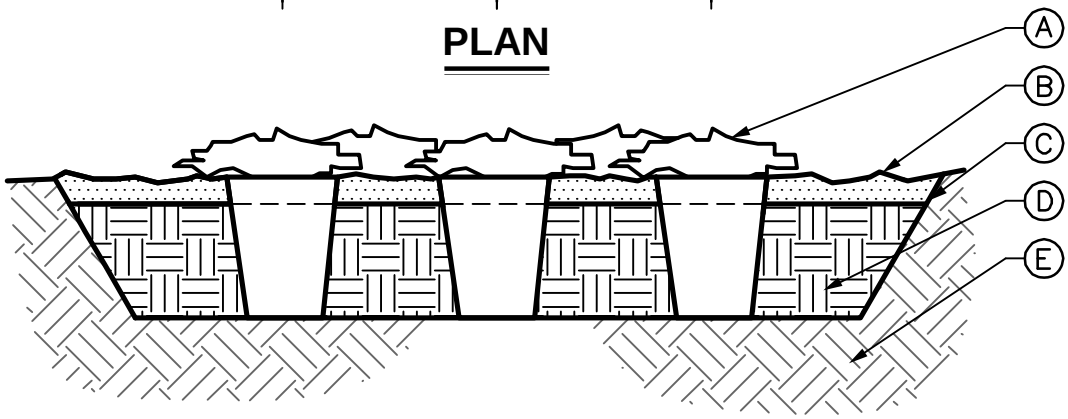

SECTION

LEGEND:

Ⓐ GROUNDCOVER PER PLAN (RE: TECHNICAL SPECIFICATION 329300)

Ⓑ 1" COMPOST & 3" CYPRESS MULCH (RE: TECHNICAL SPECIFICATION 329301)

Ⓒ STEEL EDGING WHERE BEDS MEET LAWN (RE: DETAIL L07)

Ⓓ PIT BACKFILL SOIL (RE: TECHNICAL SPECIFICATION 329301)

Ⓔ UNDISTURBED EARTH

FRISCO PROGRESS IN MOTION.	STANDARD CONSTRUCTION DETAIL **GROUNDCOVER PLANTING**	SCALE: N.T.S. REVISED: MAR 2012 L04

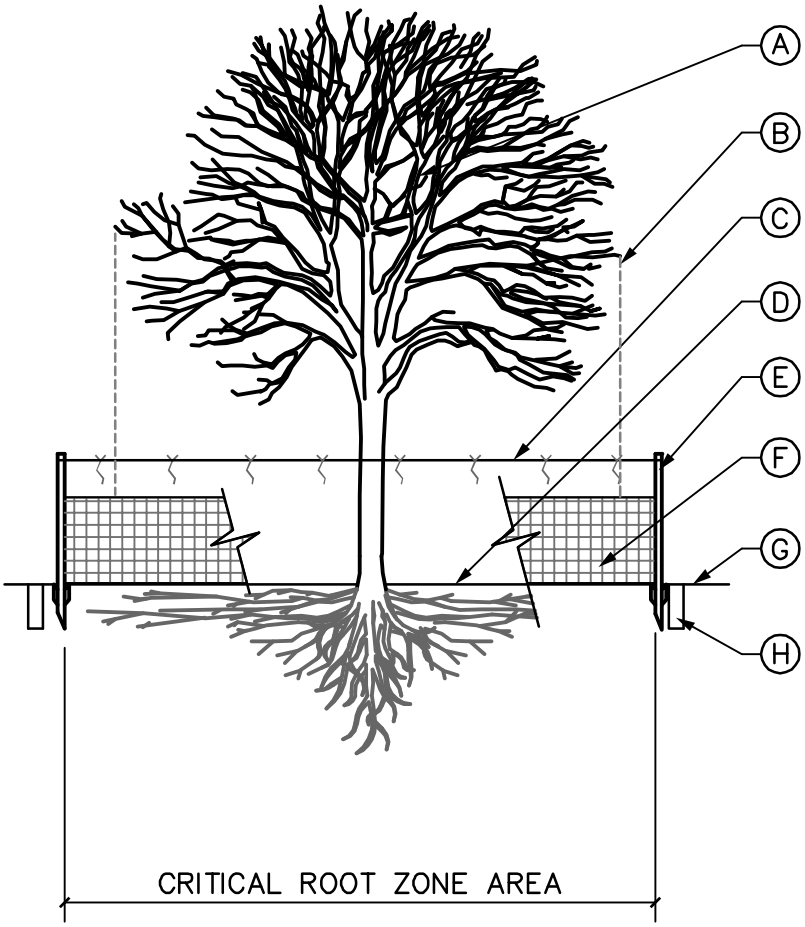

LEGEND:

- (A) EXISTING TREE(S) TO REMAIN
- (B) DRIP LINE OF EXISTING TREE (TYP.)
- (C) CONTINUOUS NYLON TIE STRING TIED TO STAKE TOPS W/ 2' TUNDRA WEIGHT ORANGE STREAMERS AT 3' O.C.
- (D) EXISTING GRADE TO REMAIN
- (E) 2"x2"x8' STEEL POST T-STAKES, 8' O.C. MIN., DRIVEN 2' INTO GROUND AT (OR OUTSIDE) TREE DRIP LINE
- (F) 4' MIN HEIGHT ORANGE PLASTIC FENCING INSTALLED PER CITY-APPROVED MANUFACTURER'S SPECIFICATIONS
- (G) EXISTING GRADE TO BE DISTURBED
- (H) ROOT PRUNING TRENCH 12" OUTSIDE FENCE

NOTES:

1. PERFORM ROOT PRUNING ON ALL EXISTING TREES TO REMAIN WHERE CONSTRUCTION ACTIVITY FALLS WITHIN DRIP LINE OF EXISTING TREES.
2. NO GRADING, PARKING, STORAGE OR ANY OTHER CONSTRUCTION ACTIVITY WITHIN FENCED AREA.
3. REFER TO TECHNICAL SPECIFICATION 329600.
4. TREE PRUNING BY CERTIFIED TREE TRIMMER OR ARBORIST.

FRISCO PROGRESS IN MOTION.	STANDARD CONSTRUCTION DETAIL **TREE PROTECTION**	SCALE: N.T.S. REVISED: MAR 2012 L05

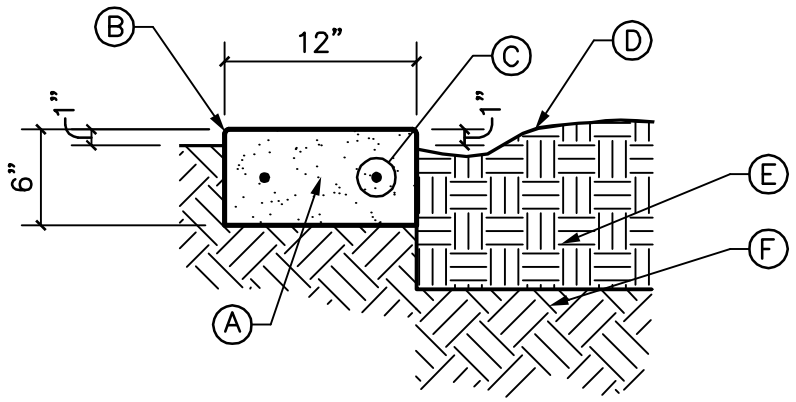

LEGEND:

(A) CLASS A CONCRETE (RE: TECHNICAL SPECIFICATION 321313) WITH SAWCUTS 1/8" TO 3/16" WIDE AND ONE-THIRD THE DEPTH OF THE ACTUAL THICKNESS AT 6' O.C. (MAXIMUM)

(B) 1/2 " TOOLED RADIUS EDGE (TYP.)

(C) 2 – #4 BAR CONTINUOUS

(D) PLANTING BED OR SOD

(E) PIT BACKFILL SOIL (RE: TECHNICAL SPECIFICATION 329301)

(F) UNDISTURBED EARTH

FRISCO PROGRESS IN MOTION.	STANDARD CONSTRUCTION DETAIL **CONCRETE MOW STRIP**	SCALE: 1"=1-0"' REVISED: MAR 2012 L06

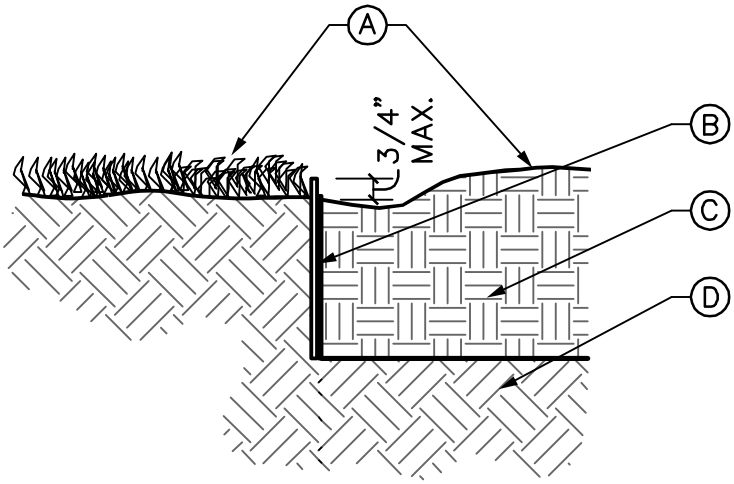

LEGEND:

Ⓐ DIFFERENT PLANTING TREATMENTS

Ⓑ STEEL EDGING WHERE BEDS MEET LAWN PER CITY–APPROVED MANUFACTURER'S INSTRUCTIONS

Ⓒ PIT BACKFILL SOIL (RE: TECHNICAL SPECIFICATION 329301)

Ⓓ UNDISTURBED EARTH

FRISCO PROGRESS IN MOTION.	STANDARD CONSTRUCTION DETAIL **STEEL EDGING**	SCALE: 1"=1'–0" REVISED: MAR 2012 L07

APPENDIX A

DEFINITIONS AND ABBREVIATIONS

Definitions

The definitions within this Section are intended to provide descriptions for words and terms used within the Engineering Standards. When words and terms are defined herein, and are also defined in other ordinance(s) of the City, they shall be read in harmony unless there exists an irreconcilable conflict, in which case the definition contained in this Section shall control for the Engineering Standards. Where no definition appears, then the term should be interpreted according to their customary usage in the practice of municipal planning and engineering. The City has the final determination of interpretation.

Words used in the present tense include the future; words in the singular number include the plural number, and words used in the plural number include the singular number. The word shall is mandatory and not directory. The word may is directory and not mandatory.

Approved, Accepted, Directed, Required, and Words of Like Import: Whenever they apply to the work or its performance, the words "directed," "accepted," "required," "permitted," "ordered," "designated," "established," "prescribed" and words of like shall imply the direction, requirement, permission, order, designation or prescription of the City; and "approved," "acceptable," "satisfactory" and words of like import shall mean approved by, acceptable to or satisfactory to the City.

Backfill: The term means the following (1) the placement of new dirt, fill, or other material to refill an Excavation; or (2) the return of excavated dirt, fill or other material to an Excavation.

City: The term City means the City of Frisco or its authorized representative(s).

Compaction: The term refers to consolidating material to prevent future settlement

Contract or Contract Documents: Contract documents are all of the written, printed, typed, drawn instruments, plans, and specifications that comprise and govern the performance of the contract between the Owner and the Contractor.

Contractor: The person, persons, partnership, firm, corporation, association or organization, or any combination thereof, as an independent contractor entering into the contract for the execution of the work, acting directly or through a duly authorized representative. Contractor does not refer to the City.

Development: Refers to the project being designed or constructed. (see also Subdivision Ordinance)

Director of Engineering Services: The Director of Engineering Services or their authorized representative. (see also Subdivision Ordinance)

Easement: A property right giving an entity other than the owner permission to use a property for a specific purpose stated in the easement document. (see also Subdivision Ordinance)

Emergency Operations: Those operations and repairs necessary to prevent damage or injury and to protect the health or safety of the public or any person and the work necessary to address or prevent an immediate service interruption. Upgrading of facilities, new service installation and neighborhood improvement projects are not emergency operations.

Engineer, Owner's Engineer, Design Engineer: The Engineer or its duly authorized representative means the Engineer of the Owner, who is the Engineer of Record of the Contract Documents.

Equal: Materials, articles or methods that are of equal or higher quality than those specified or shown on the drawings, as determined by the City's sole discretion.

Excavation: Excavation means any activity that removes or otherwise disturbs soil, pavement, driveways, curbs, or sidewalks in the right-of-way or an easement.

100-Year Floodplain: The flood having a one percent (1%) chance of being equaled or exceeded in any given year, based upon a fully developed watershed and the City's criteria to accommodate a 100-year storm in a Major Creek.

Owner: For the purposes of this manual, the term Owner refers to the entity that is financially responsible for developing and maintaining a particular site or project, either the City for public projects or the developer for private projects.

Plan or Plans: The plans are the drawings or reproductions therefrom made by or approved by the Owner showing in detail the location, dimension and position of the various elements of the project, including such profiles, typical cross-sections, layout diagrams, working drawings, preliminary drawings and such supplemental drawings as the Owner's Engineer may issue to clarify other drawings or for the purpose of showing changes in the work hereinafter authorized by the Owner.

Private Facilities or Improvements: Any improvements on private property where a public entity (i.e. the City) is not considered the Owner.

Public Facilities or Improvements: Public facilities and/or improvements include streets (including streetlights, street signs, signals and pavement markings), storm drainage systems, water lines, sanitary sewer lines, pedestrian improvements, or other similar improvements constructed within public right-of-way or easements. Typically, the City maintains public improvements after expiration of any applicable maintenance bonds.

Private Fire Service Main: Pipe and its appurtenances on private property beyond the meter supplying water for fire protection facilities such as automatic sprinkler systems

Private Water Line: Pipe and its appurtenances beyond the meter supplying potable water on private property.

Right of Way or Public Right of Way (ROW): A use of land dedicated by plat or metes and bounds to and for use by the public, which is separate and distinct from the lots and parcel abutting it, and which is not included within the dimensions or areas of such lots or parcels. Generally describes an area used for the provision of streets and utilities. Unless otherwise specified, the term right-of-way shall refer to a public right-of-way.

Specifications or Technical Specifications: Document giving a detailed description of the quantitative and qualitative requirements for products, materials, and workmanship

Utility Easement: A water, wastewater, or reuse water easement granted to the City.

Abbreviations and Acronyms

Wherever the abbreviations defined herein occur in the Engineering Standards, the intent and meaning shall be as follows:

%	Percent
‘	Foot or Feet
“	Inch or Inches
#, lbs	Pound or pounds
AASHTO	American Association of State Highway and Transportation Officials
ACI	American Concrete Institute
am, a.m.	Before noon
ANSI	American National Standards Institute
Asph.	Asphalt
ASME	American Society of Mechanical Engineers
ASTM	American Society for Testing and Materials
APWA	American Public Works Association
AWS	American Welding Society
AWWA	American Water Works Association
B/L	Base Line
cc	Cubic Centimeter
CFR	Code of Federal Regulations
cfs	Cubic feet per second
CI	Cast Iron
C/L	Center Line
cm	Centimeter
CO	Cleanout
Conc	Concrete
Cond	Conduit
Corr	Corrugated
Cu	Cubic
cy, CY,C.Y.	Cubic Yard
DES	Director of Engineering Services
DI	Ductile Iron
Dia	Diameter
Elev	Elevation
F	Fahrenheit
fps	Feet per second
ft	Foot or Feet
Gal	Gallon
g, gm	Gram
HDPE	High Density Polyethylene
HP	Horsepower
hr	Hour
ID	Inside Diameter
in	Inch or Inches
Kg or kg	Kilogram
kPa	Kilopascals
L	Liter
LDPE	Low Density Polyethylene

LF	Linear foot or feet
LL	Liquid Limit
LLDPE	Linear Low Density Polyethylene
LMDPE	Linear Medium Density Polyethylene
m	Meter
Max	Maximum
MH	Manhole
Min	Minimum or Minute
MJ	Mechanical Joint
mm	Millimeter
Mono	Monolithic
mph	Miles per hour
MSS	Manufacturers Standardization Society of the Valve and Fittings Industry
MPa	Megapascal
NACE	National Association of Corrosion Engineers
Nat'l	National
NCTCOG	North Central Texas Council of Governments
NEMA	National Electrical Manufacturers Association
No.	Number
NPT	National Pipe Thread
NRMCA	National Ready-mixed Concrete
NTTA	North Texas Tollway Authority
o.d., OD	Outside Diameter
OSHA	Occupational Safety and Health Administration
oz	Ounce
PCC	Portland Cement Concrete
PI, P.I.	Plasticity Index
pm, p.m.	Afternoon
psi	Pounds per Square Inch
PVC	Polyvinyl Chloride
R	Radius
RAP	Recycled/Reclaimed Asphalt Pavement
RCP	Reinforced Concrete Pipe
RCRA	Resource Conservation and Recovery Act
Reinf	Reinforced or reinforcing
ROW	Right-of-Way
SS	Sanitary Sewer
Sec	Second
S.F. or sf	Square Foot
Sq	Square
SSPC	The Society for Protective Coatings [formerly Steel Structures Painting Council]
Std	Standard
Str	Strength
SWPPP, SW3P	Storm Water Pollution Prevention Plan
SY	Square Yard
TAC	Texas Administrative Code
Tex-###-X	Refer to TxDOT *Manual of Testing Procedures*
TCEQ	Texas Commission on Environmental Quality [formerly Texas Natural Resource Conservation Commission (TNRCC)]
TMUTCD	Texas Manual on Uniform Traffic Control Devices

TxDOT	Texas Department of Transportation
TxDOT Item #	Refer to current TxDOT *Standard Specifications for Construction of Highways, Streets and Bridges*
UL	Underwriter's Laboratory
um,µm	Micrometers
US, U.S.	United States
USACE	United States Army Corps of Engineering
U.S.C.	United States Code
USEPA	United States Environmental Protection Agency
Vert	Vertical
Vol	Volume
Wt	Weight
WW	Wastewater
Yd	Yard